BOILERS

A Guide to the Inspection of
Boilers
for Compliance with
Air Pollution Regulations

Compliance Assistance Program

California Environmental Protection Agency
Air Resources Board

December 1997

ACKNOWLEDGMENTS

We appreciate all the assistance that was given to developing this manual by those within industry and governmental agencies. A special thank you to the following for their special efforts and comments:

James J. Morgester	Chief, Compliance Division, Air Resources Board
Scott Applin	Bay Area Air Quality Management District
Dimitris Argyriou	Dupont Chemical
Chris Berglund	Bay Area Air Quality Management District
Michael Goldman	Santa Barbara Air Pollution Control District
Lawrence Odle	Butte County Air Quality Management District
Brian Pillittere	Tracy Biomass Plant
Carl Plemmons	Pacific Gas & Electric
Paul Reitz	San Luis Obispo Air Pollution Control District
Duane Rolkosky	Cleaver Brooks
Dan Searcy	Ventura County Air Pollution Control District
Pat Tedeschi	Sacramento Metropolitan Air Quality Management District
Dale Wagner	Bay Area Air Quality Management District
	Coen Co.
	Gaylord Container Corp.
	R. F. MacDonald Co.
	Point Mugu Naval Air Station
	County of Sacramento
	Southern California Edison
	Willamette Industries

And thanks to many other district inspectors and industry representatives who provided valuable opportunities and information in the field.

Principal Author

Darrell Hawkins, P.E.

Contributing CARB Staff

Dwane Adams
Ken Bowers, Ph.D.
Peter Dallas
Eric Decetis
Cheryl Hayden
Gary Hunter
Fred Jager, P.E.
Christine McKenzie
Eric Patton, P.E.
RC Smith
Michelle Vale

TABLE OF CONTENTS

BOILERS

100 INTRODUCTION
- 101 Air Resources Board ..... 100 - 1
- 102 Compliance Assistance Program ..... 100 - 1
  - 102.1 Target Audience ..... 100 - 3
- 103 Manual Scope and Organization ..... 100 - 3
- 104 Maintenance of Manual ..... 100 - 4

200 STEAM GENERATION
- 201 Introduction to Boilers ..... 200 - 1
- 202 Basic Boiler Operation ..... 200 - 2
  - 202.1 Heat Transfer ..... 200 - 2
  - 202.2 Fire-Tube Boilers ..... 200 - 4
  - 202.3 Water-Tube Boilers ..... 200 - 6
- 203 Parts of the Water Tube Boiler System ..... 200 - 8
  - 203.1 Furnace ..... 200 - 8
  - 203.2 Water Walls ..... 200 - 8
  - 203.3 Steam Drum ..... 200 - 9
  - 203.4 Mud Drum ..... 200 - 9
  - 203.5 Convection Section ..... 200 - 11
  - 203.6 Economizer ..... 200 - 13
- 204 Combustion and Exhaust Systems ..... 200 - 13
  - 204.1 Fuel Supply Facilities ..... 200 - 13
  - 204.2 Combustion Air Supply ..... 200 - 14
    - 204.2.1 Natural Draft ..... 200 - 15
    - 204.2.2 Forced Draft and Induced Draft ..... 200 - 15
    - 204.2.3 Air Preheater ..... 200 - 15
  - 204.3 Fuel and Air Mixing ..... 200 - 17
    - 204.3.1 Gas Burners ..... 200 - 17
    - 204.3.2 Ring Burners ..... 200 - 19
    - 204.3.3 Oil Burners ..... 200 - 21
  - 204.4 Coal-Fired Boilers ..... 200 - 22
    - 204.4.1 Fluidized-Bed Combustion ..... 200 - 22
  - 204.5 Biomass and Wood Waste Combustion ..... 200 - 24
    - 204.5.1 Dutch Oven Pile Burners ..... 200 - 25
    - 204.5.2 Fuel Cells ..... 200 - 27
    - 204.5.3 Spreader Stokers ..... 200 - 27
    - 204.5.4 Suspension Burners ..... 200 - 28
    - 204.5.5 Fluidized Beds ..... 200 - 28
    - 204.5.6 Agricultural Offsets ..... 200 - 28
- 205 Products of Combustion ..... 200 - 29

TABLE OF CONTENTS

206 From the Furnace to the Stack ..... 200 - 29
206.1 Air Preheater ..... 200 - 30
206.2 Flue Gas Treatment Devices ..... 200 - 31
206.3 The Stack ..... 200 - 31
207 Fuel Characteristics ..... 200 - 33
207.1 Gaseous Fuels ..... 200 - 33
207.1.1 Gaseous Fuel Characterization ..... 200 - 34
207.1.2 Natural Gas ..... 200 - 35
207.1.3 Liquefied Petroleum Gas (LPG) ..... 200 - 36
207.1.4 Process Gas ..... 200 - 37
207.1.5 Waste Gas ..... 200 - 38
207.2 Fuel Oils ..... 200 - 39
207.2.1 Particulate Matter ..... 200 - 40
207.2.2 Sulfur Oxides ..... 200 - 40
207.2.3 Nitrogen Oxides ..... 200 - 41
207.2.4 Other Pollutants ..... 200 - 42
207.3 Used Oils ..... 200 - 42
207.4 Subbituminous Coal ..... 200 - 44
207.5 Petroleum Coke ..... 200 - 44
207.6 Biomass Fuel ..... 200 - 45
207.7 Wood waste ..... 200 - 46
208 Specialized Boiler Types ..... 200 - 47
208.1 Enhanced Oil Recovery Boilers ..... 200 - 47
208.2 Cogeneration ..... 200 - 47
208.2.1 California Cogeneration History ..... 200 - 48
208.2.2 Types of Cogeneration ..... 200 - 49
208.2.3 Steam Turbine Topping Cycle Systems ..... 200 - 50

300 AIR POLLUTION CONTROLS
301 Air Emissions ..... 300 - 1
302 NO, NO2, and NOx ..... 300 - 3
302.1 Nitrogen Oxide (NOx) Formation ..... 300 - 3
303 Preventing NOx formation at Combustion ..... 300 - 5
303.1 Fuel Substitution ..... 300 - 5
303.2 Low Excess Air ..... 300 - 6
303.3 Flue Gas Recirculation (FGR) ..... 300 - 7
304 Gas Burners ..... 300 - 9
304.1 Low-NOx Burners ..... 300 - 10
304.2 Staged Fuel Burners ..... 300 - 11
305 Oil-Firing Burners ..... 300 - 13
305.1 Oil Atomization ..... 300 - 13
305.2 Low Excess Air ..... 300 - 14
305.3 Staged Air Combustion ..... 300 - 14
305.3.1 Oil Field Steam Generators ..... 300 - 15

TABLE OF CONTENTS

305.4 Overfire Air ..... 300 - 15
305.5 Burners out of Service ..... 300 - 15
306 Fuel Rate Reduction ..... 300 - 17
307 Flue Gas Treatment to Remove NOx ..... 300 - 17
307.1 Selective Catalytic Reduction (SCR) ..... 300 - 17
307.2 Ammonia Injection Systems ..... 300 - 19
307.3 Selective Non-Catalytic Reduction (SNCR) ..... 300 - 21
308 NOx Reduction in Coal-Fired Boilers ..... 300 - 24
308.1 Fluidized-Bed Combustion ..... 300 - 24
309 Sulfur Oxides (SOx) Control Methods ..... 300 - 24
309.1 Sulfur Content of Fuels ..... 300 - 24
309.2 Fuel Monitoring ..... 300 - 27
309.3 Sulfur Removal During Combustion ..... 300 - 28
309.4 Flue Gas Desulfurization ..... 300 - 28
309.4.1 Spray Tower Scrubbers ..... 300 - 29
309.4.2 Venturi Scrubbers ..... 300 - 31
309.4.3 Slurries and Solutions ..... 300 - 31
309.4.4 Wet Slurry Throwaway Scrubbing ..... 300 - 33
309.4.5 Wet Solution Throwaway Scrubbing ..... 300 - 34
310 Particulate Control ..... 300 - 35
310.1 Fuel Oil Atomization ..... 300 - 35
310.2 Fluidized Bed Combustors ..... 300 - 36
310.2.1 Fluidized Bed Particulate Control ..... 300 - 38
310.3 Baghouses (Multiple Fabric Filters) ..... 300 - 38
310.4 Electrostatic Precipitator (ESP) ..... 300 - 40
310.4.1 Factors Affecting Collection Efficiency ..... 300 - 42
310.5 Loading and Transporting Ash ..... 300 - 44
310.6 Soot Blowing ..... 300 - 44
311 Carbon Monoxide (CO) Control ..... 300 - 44
312 Estimating Emissions ..... 300 - 46

400 CONTINUOUS EMISSION MONITORS
401 Types of CEMs ..... 400 - 1
401.1 In-Situ Monitors ..... 400 - 1
401.2 Extractive Monitors ..... 400 - 3
402 CEM Component Equipment ..... 400 - 6
402.1 Probe ..... 400 - 6
402.2 Sample Line ..... 400 - 7
402.3 Conditioning System ..... 400 - 8
402.4 Analyzer ..... 400 - 10
402.5 Data Recorder ..... 400 - 10
403 CEMs for Boilers ..... 400 - 10
404 Analyzers and Measurement Methods ..... 400 - 10
404.1 Spectroscopic Absorption ..... 400 - 11

TABLE OF CONTENTS

404.2 Luminescence ..... 400 - 11
404.3 Electrochemical Analysis ..... 400 - 14
404.4 Paramagnetism ..... 400 - 16
404.5 Opacity Monitors ..... 400 - 16
404.6 Flow Monitors ..... 400 - 17
404.6.1 Differential Pressure Type Flow Meters ..... 400 - 17
404.6.2 Thermal Sensing Flow Meters ..... 400 - 19
404.6.3 Acoustic Velocimetry ..... 400 - 20
405 Operation and Maintenance of CEMs ..... 400 - 21
405.1 Calibration ..... 400 - 22
405.2 Sample Line Leakage ..... 400 - 23
405.3 Cleaning Optical Lenses ..... 400 - 24
406 Inspecting CEMs ..... 400 - 25
406.1 Tour the CEM Installation ..... 400 - 25
406.1.1 Umbilical Lines and Electrical Cables ..... 400 - 26
406.1.2 Gas Conditioning System ..... 400 - 27
406.1.3 Control Panels ..... 400 - 28
406.2 Operational Procedures ..... 400 - 30
406.3 Review Records and Data ..... 400 - 30
407 Regulations ..... 400 - 31
407.1 Monitoring Requirements ..... 400 - 31
407.2 Performance Specifications ..... 400 - 32
407.3 Quality Assurance ..... 400 - 33
407.4 CEM Reporting Requirements ..... 400 - 34
407.5 Enforcement Using CEM Data ..... 400 - 34

500 LEGAL REQUIREMENTS
501 Types of Regulations ..... 500 - 1
501.1 Rule Exemptions ..... 500 - 3
502 Pollutant Emission Limitations ..... 500 - 3
502.1 Nitrogen Oxides (NOx) ..... 500 - 3
502.1.1 Biomass Boilers ..... 500 - 7
502.1.2 Oil Recovery Steam Generators ..... 500 - 7
502.2 Sulfur Oxides (SOx) ..... 500 - 7
502.2.1 Oil Recovery Steam Generators ..... 500 - 9
502.3 Carbon Monoxide (CO) ..... 500 - 9
502.4 Visible Emissions (Smoke) ..... 500 - 9
502.5 Particulate Matter Emissions ..... 500 - 11
502.6 Odors ..... 500 - 12
502.7 Fugitive Dust Emissions ..... 500 - 13
502.8 Toxic or Hazardous Emissions ..... 500 - 13
502.9 Used Oils ..... 500 - 13
502.10 Continuous Emission Monitors (CEMs) ..... 500 - 14
503 Operational Requirements ..... 500 - 15

TABLE OF CONTENTS

503.1 Permit Conditions ..... 500 - 15
Example Permit Conditions - Emissions Limits ..... 500 - 16
Example Permit Conditions - Equipment ..... 500 - 16
Example Permit Conditions - Operation ..... 500 - 17
Example Permit Conditions - Monitoring ..... 500 - 18
Example Permit Conditions - Compliance Testing ..... 500 - 18
Example Permit Conditions - General ..... 500 - 19
504 Equipment Breakdown Provisions ..... 500 - 20
504.1 Variances ..... 500 - 22
505 Health and Safety Code ..... 500 - 24
39000 LEGISLATIVE FINDINGS - ENVIRONMENT ..... 500 - 26
39001 AGENCY COORDINATION ..... 500 - 27
39002 LOCAL AND STATE RESPONSIBILITIES ..... 500 - 27
39003 ARB RESPONSIBILITIES ..... 500 - 27
40000 LOCAL/STATE RESPONSIBILITIES ..... 500 - 28
40001 ADOPTION OF REGULATIONS ..... 500 - 28
40702 ADOPTION OF RULES AND REGULATIONS ..... 500 - 29
40823 HEARINGS - 10 DAYS NOTICE ..... 500 - 29
40824 REASONABLE NOTICE - INTERIM VARIANCE ..... 500 - 30
40825 10 DAY NOTICE - 90 DAY VARIANCES ..... 500 - 30
40826 30 DAY NOTICE - REGULAR VARIANCES ..... 500 - 31
41509 POWER TO ABATE NUISANCE ..... 500 - 31
41510 RIGHT OF ENTRY ..... 500 - 32
41700 PUBLIC NUISANCE ..... 500 - 32
41701 RINGELMANN / OPACITY STANDARDS ..... 500 - 33
42300 DISTRICT PERMIT SYSTEM ..... 500 - 33
42301 REQUIREMENTS FOR PERMIT ISSUANCE ..... 500 - 34
42303 INFORMATION DISCLOSURE ..... 500 - 35
42303.5 FALSE STATEMENTS ..... 500 - 35
42304 FAILURE TO SUPPLY INFORMATION ..... 500 - 36
42350 APPLICATIONS FOR VARIANCE ..... 500 - 36
42351 INTERIM VARIANCE APPLICATIONS ..... 500 - 36
42351.5 INTERIM SCHEDULE MODIFICATION ..... 500 - 37
42352 VARIANCE ISSUANCE REQUIREMENTS ..... 500 - 37
42353 OTHER REQUIREMENTS ..... 500 - 38
42354 PRESCRIBING REQUIREMENTS ..... 500 - 38
42355 HEARING BOARD BOND REQUIREMENTS ..... 500 - 39
42356 HEARING BOARD VARIANCE MODIFICATION ..... 500 - 39
42357 HEARING BOARD REVIEW OF SCHEDULE ..... 500 - 39
42358 EFFECTIVE PERIOD OF ORDER ..... 500 - 40
42359 PUBLIC HEARING REQUIREMENTS ..... 500 - 40
42359.5 EMERGENCY VARIANCES ..... 500 - 40
42360 COPY OF VARIANCE ORDER TO ARB ..... 500 - 41
42361 VALIDITY OF VARIANCE TIME ..... 500 - 41
42362 VARIANCE REVOCATION OR MODIFICATION ..... 500 - 41

TABLE OF CONTENTS

42363 ARB HEARING PRIOR TO ACTION ..... 500 - 41
42364 SCHEDULE OF FEES ..... 500 - 42
42400 GENERAL VIOLATIONS, CRIMINAL ..... 500 - 42
42400.1 NEGLIGENCE, CRIMINAL ..... 500 - 43
42400.2 DOCUMENT FALSIFICATION, CRIMINAL ..... 500 - 44
42400.3 WILLFULLY EMITTING AN AIR CONTAMINANT ..... 500 - 45
42401 VIOLATING ORDER OF ABATEMENT, CIVIL ..... 500 - 46
42402 GENERAL VIOLATIONS, CIVIL ..... 500 - 46
42402.1 NEGLIGENCE OR ACTUAL INJURY, CIVIL ..... 500 - 47
42402.2 DOCUMENT FALSIFICATION, CIVIL ..... 500 - 47
42402.3 CIVIL PENALTIES ..... 500 - 48
42402.5 ADMINISTRATIVE PENALTIES ..... 500 - 48
42403 RECOVERY OF CIVIL PENALTIES ..... 500 - 48
42404.5 STATUTE OF LIMITATIONS FOR CIVIL ACTIONS ..... 500 - 49
42450 ORDERS OF ABATEMENT ..... 500 - 49
42700 MONITORING DEVICES ..... 500 - 50
42701 AVAILABILITY, FEASIBILITY ..... 500 - 51
42702 SPECIFICATION OF PROCESSES ..... 500 - 51
42703 REIMBURSEMENTS FOR TESTING EXPENSES ..... 500 - 52
42704 DETERMINATION OF AVAILABILITY ..... 500 - 52
42705 RECORDS ..... 500 - 52
42706 REPORT OF VIOLATION ..... 500 - 52
42707 INSPECTION; FEES ..... 500 - 53
42708 POWERS OF REGIONAL AUTHORITY ..... 500 - 53

600 INSPECTION
601 Inspection Overview ..... 600 - 1
601.1 Levels of Inspection ..... 600 - 3
602 Pre-Inspection Procedures ..... 600 - 4
602.1 File Review ..... 600 - 4
602.2 Regulation Review ..... 600 - 5
602.2.1 Rule Exemptions ..... 600 - 5
602.3 Equipment Check ..... 600 - 6
602.4 Pre-Entry and Entry ..... 600 - 6
602.5 Pre-Inspection Meeting ..... 600 - 7
603 Facility Inspection Procedures ..... 600 - 7
603.1 Check-in With the Unit Operator ..... 600 - 7
604 Verify Fuel Type ..... 600 - 8
605 Inspection of NOx Control Equipment ..... 600 - 9
605.1 Low Excess Air Operation ..... 600 - 10
605.2 Flue Gas Recirculation (FGR) Inspection ..... 600 - 10
605.3 Inspection of Low-NOx Burners ..... 600 - 12
605.4 Selective Catalytic Reduction (SCR) of NOx ..... 600 - 15
605.4.1 Ammonia Injection Systems ..... 600 - 15

TABLE OF CONTENTS

605.5 Selective Non-Catalytic Reduction (SNCR) of NOx ..... 600 - 16
605.6 Fluidized-Bed Combustion ..... 600 - 16
606 Sulfur Oxide (SOx) Emission Inspection ..... 600 - 18
606.1 Sulfur Content of Fuel ..... 600 - 18
606.2 Wet Scrubber Inspection ..... 600 - 18
606.2.1 Physical Condition of Scrubber ..... 600 - 19
606.2.2 Droplet Entrainment ..... 600 - 19
606.2.3 Static Pressure Drop Across the Scrubber ..... 600 - 19
606.2.4 Gas Outlet Temperature ..... 600 - 20
606.2.5 Gas Flow Rate ..... 600 - 20
606.2.6 Liquor Inlet Pressure ..... 600 - 21
606.2.7 Liquor pH ..... 600 - 21
606.2.8 Liquor Recirculation Rate ..... 600 - 22
606.2.9 Demister Inspection ..... 600 - 22
606.2.10 Inspecting Scrubber Internals ..... 600 - 23
606.3 Petroleum Refinery Boilers ..... 600 - 23
607 Visible Emissions Inspections ..... 600 - 24
607.1 Visible Emissions Certification ..... 600 - 26
607.2 Baghouse Inspection ..... 600 - 26
607.2.1 Pressure Drop ..... 600 - 26
607.2.2 Inleakage of Air ..... 600 - 27
607.2.3 Maintenance Records ..... 600 - 28
607.2.4 Physical Condition - Housekeeping ..... 600 - 28
607.3 Electrostatic Precipitators (ESPs) ..... 600 - 28
608 Post-Inspection Procedures ..... 600 - 29
609 Confidential Data ..... 600 - 29

GLOSSARY

APPENDICES

Appendix A - 40CFR60 Subpart D, Standards of Performance for Fossil-Fuel-Fired Steam Generators for which Construction is Commenced After August 17, 1971

Appendix B - 40CFR60 Subpart Da, Standards of Performance for Electric Utility Steam Generating Units for which Construction is Commenced After September 18, 1978

Appendix C - 40CFR60 Subpart Db, Standards of Performance for Industrial - Commercial - Institutional Steam Generating Units

Appendix D - 40CFR60 Subpart Dc, Standards of Performance for Small Industrial -

TABLE OF CONTENTS

Commercial - Institutional Steam Generating Units

Appendix E - 40CFR60 Appendix A, Test Method 9, Visual Determination of the Opacity of Emissions from Stationary Sources

Appendix F - 40CFR60 Appendix F, Quality Assurance Requirements for Gas Continuous Emission Monitoring Systems Used for Compliance Determination

Appendix G - Equipment Tuning Procedure for Boilers, Steam Generators, and Process Heaters, Rule 4303, San Joaquin Valley UAQMD

Appendix H - Permit Guidelines for Boilers, Process Heaters, and Steam Generators, Santa Barbara County APCD

Appendix I - SOx Emission Factors for Gaseous Fuels and Liquid Fuels, Santa Barbara County APCD

Appendix J - References

INDEX

TABLE OF CONTENTS

LIST OF FIGURES

202.1 Heat Transfer Methods ..... 200 - 3
202.2 Simplified Fire-Tube Boiler ..... 200 - 5
202.3 Simple Water-Tube Boiler ..... 200 - 7
203.1 Water to Steam Circulation Loop ..... 200 -10
203.2 Basic Gas-Fired Water-Tube Boiler ..... 200 -12
204.1 Combustion Air Preheat System ..... 200 -16
204.2 Gas Pre-mix Burner ..... 200 -18
204.3 Ring Type Burner ..... 200 -19
204.4 Ring Type Burner with Oil Gun Inserted ..... 200 -20
204.5 Steam or Air-Atomizing Oil Gun Burner ..... 200 -21
204.6 Circulating Fluidized Bed Type Boiler ..... 200 -23
204.7 Dutch Oven Pile Burner ..... 200 -26

303.1 Flue Gas Recirculation System (FGR) ..... 300 - 8
304.1 Gas Pre-mix Burner ..... 300 - 9
304.2 Low-NOx Burner with Staged Fuel ..... 300 -11
304.3 Low-NOx Burner with Staged Fuel and Internal FGR ..... 300 -12
305.1 Staged Combustion Using Overfire Air ..... 300 -16
307.1 Boiler with Retrofit SCR System ..... 300 -18
307.2 Anhydrous Ammonia Supply System ..... 300 -20
307.3 SNCR (Selective Non-Catalytic NOx Reduction) ..... 300 -22
308.1 Fluidized Bed Type Boiler ..... 300 -25
309.1 Spray Tower SOx Scrubber ..... 300 -30
309.2 Venturi Scrubber ..... 300 -32
310.1 Fuel Oil Burner Tips ..... 300 -37
310.2 Baghouse for Particulate Removal ..... 300 -39
310.3 Electrostatic Precipitator ..... 300 -41

401.1 In-Situ Analyzer ..... 400 - 2
401.2 Basic Extractive Sampling System ..... 400 - 3
401.3 Sample Dilution System ..... 400 - 4
401.4 Dilution Type Sample Probe ..... 400 - 5
402.1 Umbilical Sample Line ..... 400 - 7
402.2 Refrigerated Condenser ..... 400 - 9
404.1 Spectroscopic Analyzer ..... 400 -12
404.2 SO_2 Fluorescence Analyzer ..... 400 -13
404.3 NOx Chemiluminescence Analyzer ..... 400 -14
404.4 Electrocatalytic Oxygen Analyzer ..... 400 -15
404.5 Opacity Analyzer ..... 400 -17
404.6 Type-S Pitot Tube ..... 400 -18
404.7 Annubar Flow Meter ..... 400 -19
404.8 Thermal Sensing Flow Meter ..... 400 -20

TABLE OF CONTENTS

404.9 Acoustic Gas Velocity Meter ..... 400 -21
405.1 Rotameter Type Flow Meter ..... 400 -24
406.1 Calibration Gas Cylinder ..... 400 -27
406.2 Bubbler Type Flow Indicator ..... 400 -28
406.3 CEM Control Panel ..... 400 -29

601.1 Source Testing ..... 600 - 2
605.1 CEM for NOx ..... 600 - 9
605.2 Flue Gas Recirculation (FGR) ..... 600 -11
605.3 Low-NOx Burner System ..... 600 -12
605.4 Flame Observation Window ..... 600 -13
605.5 Firebox Draft Gauge ..... 600 -14
605.6 Ammonia Storage Facilities for SCR ..... 600 -16
605.7 Ammonia Supply Pump Indicator Light ..... 600 -17

LIST OF TABLES

207.1 Example Gaseous Fuel Characterization ..... 200 -38
207.2 Properties of Biomass Materials ..... 200 -46

302.1 Nitrogen Content of Several Fossil Fuels ..... 300 - 4
309.1 Sulfur Content of Various Fuels ..... 300 -26

502.1 New Source Performance Standards for Boilers ..... 500 - 5

100 INTRODUCTION

101 AIR RESOURCES BOARD

The California Air Resources Board (CARB) was created by the California Legislature to control air pollutant emissions and to improve air quality throughout the State. Our mission is to promote and protect public health, welfare and ecological resources through the effective and efficient reduction of air pollutants, while recognizing and considering the effects on the economy of the State. Under direction of the California Environmental Protection Agency (Cal/EPA), CARB works closely with the United States Environmental Protection Agency (EPA) and local air pollution control districts to improve air quality. To meet these goals, CARB:

CARB Responsibilities

- Conducts inspections to ensure compliance with air pollution regulations;
- Develops rules and regulations to assist local air pollution control districts in their efforts to maintain air quality standards;
- Establishes air quality standards which identify acceptable concentrations of specific pollutants which are intended to protect the health of vulnerable members of the general population and to prevent property and crop damage;
- Monitors air quality throughout the State; and
- Evaluates the effectiveness of pollutant control strategies both for automobiles and industrial sources.

102 COMPLIANCE ASSISTANCE PROGRAM

The Compliance Assistance Program (CAP), created in 1988 by CARB, assists local air pollution control districts in conducting more comprehensive, consistent, and accurate facility compliance inspections. The CAP program also provides industry with information and tools, in the form of self-help publications, which clarify compliance requirements and help explain how to stay in compliance with air pollution rules and regulations. CAP also assists industries in establishing

their own compliance inspection programs. By conducting routine compliance inspections, industrial emissions sources can stay in compliance on a daily basis and can thereby avoid costly air pollution violations.

Through the development and distribution of rule-specific publications, CAP creates an effective flow of information in a variety of useful formats. Based on the idea that sources will comply if they can understand what is required of them, CAP publications identify regulation requirements and present them in more readily readable formats.

Publications Formats

Publication formats include:

Handbooks. Easy to read, colorfully illustrated handbooks are developed for the industrial labor force and the interested public. Most can be read in ten minutes or less and most contain helpful self-inspection checklists.

Pamphlets. Quick reference pamphlets are filled with detailed flow charts, checklists and informative diagrams. These are designed for facility managers, plant personnel and industry's environmental managers.

Technical Manuals. Detailed technical inspection manuals (like the one you are reading) are developed for local air pollution control district inspectors and industry's environmental managers. These contain rule information, process descriptions and step-by-step compliance inspection procedures.

Enforcement audits of certain industrial source types (such as solvent degreasers, gasoline vapor recovery systems, and coating of metal parts) show that noncompliance rates can be as high as 50 percent. Noncompliance results in excessive emissions.

Traditionally, CARB has sought to reduce noncompliance rates by providing an adequate deterrent through enforcement action against violators. In addition, CARB now seeks to reduce noncompliance rates and the associated excess emissions by ensuring that source operator knowledge includes:

- A basic understanding of the rules to which the source or product is subject; and

- A basic understanding of how compliance is to be determined.

If California's nonattainment areas are to have any chance of achieving the ambient air quality standards, the excess emissions resulting from noncompliance must be reduced by air pollution control inspectors and industry personnel. Air pollution control inspectors can identify problems for the source operator and propose corrective action, but their periodic visits cannot ensure continuous compliance. Compliance is the job of educated source operators. The goal of the Compliance Assistance Program is thus twofold:

CAP Goals

- To help air pollution control districts develop and maintain inspector knowledge; and
- To encourage industry to do self-inspections for continuous compliance.

102.1 TARGET AUDIENCE

This manual was written primarily for district field operation staff, district permitting staff, and environmental managers, but it may also be useful to other government agencies and industry personnel. It can be used as a reference manual or user's guide and it is designed for easy referencing, reading, and updating. It also contains graphics and illustrations to enhance understanding.

103 MANUAL SCOPE AND ORGANIZATION

After the introduction, Section 200 will discuss basic boiler operation and the components of a boiler system. It will also cover combustion, fuels, and some specialized boiler types. Section 300 will discuss the air pollutant emissions from boilers and the methods used to reduce emissions. Section 400 describes the numerous types of continuous emission monitors (CEMs), their operation and inspection. Section 500 will discuss the many federal, state and local laws which prevent excessive pollution from boilers. And Section 600 provides guidance for inspecting boiler systems for compliance with air quality regulations.

The appendices include References, some applicable federal laws, and boiler tune-up procedures. The Glossary contains important terms from the manual. And an Index helps make the information accessable.

104 MAINTENANCE OF MANUAL

The Compliance Assistance Program welcomes your comments concerning this manual. Your comments and corrections, changes in legal requirements, and new information on equipment and processes will be collected and periodically distributed in an upgrade packet. Only the manual users who return the tracking card located in the very front of the manual will receive an upgrade packet, so be sure to fill out your card and send it in as soon as you receive the manual.

200 STEAM GENERATION

201 INTRODUCTION TO BOILERS

A boiler is an enclosed system of pipes and vessels used to boil water into steam. The steam can then be used for heating, for industrial processing, or for driving a turbine (as in electricity generation). In some cases the steam is used for both process heat as well as to generate electricity, a technique called cogeneration.

Many types of fuels are used to generate steam and the air pollutant emissions from boilers vary with the type of fuel burned. Consequently, the air pollution regulations are often fuel-specific. The method of firing is also dependent on the type of fuel. The fuels most commonly used as a heat source include:

Fuels

- natural gas,
- diesel fuel oils,
- residual fuel oils,
- coal,
- agricultural or forestry waste products (biomass),
- landfill gas, and
- nuclear power

The most common fuel burned in California is natural gas, which accounts for over 80 percent of the steam produced from fossil fuels. A significant amount of residual fuel oil is also burned, followed by biomass fuels, landfill gas, diesel oils and coal. Nuclear power is also common but its air emissions are different from conventional fuel burning emissions. Consequently, nuclear powered boilers are not discussed in this manual.

Utility steam generators generate electricity in large power stations. They are designed to optimize efficiency and generally produce steam at from 2000 to 3800 pounds per square inch (psi).

Industrial boilers supply steam to manufacturing processes. Typically, industrial boilers produce lower pressure steam (150 to 1600 psi) and are designed for high reliability and low maintenance, at minimum cost. They generally burn a fuel which is readily available locally and is inexpensive. These fuels may include natural gas, fuel oils, and process by-products or waste streams. A large number

of these lower pressure industrial boilers are found in the pulp and paper industry, food preparation industry, municipal solid waste reduction industry, petroleum industry, chemical industry, and many other manufacturing operations.

202 BASIC BOILER OPERATION

Two basic designs for boilers are the fire tube and water tube types. In the **fire tube** design, hot combustion gases pass through the inside of heat exchanger tubes, transferring heat out through the tube walls. Water, and eventually steam, are contained outside the tubes by an outer shell. In the **water tube** design, hot combustion gases pass along the outside of tubes, transferring heat into the tubes. Water, and eventually steam, are contained within the tubes.

202.1 HEAT TRANSFER

Boilers are built to transfer as much heat as possible from the burning fuel to the water and steam. This is accomplished by making use of the three heat transfer methods: **radiation, conduction**, and **convection**. These heat transfer methods are illustrated in Figure 201.1.

Radiation

Radiation is the transfer of heat through space from a hot object to a cool one. For example, the sun transfers heat to the earth by means of radiation. The heat is emitted as an electromagnetic wave or vibration and travels until it is absorbed by an object. Many of these electromagnetic waves are visible as light, and the color of the light is an indication of how hot the source is. As fuel is burned in our boiler, an oxygen molecule will combine with a carbon atom in an explosive reaction which heats the new carbon dioxide (CO_2) molecule to very high temperatures. The combustion reaction emits radiant heat waves which are absorbed by the objects around them.

The two heat-absorbing objects of most interest to us are the boiler tubes in the furnace and the nitrogen molecules which enter with the oxygen. The boiler tubes absorb the heat and transfer it to the water and produce steam, that's good! The nearby nitrogen (N_2) molecules also absorb the heat and, if they get near 2800 ^{o}F, can react with oxygen to form nitrogen oxides (NOx), that's not good!

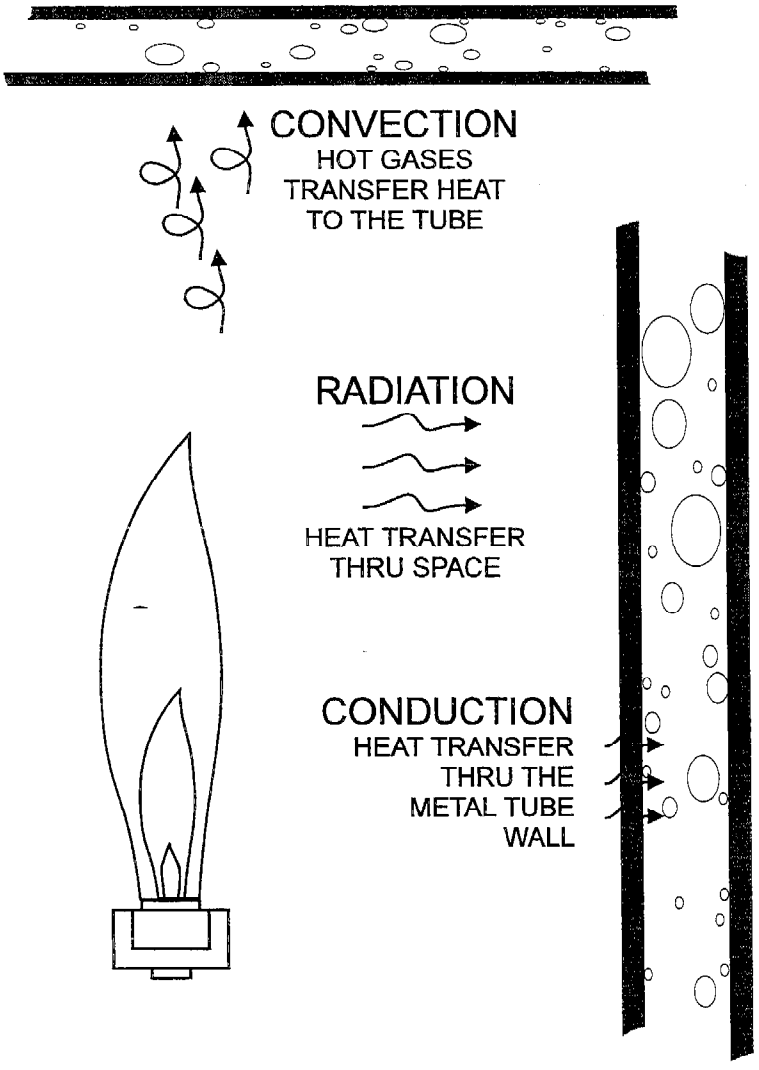

Figure 202.1
Heat Transfer Methods

Heat Transfer

Conduction is heat transfer from a hot object which is touching a cooler object or heat transfer through an object from the hot side to the cooler side. Heat flows from hotter to cooler until there is no temperature difference. The rate of heat transfer increases as the temperature difference increases. Some materials allow heat to pass through more easily than other materials. This is a property called conductivity. Metals are very efficient conductors of heat and are called conductors. In contrast, glass and wood are poor conductors of heat and are called insulators. In a boiler, heat is conducted through the metal tube walls to the water and steam.

Convection is the transfer of heat by a flowing fluid. As the hot gases flow out of the boiler furnace, they flow among more heat exchange tubes. The transfer of heat from the gases as they flow over the tubes is convective heat transfer. This portion of the boiler is also known as the convection section.

202.2 FIRE-TUBE BOILERS

Fire-tube designs are generally found in small or medium sized units. They are used to supply heat to hospitals, commercial buildings, and smaller industries. These boiler packages may include burners, blowers, and other equipment combined into a portable unit, suitable for transportation by truck. The boiler package can then be fabricated in a factory and delivered to a site, thus minimizing installation work, hence the common name "package boiler". Fire-tube designs are available to produce low or high pressure steam, or hot water.

Package Boilers

A fire-tube boiler is a cylindrical vessel, with the flame in the furnace and the combustion gases inside the tubes. The furnace and tubes are within a larger vessel, which contains water and steam. The furnace and the banks of tubes are used to transfer heat to water. Combustion occurs within the furnace and the flue gases are routed through the tubes to the stack outlet.

Figure 202.1 shows a simplified cross section of a fire-tube boiler. The shell of the boiler vessel contains water which is heated to steam at the surface of the heat exchange tubes. A water level is maintained inside the shell to cover the tubes. The steam then rises through the water to the top of the shell vessel and flows up to the steam drum located above the shell. The steam drum allows water droplets to settle out of the steam and drop back into the boiler. The steam drum also serves as a steam storage vessel and as a pressure surge vessel.

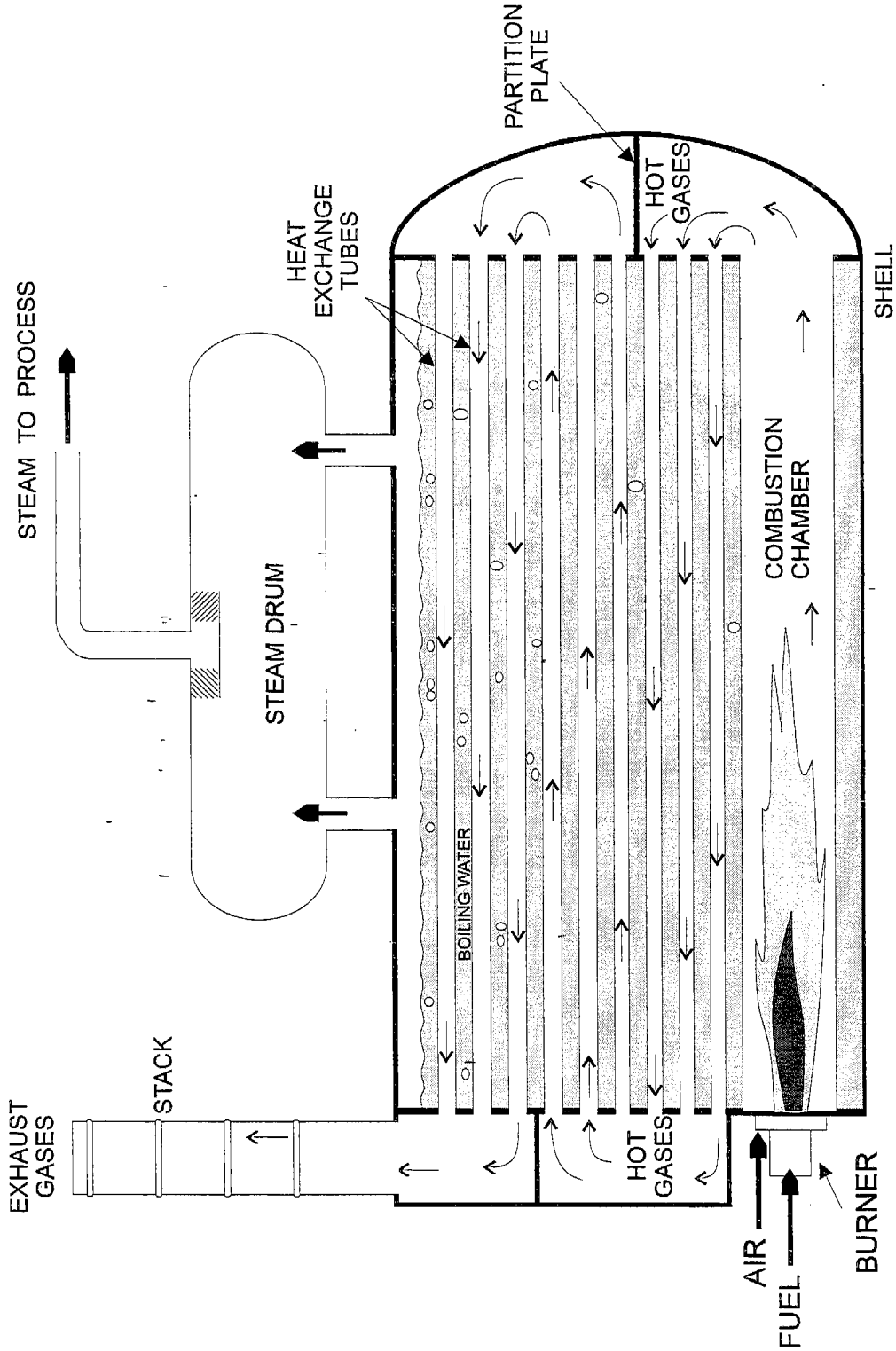

Figure 202.2
Simplified Fire-Tube Boiler

Fuel, usually natural gas or fuel oil, is mixed with air at the burner and ignited in the combustion chamber. The air is often forced in by using an electric fan or blower. The combustion chamber is really an oversized heat exchange tube with enough room for the flame. The hot gases (products of combustion) leave the combustion chamber at the end of the boiler opposite the burner. They are then redirected into heat exchange tubes which pass back through the boiler shell. The gases give up their heat to the tube walls which in turn transfer the heat to the boiling water. The gases are redirected through tubes in the shell several times before exiting to the exhaust stack. Because the hot gases flow through the boiler in Figure 202.1 four times, it is called a four-pass unit.

202.3 WATER-TUBE BOILERS

All large steam generators are the water-tube type, and many smaller package boiler units are also the water-tube type. The larger units are not transportable and are built at the site where the boiler will be operated. Water-tube designs are used when large amounts of high pressure steam are required. Steam pressures can be as high as 5000 psig and temperatures can be as high as 1000 ^{o}F.

Figure 202.2 shows a simplified drawing of a water-tube boiler. Water-tube boilers contain the boiling water inside heat exchange tubes while the flames and hot gases are outside the tubes. The steam generating tubes are installed more or less vertically so that the steam can rise up into the steam drum. In the water-tube design, a level of water is maintained inside the steam drum to assure that the tubes will always be kept full. Water must continuously remove heat from the tubes to prevent overheating and eventual tube rupture. The steam drum also allows water droplets to settle out of the steam, serves as steam storage vessel, and serves as a pressure surge vessel.

While there are many variations in the designs and uses of water-tube boilers, the basic operation of most is similar. Natural gas or oil is introduced to the heater through a burner, where the fuel is mixed with air and ignited. Coal or biomass fuels generally require a more complex fuel supply system such as a moving grate or a fluidized bed to mix the fuel and air during firing.

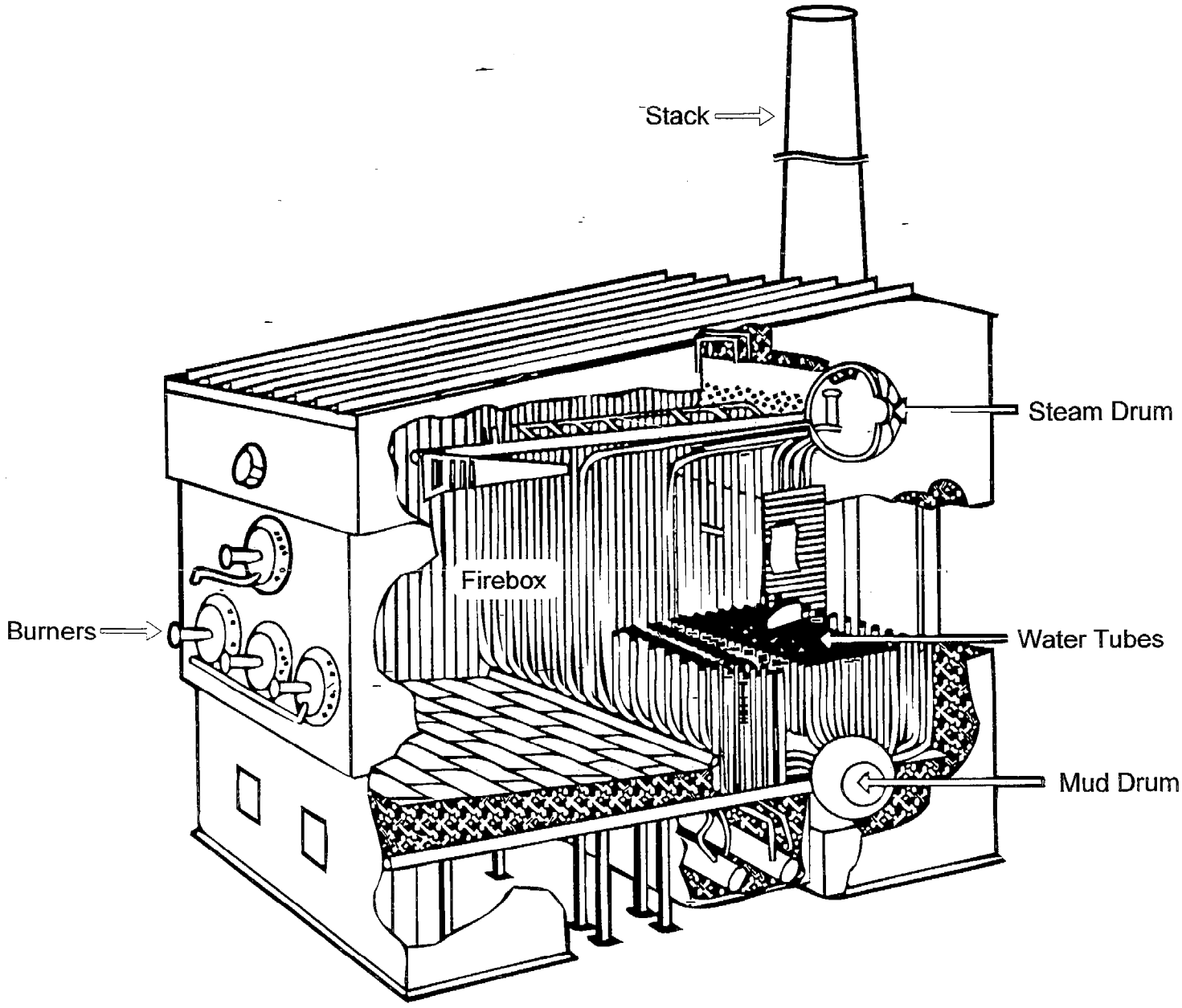

Source: Babcock and Wilcox

Figure 202.3
Simple Water-tube Boiler

The flame then radiates heat to the surrounding tubes which carry the boiling water. This section of the boiler, where the primary method of heat transfer from the flame to the tubes is radiation, is often called the **furnace, firebox**, or **radiant section** of the boiler.

The hot exhaust gases from the radiant section may then be directed to flow over other heat exchange tubes before they are emitted to the atmosphere through the stack. This latter section of heater tubes is often called the **convection section** because the primary method of heat transfer is convection. In this example, convection is the transfer of heat from the hot gas as it passes over cooler heat exchange tubes. A convection section can also be called an economizer. For boilers, convection is usually used to superheat steam, to preheat boiler feedwater, or to preheat combustion air.

203 PARTS OF THE WATER TUBE BOILER SYSTEM

203.1 FURNACE

The furnace is a large open space where the fuel is burned. It allows the flue gas to cool before exiting, because high flue gas temperatures can damage the convection section tubes and cause particle accumulation on the tubes. The size and shape of the furnace are determined primarily by the type of fuel to be burned and by the combustion method. The walls of the furnace are lined in a fireproof material called refractory, often installed in bricks.

203.2 WATER WALLS

Boiler Components

Most large water-tube boilers have tubes that completely surround the furnace. These are often called water walls or fire walls and are exposed to intense radiant heat. It is in these tubes where most of the boiling takes place. The steam bubbles form and rise through the tubes (risers) into the steam drum at the top of the boiler. Water enters the tubes from the "mud" drum (named after sediments which accumulate there) at the bottom of the boiler. The boiling water allows the tubes to remove heat at a rapid rate and prevents the tubes from overheating and rupturing. These tubes also work to protect the walls of the furnace from the intense heat.

203.3 STEAM DRUM

The steam drum is a large cylindrical vessel located at the top of the boiler. In the drum, saturated steam is allowed to separate from the steam-water mixture bubbling up from the boiler tubes. Steam exits from the top of the vessel and water drains from the bottom. The water drains into unheated tubes called **downcomers** and down to a collection vessel called the mud drum (see Section 203.4). From the mud drum, the water flows back up into the boiler tubes. The water level in the steam drum (of a water tube boiler) serves as a reservoir to assure that enough water is in the tubes. Dry tubes will overheat and fail.

Boiler feedwater is introduced to the system at the steam drum. This allows the feedwater to be brought up to boiler operating temperature and prevents cold water from being sent to the water wall tubes. The main components of this water to steam circulation loop are illustrated in Figure 203.1.

Steam drums can be quite large, with diameters of 2 to 6 feet and over 50 feet long. They contain internal baffles, etc. to help separate the steam and water. They also provide some water storage to accommodate system load changes.

Boiler Components

203.4 MUD DRUM

Boiler feedwater first enters at the steam drum, flows through downcomers to the bottom of the boiler, and flows into to a vessel called the mud drum. The mud drum serves as a header to distribute water to the boiler tubes. It is called a mud drum because of the sediments and precipitates which tend to accumulate there. Normally there is a purge stream of water from the mud drum to remove solids and prevent excessive solid buildup.

In many cases, the water will flow by gravity down the downcomer to the mud drum and then up into the boiler tubes to replace the water lost as steam. However, in some larger boilers, the tubes are arranged in complex shapes and patterns in order to maximize coverage and heat absorption from the walls of the furnace. These shapes may interrupt the flow of the water and pumps may be needed to maintain the water circulation.

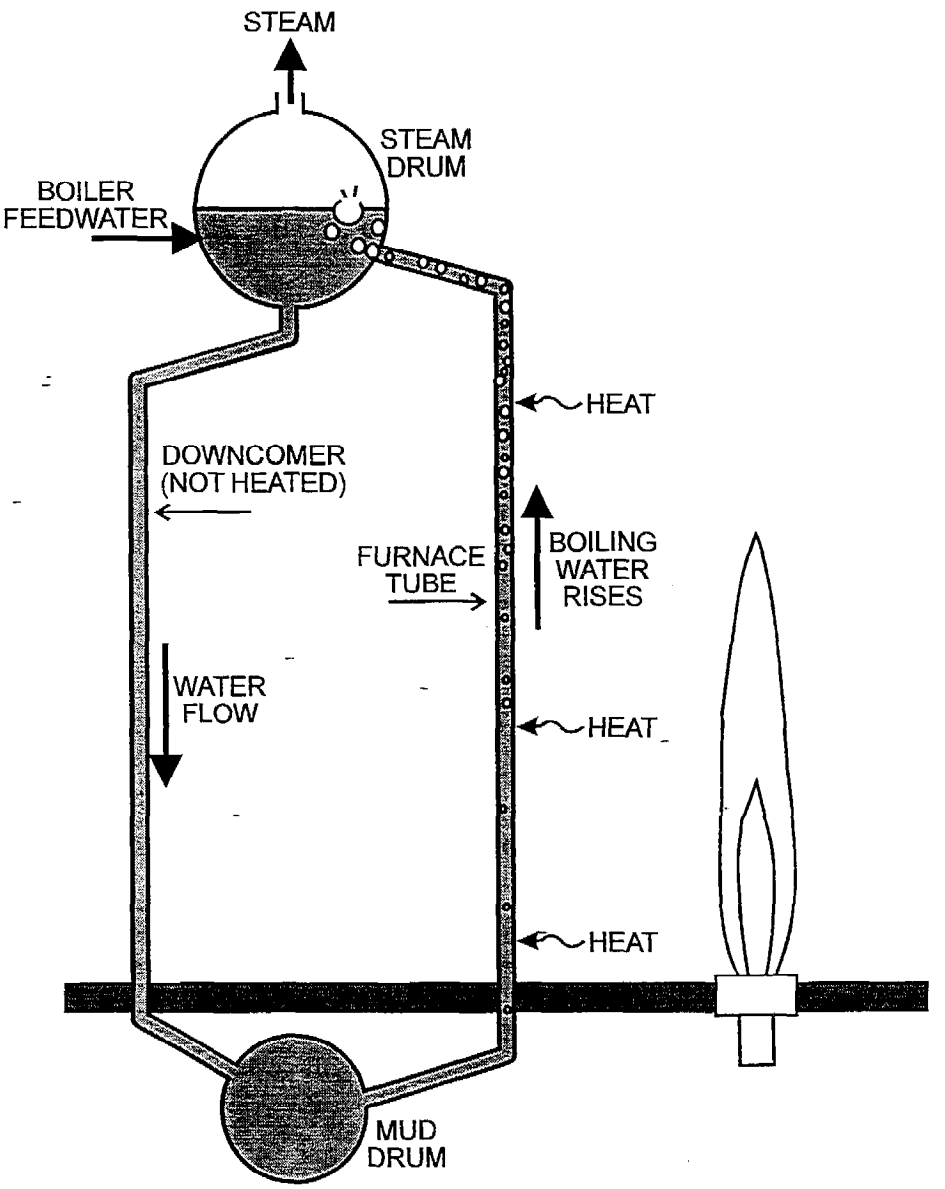

Figure 203.1
Water to Steam Circulation Loop

203.5 CONVECTION SECTION

Boiler Components

As the hot gases (products of combustion) pass out of the furnace, they enter an area designed to recover more of the heat from the gases. The hot gases flow over bundles of tubes and transfer heat to them. This method of transferring heat, by contact with a hot flowing fluid, is known as convection. Consequently, this section of the boiler is known as the convection section. Its common location, above the furnace, is illustrated in Figure 203.2.

One use for the convection section is to heat steam above its dew point, or above the temperature at which it will condense to water. This type of convection section is known as a steam superheater. Steam with a temperature above the dew point is called **superheated steam**. Steam turbines prefer superheated steam because: 1) there are no water droplets present to impinge on and damage the turbine blades, and 2) the efficiency of the recovery of energy from superheated steam is better than that from saturated steam. Steam with a temperature at the dew point is called **saturated steam**. Saturated steam is normally used to supply heat.

Steam Types

The convection section is also used to heat boiler feedwater. Feedwater is heated to near the boiling point before it enters the steam drum. This is called preheating the feedwater.

When burning fuels which produce ash or soot, such as solid fuels and oils, some of the soot will deposit on the boiler tubes, especially in the convection section. This ash buildup inhibits the transfer of heat to the tube and the boiling water or steam. Heat is then lost out of the stack and less steam is produced. Therefore, additional fuel must be burned to make up for the lost steam production.

To reduce this loss of heat, the soot must be removed periodically. This is accomplished by blowing the soot off with steam. This process is known as **soot blowing**. As the dust is blown from the tubes, it reenters the gas stream and can often be seen as a puff of smoke from the stack. In most cases, soot blowing can be accomplished fairly quickly without violation of the three minute limit in the visible emission standards. Some district rules provide a short term exemption for soot blowing.

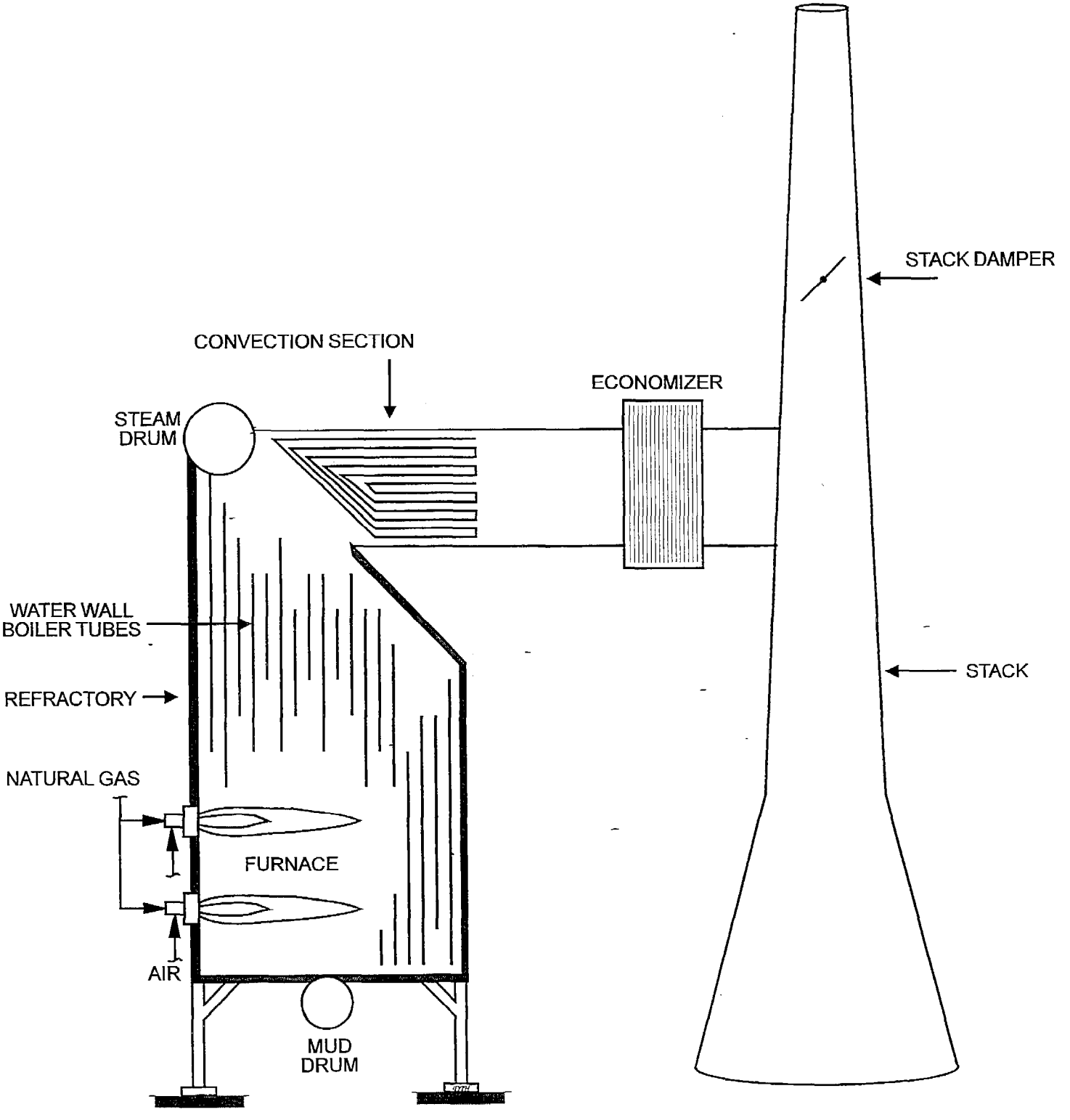

Figure 203.2
Basic Gas-Fired Water-Tube Boiler System

203.6 ECONOMIZER

Downstream from the main convection section, there is sometimes a smaller convection unit used to absorb the last bit of usable heat from the flue gas. This low temperature heat recovery unit may be called the "economizer" and is most often used to preheat fresh boiler feedwater. The heat recovery of the economizer is limited by flue gas temperature limits. The flue gas should not be cooled too much, or corrosive liquids may condense and attack the metal in the economizer, ductwork and stack. Also, as condensation takes place, solids may precipitate and cause deposits and plugging. Solid deposits on the economizer tubes will also reduce heat recovery and may disable the economizer.

204 COMBUSTION AND EXHAUST SYSTEMS

The combustion/exhaust system consists of facilities to supply air and fuel, mix and combust them, and then route the flue gases through various equipment to the stack. The most basic boiler combustion system (rare in today's world of energy conservation and pollution control) combines natural gas and ambient air at the burner, combusts them in the furnace, and passes the flue gases through the convection section and up the stack, as shown in Figure 203.2.

The properly performing fuel combustion and exhaust system performs the following functions:

- delivers fuel to the boiler
- delivers air to the boiler
- preheats the air (optional)
- mixes the fuel and air
- ignites the fuel/air mixture
- controls the flame and hot gases
- routes the hot combustion gases from the furnace to the stack
- emits flue gases to the atmosphere
- keeps air pollution to a minimum

Combustion

204.1 FUEL SUPPLY FACILITIES

The simplest fuel supply facilities are often used for facilities burning **natural gas**. Typically, the gas is piped from the commercial supply to the boiler. A pressure control valve reduces the gas pressure to a safer level (to about 15

psig). An emergency shutdown valve is located just before the gas enters the boiler. This valve is activated when unsafe conditions occur in the boiler, such as loss of flame.

LPG fuel supply facilities might be similar, except that a pressurized storage tank is necessary. A small fuel vaporizer (heater) may also be installed to ensure that the LPG is completely vaporized before burning. Process gas and waste gas facilities may also have fuel gas treatment and/or knock out drums to remove entrained liquids.

Fuels

Distillate fuel oil supply systems are rather simple. They typically include a storage tank, a supply pump, a pressure control valve, and a fuel shutoff valve.

Residual fuel oils usually require a heating system to make the thick oil flow more easily and allow pumping. They typically also include a storage tank, a supply pump, a pressure control valve, and a fuel shutoff valve.

Solid fuels such as coal or biomass materials can require extensive preparation systems. Coal is often pulverized into granules which burn more easily and completely. Biomass materials must often be shredded or crushed to improve combustion. After preparation, the fuel can be transported by conveyor or truck, or slurried with air or water and piped to the boiler. Solid fuel supply systems can often be sources of dust and visible emissions.

204.2 COMBUSTION AIR SUPPLY

During combustion of a simple hydrocarbon fuel (methane, CH_4, for example), each carbon atom combines with two oxygen atoms to form carbon dioxide (CO_2) and two hydrogen atoms combine with one oxygen atom to form water (H_2O). If all of the carbon and hydrogen have been converted to CO_2 and H_2O after combustion is complete and there is no oxygen left over, the amount of oxygen consumed is known as the theoretical or stoichiometric amount. This can also be called "perfect" combustion.

Excess Air

In the real world, the amount of oxygen necessary to completely burn a fuel is slightly more than the theoretical amount, usually 2% or more. This **excess air** and is a key parameter in figuring combustion efficiency. If an air/fuel mixture has insufficient air (too much fuel) for complete combustion, this is called a rich air/fuel mixture. If an air/fuel mixture has more than the necessary amount of air for complete combustion, this is called a lean air/fuel mixture.

204.2.1 Natural Draft

As gases are heated, they tend to expand, and if the pressure stays constant, the density of these gases decreases and the gases tend to rise. In a heater and stack, the hot gases rise up the stack and cause a slight vacuum near the base of the heater. It is this small vacuum in the firebox which sucks air in through the secondary burner ports and through any other openings such as air leaks in the skin or joints of the firebox. This tendency for hot flue gases to flow upward through the stack and draw air into the firebox is known as **natural draft**. On the simplest boilers, ambient air for combustion is allowed to flow directly into the burner or furnace by natural draft.

Draft is measured in inches of water (usually about 1/2 inch of water vacuum). A simple slide plate or louver is opened or closed to control air flow into the burner area.

Air Supply

204.2.2 Forced Draft and Induced Draft

The addition of pollution reduction equipment and/or energy saving equipment usually will interrupt natural draft. In these cases, fans can be installed to push the incoming air, the outgoing stack gases or both. The use of a fan on the inlet air is known as **forced draft** and the use of a fan on the outlet flue gases is known as **induced draft**.

When a forced draft fan is used, a supply duct delivers the pressurized air. The air is ducted to a box (or boxes) located on the side (or bottom) of the boiler and located adjacent to the burners. This air supply box is called the **wind box** and the fan is often called a forced draft fan or blower. These components are shown in Figure 204.1.

204.2.3 Air Preheater

When cold ambient air flows into a boiler furnace, it absorbs heat until it reaches the furnace temperature. Heating this air can be very expensive due to fuel costs, especially in large boilers. To conserve fuel, the air is often routed through an

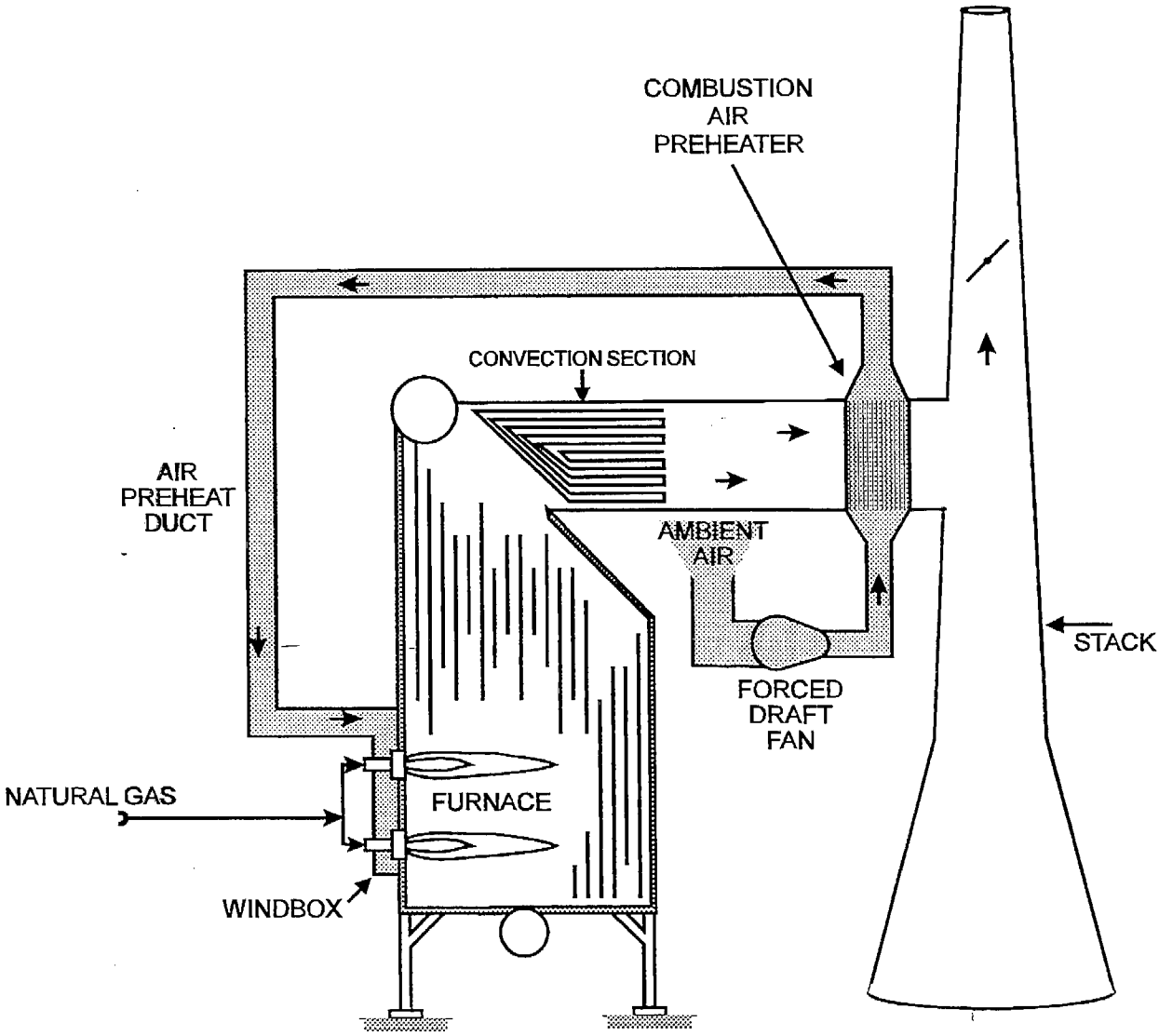

Figure 204.1
Combustion Air Preheat System

air preheater. Hot exhaust gases flow through the air preheater before they flow up the stack. The preheater allows the heat in these hot exhaust gases to be transferred to the inlet combustion air.

The exhaust gases cool as they give up heat in the air preheater. If the exhaust gases cool too much, vapors such as sulfuric acid and nitric acid may begin to condense in the preheater and cause corrosion damage. Consequently, a lower temperature limit (usually about 400 ^{o}F) is placed on the exhaust gases to prevent this condensation and corrosion. The net result is a limit on the amount of heat available to preheat the combustion air.

Air preheat is necessary to burn many solid fuels, especially moist biomass materials. The heat is necessary to remove some of the moisture and to begin heating the fuel to combustion temperature. Even with pulverized coal, it is usually necessary to preheat the combustion air to assure complete combustion in the furnace and to prevent carry over of unburned fuel into the convection section and stack.

Air Supply

204.3 FUEL AND AIR MIXING

The fuel is introduced to the boiler firebox through a **burner**. The burner admits air and fuel into the firebox in a controlled way to ensure safe and efficient combustion. The burner design controls the mixing of the air and fuel, determines the size and shape of the flame, and influences flame temperature. The burner is designed to mix the fuel and air rapidly to produce a stable flame with complete combustion, and should also minimize the formation of NOx emissions.

204.3.1 Gas Burners

Conventional gas burners were generally the "**premix**" type. The air and fuel are mixed within the premix burner before they are introduced to the firebox and ignited. A premix burner is illustrated in Figure 204.2. The air which initially mixes with the fuel is called the primary air. A small amount of additional air (secondary air) is often added near the burner tip to ensure complete combustion.

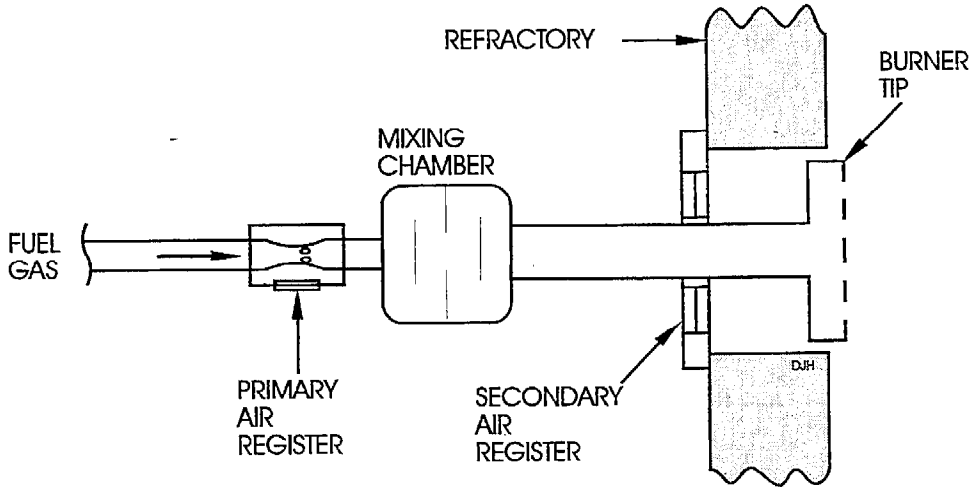

Figure 204.2
Gas Pre-mix Burner

Many modern burner types (discussed in Section 303, NOx Reduction) are not the premix type. Most reduce NOx production during combustion by slowly introducing the fuel to the firebox in stages, by automatically recirculating firebox gases, or both. Most burners in California furnaces are now the new low-NOx type. This technology is advancing and being used by many industries.

Gas Burners

When primary air and fuel gas are mixed prior to combustion, a compact blue flame is formed and the flame temperature is typically high. When the fuel and air enter the furnace without having been well mixed, a lazier yellow flame is formed and the flame temperature is lower. This flame characteristic will be helpful when inspecting premix burners and low-NOx burners.

204.3.2 Ring Burners

The ring type burner is popular and allows the flexibility to burn gas and then switch to fuel oil if necessary. Gas enters through a large circular ring at the burner throat, as illustrated in Figure 204.3. Air from the windbox passes into the throat and curved vanes cause the air to swirl through the center of the gas ring. The swirl improves gas/air mixing and provides for a steady flame.

To switch to oil, the gas is turned off and an oil lance or gun is inserted through the ring, several inches farther into the furnace, as shown in Figure 204.4. Oil is sprayed through the gun and ignited. The air supply is similar for both gas firing

Gas Burners

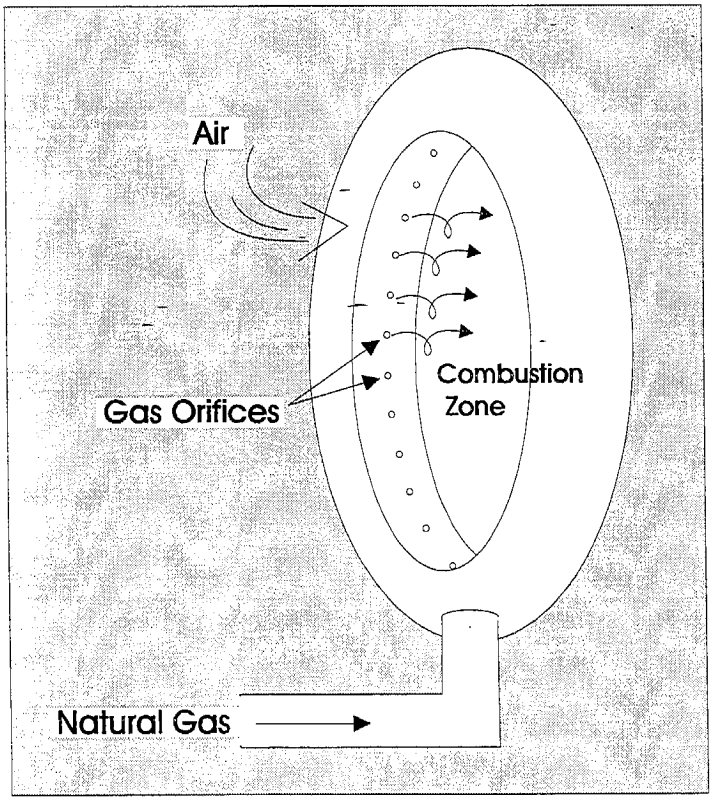

Figure 204.3
Ring Type Burner

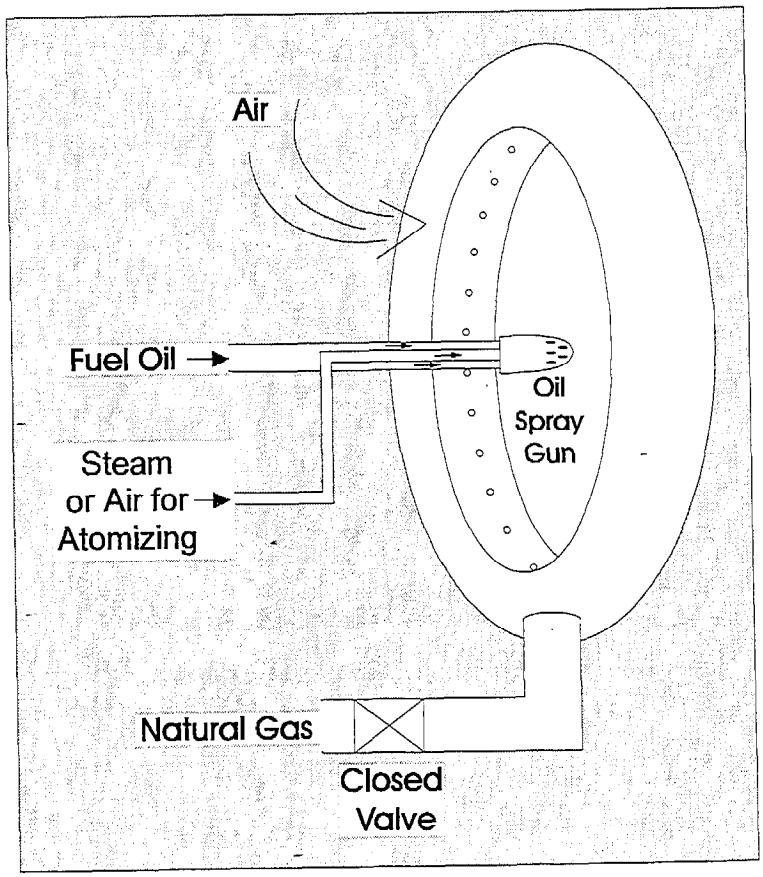

Figure 204.4
Ring Type Burner
with Oil Gun Inserted

Gas Burners

and oil firing. To switch back to gas, oil supply is stopped and the fire extinguished. The oil gun is removed to protect it from the heat and the furnace is fired again with natural gas.

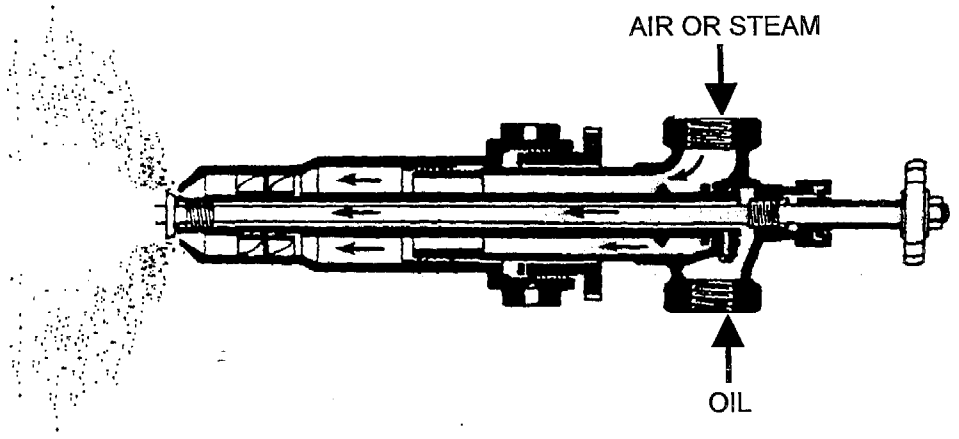

Figure 204.5
Steam or Air-Atomizing
Oil Gun Burner

204.3.3 Oil Burners

Although most boilers in California burn natural gas instead of fuel oils, many are equipped to burn oils, either as a supplementary or as a backup fuel. Many of these facilities convert to oil firing mode by inserting a burner tip designed for oil into the center of the gas burner as shown in Figure 204.4. This tip, or **oil gun** as it is called, extends into the furnace beyond the gas burning components so as not to damage them. The oil gun is then removed when gas firing is desired. An oil gun burner tip is illustrated in Figure 204.5.

Oil Burners

To assure complete combustion in the furnace, fuel oils must be **atomized** into a mist of droplets at the burner tip. The fuel is atomized to increase its surface area, which increases the rate of vaporization and allows oxygen to contact and react with the fuel rapidly. The atomizing spray also promotes mixing of fuel and oxygen.

Air, steam, and mechanical methods are used to improve atomization of fuel oil . Air and steam are commonly used and can often be used interchangeably in the same oil gun. At the tip of the oil gun, a high velocity jet of air or steam blows the oil into a mist through one or more orifices. The orifice size and orientation, as well as the fluid pressures, affect the spray pattern and the flame shape.

Air atomization is commonly used on package boilers. Atomization of lighter distillate fuel oils (e.g. diesel) can be accomplished easily using air, and package boilers often burn diesel, especially as a backup fuel for natural gas. Small air compressors used for atomization are relatively inexpensive and reliable.

204.4 COAL-FIRED BOILERS

Coal

Coal supplies about one third of the world's energy and is the most common fossil fuel for utility and industrial power generation. California however, has very few coal reserves and relies more on natural gas and oil. Some coal-fired boilers do operate in the State and these account for about 5 percent of California's boiler-related emissions. Most of the coal is petroleum coke, a by-product of the oil refining industry, or is low sulfur subbituminous coal shipped in by train from the Rocky Mountain states. The coal is generally burned in fluidized bed combustors which produce steam both for electricity generation and for use in an industrial process. This use of steam for both electric power and process needs is called cogeneration. There are about twenty facilities that burn pulverized coal in fluidized bed combustors in California.

There are several methods of coal combustion, other than fluidized bed combustion, which are not popular in California because they typically produce too much air pollution. These methods include pulverized coal burners, cyclone furnaces, and stokers. Because they are not applied to coal use in California, these methods are not discussed here. Stokers, however, are used extensively in the biomass industry and will be discussed with biomass firing methods.

The primary environmental concerns in selecting a combustion method are: formation and emission of pollutants, how to encourage complete and efficient combustion, and how to handle the inert materials in the fuel (such as ash or particulates.)

204.4.1 Fluidized-Bed Combustion

A fluidized bed starts as a bed of sand and/or crushed limestone. Air is blown up through the sand until the sand begins to boil like a fluid. Pulverized coal is then added to the fluidized bed and burned. The air which fluidizes the bed is also the combustion air and the fluidization serves to mix the air with the fuel. One type of fluidized bed combustor is illustrated in Figure 204.6.

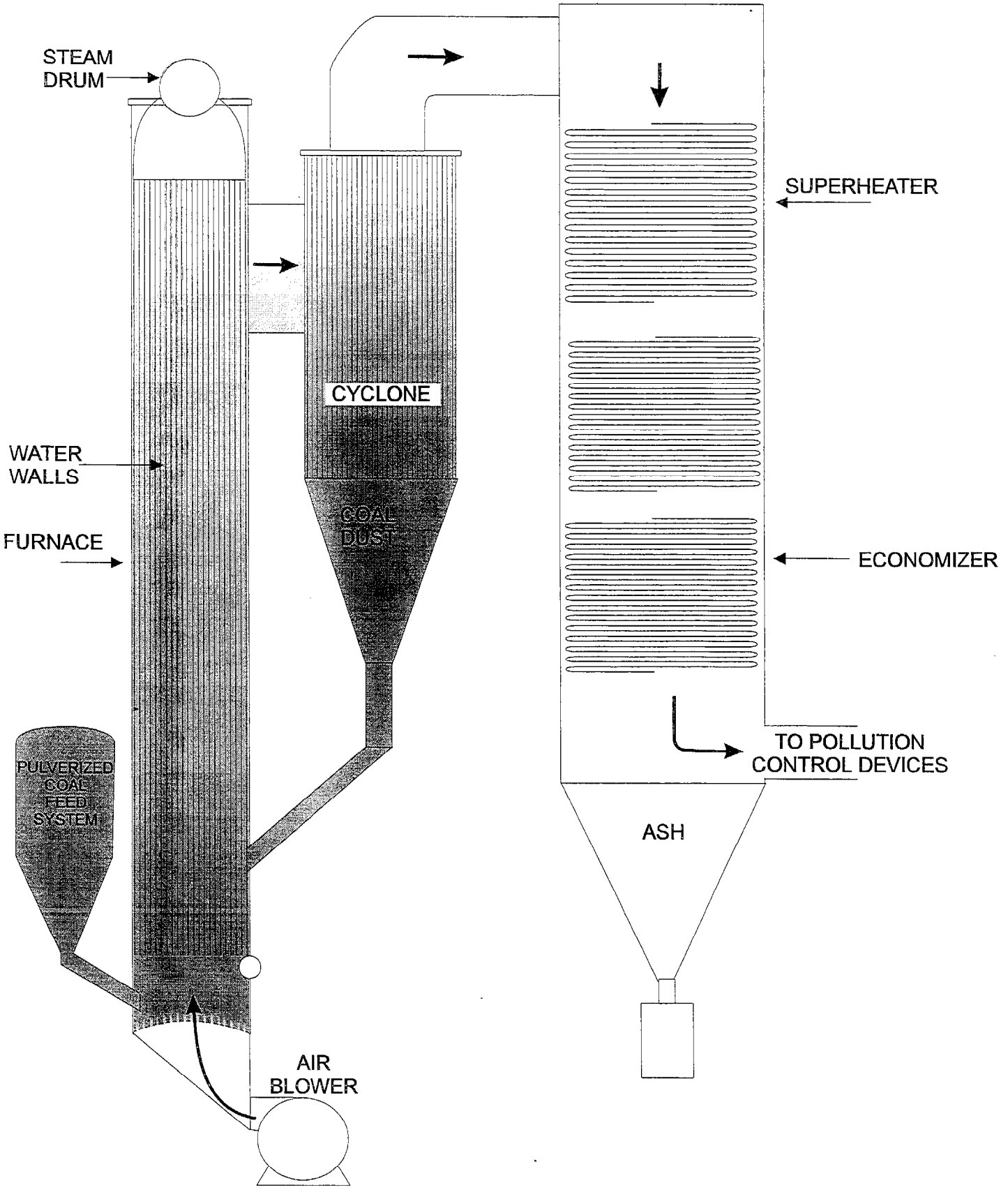

Figure 204.6
Circulating Fluidized Bed Type Boiler

The bed of sand or limestone can reduce pollutants in two important ways. First, the bed is a large inert heat sink which keeps the temperature in the combustion zone at about 1500 °F to 1600 °F. In comparison, combustion temperatures from pulverized coal burners and stokers reach 3000 °F. The lower temperature inhibits the thermal formation of nitrogen oxides (NOx).

The fluidized bed also makes it possible to absorb some of the sulfur compounds and reduce SOx emissions. Most coals, including the low sulfur subbituminous coals from the Rocky Mountains, contain enough sulfur to cause SOx emissions problems when they are burned. By using a bed of crushed limestone instead of sand, the sulfur is absorbed into the limestone and SOx emissions are reduced.

Fluidized bed combustion does produce sand or limestone dust particles in the flue gas. These particulates must be removed, usually by a baghouse filter system or by an electrostatic precipitator.

204.5 BIOMASS AND WOOD WASTE COMBUSTION

Biomass includes wood wastes, vine clippings, leaves, grasses, tree clippings, nutshells, rice hulls, sugar cane (called bagasse after the sugar is extracted), and many other by-products of farming and the food industry. Wood and other biomass materials were once primary fuel sources for many industries. By the end of the nineteenth century, the use of coal, oil, and gas had become popular and biomass fuels began to be phased out. Some industries however, such as lumber and paper, have continued to use biomass fuels.

Biomass

Recently, there has been a trend to turn back to biomass as a fuel source. There are several reasons for this, including the rising costs of oil and gas, technical advances in combustion techniques, increases in waste disposal costs, environmental concerns with agricultural open burning, and incentives to develop cogeneration facilities.

There are many methods to burn biomass fuels. The best known and most successful methods include:

- Pile burners
- Spreader stokers
- Suspension burners
- Fluidized bed systems

Pile burners, which include dutch ovens and fuel cells, burn the fuel in a thick pile or bed. Spreader stokers throw or blow the fuel across the furnace, where some of it burns in suspension and some falls to a grate and is burned. Suspension burners blow finely ground fuel into the furnace where it burns in suspension. And fluidized bed systems burn fuel in a heavily aerated bed of noncombustible material such as sand or crushed limestone. Each method has advantages and disadvantages with regard to fuel handling, combustion flexibility, emissions and economics.

204.5.1 Dutch Oven Pile Burners

The dutch oven is a common method of incinerating wood and bark, which was popular prior to 1950. The traditional dutch oven consists of a large rectangular box lined with a fire brick refractory. The oven box is then connected to a conventional water tube boiler system. Hogged (chopped up) wood waste is fed through an opening in the roof and burns in a pile on the floor grating. The hot combustion gases flow into the main boiler section.

Biomass Burners

Advantages include the ability to burn relatively moist fuels (up to 60% moisture by weight), and a low sensitivity to minor interruptions in fuel supply. Disadvantages include the inability of the combustion system to respond quickly to changes in steam demand, and the fact that most oven cells must be shut down to remove ash manually. And because of the massive brick refractory, they are expensive to build.

By design, the dutch oven allows for staged combustion. Incomplete combustion occurs in the oxygen deficient pile zone. Overfire air is introduced around the periphery of the oven or as the gases are exiting the oven and entering the boiler (see Figure 204.7). As the fuel pile becomes thicker, the flow of underfire air through the pile is restricted. Early pile burner designs had problems maintaining a proper underfire air supply rate as the bed thickness changed. In newer units, underfire air is often preheated to 300-600 ^{o}F and enters under the grate and/or around the pile from ports positioned in the lower walls. This modification helps to eliminate underfire air problems. Newer designs also allow better control of the combustion rate in response to changes in steam requirements.

Dutch ovens work best if a stable combustion rate is maintained. Hogged fuel less than 3 inches in size and containing up to 50% moisture is recommended. This design works well if not fired at a high rate and there is little fluctuation in

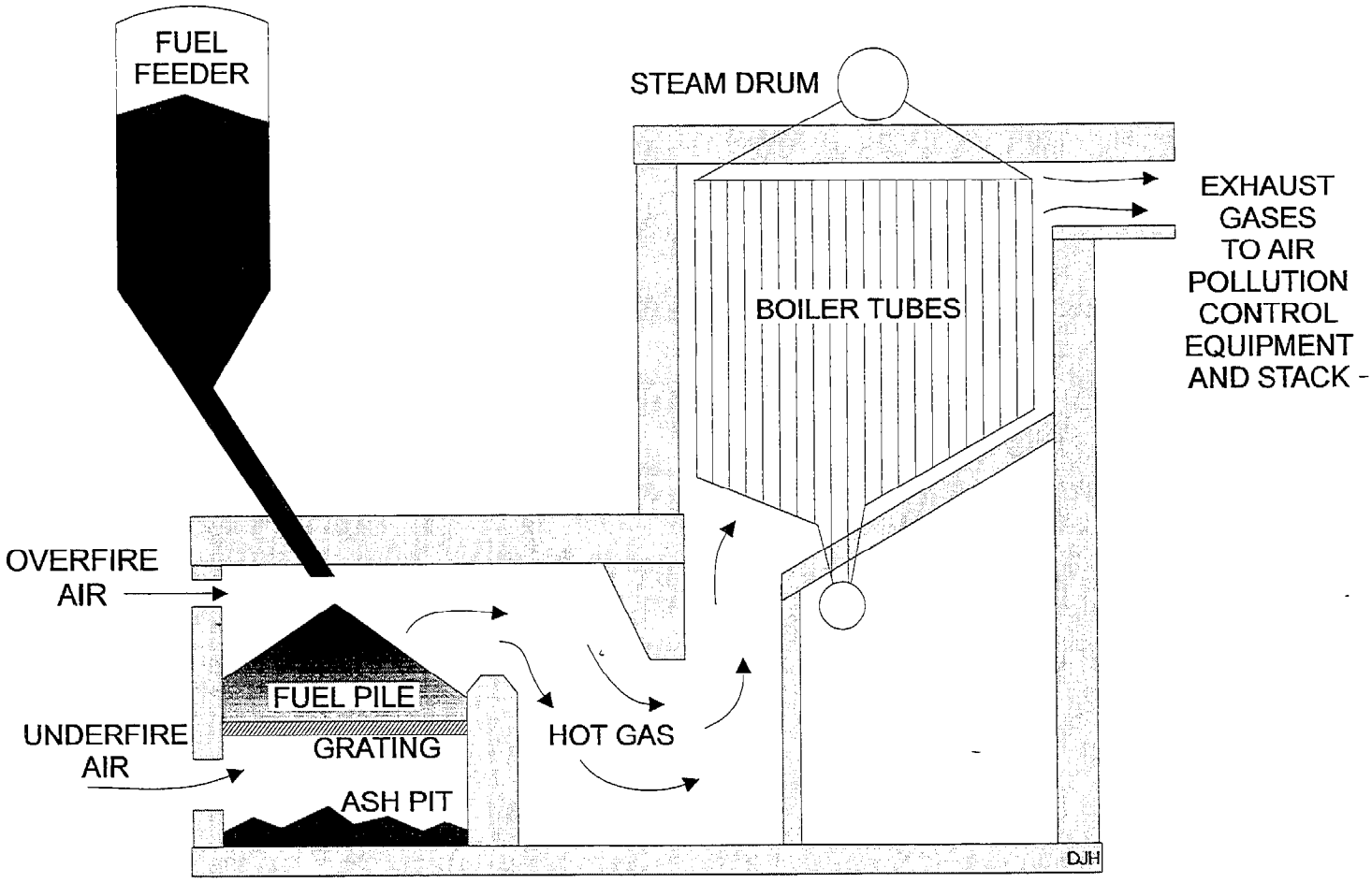

Figure 204.7
Dutch Oven Pile Burner

Biomass Burners

steam demand. Most dutch ovens contain multiple cells, each with a separate fuel pile. This design allows for one section to be cleaned without shutting down all steam generation.

Dutch oven designs can include water-cooled side walls, floor and roof. Some designs also include a water-cooled grate and steam nozzles to facilitate ash removal.

204.5.2 Fuel Cells

Another pile burner is the fuel cell. Fuel cells differ from dutch ovens in that hot flue gas exits above the pile rather than through the back or side. Fuel cells offer the same advantages as dutch ovens without the massive brick refractory. Most fuel cells employ a water-cooled grate and thus bed temperatures are somewhat moderated. Some include provisions for continuous ash removal.

Fuel cells usually consist of factory assembled components and can be installed quickly and expanded in a building block fashion. Steam output is limited to 100,000 pounds per hour. These units, because of their lower cost and pre-engineered packaged designs, are receiving increased attention by California biomass-fueled project proponents. The designs usually incorporate cyclones or other particulate removal devices as part of the pre-engineered package.

204.5.3 Spreader Stokers

Biomass Burners

Spreader stokers are favored in most applications primarily because of their ability to respond to load variation quickly without upsetting the combustion system. Stable combustion is extremely important from both operational and air quality standpoints. Generally, whether designed with a fixed sloping grate or a moving grate, most spreader stokers allow for continuous ash removal. This feature helps to lower labor costs associated with boiler operation.

"Spreader stoker" refers to the method of delivering fuel to the furnace and spreading it out over the grate. Two common methods are used. Mechanical rotors can be used to throw the fuel across the furnace or combustion air can be used to blow and disperse the fuel. The solid fuel should be uniformly distributed across the bottom of the furnace onto the grate. Fines ignite and burn in suspension while the coarser particles fall to the grate and burn on a thin bed (about six inches thick) of coals and ash.

A portion of the combustion air is added from under the grate (about 60% to 70%) and the remainder is added during fuel spreading or as overfire air. This produces a staged combustion which reduces the formation of NOx. In order to achieve complete combustion, about 25% excess air is often needed.

204.5.4 Suspension Burners

Suspension burners are suitable for finely ground fuel such as sawdust, sander dust or other material that has been reduced in size by pulverization. Fuel preparation is extensive to insure appropriate fuel size. Usually fuel size is limited to 1/8-inch diameter, and fuel moisture levels must also be maintained at low levels to prevent agglomeration and to insure rapid combustion.

Biomass Burners

Two basic types of suspension burners are used for steam generation: the cyclonic burner and the solid fuel burner. Each mixes the fuel and air in correct proportion in order to ensure complete combustion in the furnace. Cyclonic burners have swirling air movement to increase residence time. A properly functioning cyclonic burner produces low particulate emissions and can be retrofitted for use on boilers designed for oil or gas. Solid fuel burners are a special class of suspension burner. These burners require extremely fine, dry fuel such as sander dust. They can often be located adjacent to existing gas/oil burners to allow dual fuel capabilities.

204.5.5 Fluidized Beds

Fluidized bed combustion is capable of burning almost any fuel and was discussed in Section 204.4.1 and illustrated in Figure 204.6. Combustion takes place in a hot, granular, inert sand-like media that boils like a liquid in an upward flow of air. In the expanded or fluidized condition, the bed depth is about double its depth when at rest. Fluidized beds have been demonstrated to operate well on a wide range of feedstocks including high ash biomass fuels and nonuniform, highly variable material that would foul most firing systems. Some fluidized beds feature an in-situ classifier for continuous removal of debris and rocks. In addition, they feature stable, low average bed temperatures (1500 °F - 1700 °F) which inhibits thermal NOx formation.

204.5.6 Agricultural Offsets

California assembly bills AB 1223 (1983) and AB 2158 (1987) established procedures for determining agricultural/forestry waste emission offset credits (Agricultural Offsets). Agricultural offsets are emission reductions that can be used as credit to offset a project's emission increases. These credits are based on

the emission benefits that occur when biomass that would have normally been disposed of by open burning is used as fuel in an incinerator equipped with emission controls.

Agricultural offset credits were established in 1983 by AB 1223 and modified by AB 2158 in 1987. This legislation requires districts to include the incremental emission benefits of reducing open field burning when considering the offset requirements for projects which use agricultural or forest waste materials as fuel to generate steam or electricity.

205 PRODUCTS OF COMBUSTION

Nitrogen in air is relatively inert (does not burn). However, at temperatures above 2000 °F, some nitrogen may combine with oxygen to form nitrogen oxides (NOx). NOx is a serious air pollutant which can contribute to ozone formation and acid rain. Sulfur in a burning fuel forms sulfur dioxide, a malodorous gas which also causes acid rain. Inert solids in a fuel may form flyash or particulates.

All of the gases and particulates formed in the furnace are known as **products of combustion**. These hot products of combustion, along with the nitrogen and excess oxygen, make up the flue gas or exhaust gas. The hot gases give up most of their heat in the furnace to the boiler tube walls by means of radiation. The hot flue gases then enter the convection section followed by the economizer, the air preheater, any pollution control equipment, the induced draft fan and finally exit out of the stack to the atmosphere.

Exhaust Gases

206 FROM THE FURNACE TO THE STACK

After the fuel is burned, the hot flue gas stream contains the products of combustion, some unwanted pollutants, some leftover oxygen, and nitrogen which enters with the combustion air and passes through unchanged. The **products of combustion** are typically carbon dioxide (CO_2) and water vapor (H_2O). Gaseous fuels such as natural gas (CH_4) will have a relatively high percentage of water vapor. High carbon fuels such as petroleum coke or coal will produce more CO_2.

The **pollutants** of concern include nitrogen oxides (NOx), sulfur oxides (SOx) and sulfuric acid (H_2SO_4), carbon monoxide (CO), particulate matter (smoke and flyash), and perhaps some unburned hydrocarbons and/or toxic compounds.

In order to assure complete combustion of the fuel, excess oxygen must be added to the furnace. The oxygen which does not react with the fuel then passes unchanged into the flue gases. A large amount of nitrogen also enters as part of the combustion air and most of this passes straight through the furnace, heated but otherwise unchanged.

From the furnace, the flue gases enter the **convection section** of the boiler. The purpose of the convection section is to recover more heat from the hot flue gases. The hot gases flow over the convection tubes transferring heat to the tubes. In many boilers, the convection section is used to superheat steam and/or to preheat boiler feedwater. The convection section may also be equipped with soot blowers to remove ash and maintain efficient heat transfer. There may be several convection sections serving different functions, such as the primary superheater, the secondary superheater, and the economizer. The economizer is simply the last set of convection tubes which recover the last of the recoverable heat from the flue gas at a relatively low temperature, perhaps 600 °F to as low as 400 °F. The economizer is typically used to preheat boiler feedwater.

Exhaust Gases

A **fluidized bed** combustor system may have solids removal structures such as baffles or U-beams, to prevent entrained solids from fouling convection tubes. In these structures, the gases encounter various changes of direction, which cause the entrained solids to impinge on the baffles and lose velocity. The solids then fall into a particle storage hopper, either for re-addition to the fluidized bed or for disposal.

206.1 AIR PREHEATER

On larger boilers, hot exhaust gases may flow through one side of the air preheater before they flow up the stack. The air preheater allows the heat in these hot exhaust gases to be transferred to the inlet combustion air resulting in a significant fuel savings at the furnace. Air preheat is often necessary to assure complete combustion when burning solid fuels such as coal or biomass materials. The preheater is usually the last heat exchange unit in the flue gas path.

As the exhaust gases give up their heat in the air preheater, the gases are cooled. If the gases cool too much, vapors such as sulfuric acid and nitric acid may begin to condense in the preheater and cause corrosion damage. Consequently, the exhaust gases are usually kept above about 400 °F to prevent condensation and corrosion.

Air preheat is often necessary to efficiently burn many solid fuels, especially moist biomass materials. The heated air removes some of the moisture and begins heating the fuel up to combustion temperature. Even with pulverized coal, it is usually necessary to preheat the combustion air to assure complete combustion in the furnace.

206.2 FLUE GAS TREATMENT DEVICES

Exhaust Gases

Most flue gas treatment devices are located between the air preheater and the stack. This applies to particulate removal facilities, such as electrostatic precipitators and baghouses. A scrubber to remove sulfur compounds and particulates could be located upstream of the stack or in the base of the stack.

A selective catalytic reduction (SCR) unit for removal of NOx would likely be located upstream of the air preheater. Operation of the SCR unit is highly dependent on the temperature of the flue gas. The optimum operating temperature is often between 500 and 800 °F. If the SCR were located down stream of the air preheater, the temperature would be too low and the desired reaction converting NOx to N_2 would not occur. If the SCR were located upstream of the convection section, the temperature would be too high and the reaction equilibrium would favor NOx.

A selective noncatalytic reduction (SNCR) unit would likely be located upstream or between segments of the convection section. Operation of the SNCR unit is also highly dependent on the temperature of the flue gas. The optimum operating temperature is often between 1400 and 1900 °F. If the SNCR were located downstream of the convection section, the temperature would be too low.

206.3 THE STACK

The primary purpose of the stack is to get the pollutants and hot gases away from the ground and from people. When released high in the air, the pollutants have a chance to disperse and be diluted. Another purpose for the stack is to

promote a natural draft which draws air into the heater and pushes the hot gases out of the stack automatically. This is less important for today's modern boilers, which often use fans to push air through the system.

As gases are heated they expand, and if the pressure stays constant, the density of these gases decreases and the gases rise and are replaced by cooler, denser gases. In a heater and stack, the hot gases rise up the stack and cause a slight vacuum near the base of the heater. It is this small vacuum in the furnace which sucks air in through the secondary burner ports and through any other openings such as air leaks in the skin or joints of the furnace. This tendency for hot flue gases to flow upward through the stack and draw air into the firebox is known as **natural draft**.

The addition of pollution reduction equipment and/or energy saving equipment usually will interrupt natural draft. In these cases, fans can be installed to push the incoming air, the outgoing stack-gases or both. The use of a fan on the inlet air supply is known as **forced draft** and the use of a fan on the outlet flue gases is known as **induced draft**.

Exhaust Stack

The addition of catalytic NOx reduction into the flue gas path will usually add enough flow restriction that a fan is required, especially if the catalyst is located near the ground. Similarly, the addition of a combustion-air preheater, which transfers heat from the effluent gases to the incoming air, may require a fan.

The flow of flue gases up the stack and the pressure inside the furnace are controlled using a **damper** which is located inside the stack or in the duct before the stack. The damper is often a plate or disk which can be rotated to partially block the flow of flue gases. It is very similar to a damper in a home fireplace. Louvers (overlapping slats) can also be used to damp the flue gases.

Also located on or near the stack are stack gas monitors and/or continuous emission monitors. At a minimum, most boilers are equipped with an oxygen monitor to measure the percent oxygen in the flue gas. A high oxygen level indicates inefficient boiler operation. Many boilers are also equipped with carbon monoxide analyzers which are used to determine if the fuel is being completely combusted. Larger or modern boilers may also have continuous emission monitors (CEMs) to determine levels of NOx, SOx, opacity (particulates), or other pollutants.

207 FUEL CHARACTERISTICS

Gas and oil are by far the predominant fuels used to generate steam in California. As a result, about 95% of the emissions from boilers come from the combustion of these fuels. About 80% of boiler emissions are from gas, mostly natural gas, and 15% are from oil, mainly diesel and heavy fuel oils.

The type of fuel to be burned is the first consideration which determines the design of the steam generation system. Equipment requirements for fuel handling and preparation, fuel combustion, heat recovery, fouling of heat transfer surfaces, corrosion, and environmental controls all vary with fuel type.

For example, a gas fired boiler requires little in the way of fuel storage and fuel handling equipment and requires a relatively small firebox. The products of combustion are not very corrosive and little or no ash is produced. Since ash is not a concern, heat transfer tubes can be arranged closely together, allowing a more compact unit. NOx formation is the pollutant of major concern and is relatively easy to control (compared to other pollutants).

Fuels

Much larger and more complex systems are necessary when a solid fuel such as coal is burned. The fuel must normally be stored, transported, and pulverized. A larger furnace is necessary and the air supply must normally be preheated to assure complete combustion. Large amounts of ash are normally produced and must be removed and disposed of. The tubes must be spaced apart to allow soot blowers to frequently clean ash from the tubes. Acid gases in the products of combustion can cause corrosion problems and solid particles can erode surfaces. Air pollutants might include high levels of NOx, SOx, and particulates, which require significant pollution control devices. Although coal is generally a cheaper fuel, the facilities to properly burn it can be very complex and expensive.

207.1 GASEOUS FUELS

Natural gas is the most common fuel burned in California boilers. Other gaseous fuels include liquefied petroleum gas (LPG), process gas (usually from the petroleum industry), and various types of waste gases. These fuels are normally introduced to the boiler firebox through a burner which mixes air with the gas for efficient combustion. The combustion products include nitrogen oxides (NOx), and possibly sulfur oxides (SOx), carbon monoxide (CO), and smoke. Natural gas and LPG are clean fuels and NOx emissions are the main concern when they

are burned. Process gases can contain high levels of hydrogen sulfide (H_2S) and when burned they may produce SOx as well as NOx. Waste gases may contain most anything, so their combustion must be closely monitored and controlled. Any of these fuels may also produce CO and smoke if insufficient air is available during combustion.

For the purposes of developing regulations and emission factors, gas-fired combustors are often organized into four general categories:-

- utility/large industrial boilers
- small industrial boilers
- commercial boilers
- residential furnaces.

Fuel Gases

Boilers and furnaces within these categories share the same general design and operating characteristics and hence have similar emission characteristics when combusting natural gas. The heat input, measured in millions of Btu per hour, is the primary factor used to determine the size of an individual combustor and its category.

207.1.1 Gaseous Fuel Characterization

A fuel gas can usually be adequately described using three properties; the **gas analysis**, the **heating value**, and the **specific gravity**. A gas analysis is simply a list of all components of a gas mixture along with the volume percent for each component. For natural gas, methane and ethane will dominate the analysis. For LPG, propane and butane will dominate.

The heating value represents the amount of energy (Btu) released when one cubic foot (or other unit) of gas is burned. A Btu (British thermal unit) is defined as the energy needed to heat one pound of water from 60 ^{o}F to 61 ^{o}F. Commonly, the **higher heating value** (also called gross heating value) is used, which includes all of the heat released as the combustion products cool to 60 ^{o}F and as any water vapor condenses to water. The **lower heating value** is sometimes used and is similar, except that water vapor in the combustion products remains as vapor.

The specific gravity indicates the weight of the fuel gas mixture compared to air. For example, a gas which is half as heavy as air (at standard temperature, 60 ^{o}F, and standard pressure, 14.7 psig) would have a specific gravity of 0.5. The

specific gravity is especially important in that it indicates the average molecular weight of a gas mixture. Air has an average molecular weight of 28.8. Methane has a molecular weight of 16. The specific gravity of methane is then:

Sp. Grav. = 16/28.8 = .56.

The gas analysis, specific gravity, and heating value are all interrelated and can be used to cross-check values. In general, hydrocarbon mixtures with a higher specific gravity will also have a higher heating value and will have a higher percentage of heavier components such as propane or butane.

207.1.2 Natural Gas

Natural gas is one of the primary fuels used throughout the country and it is particularly common in California because it is a relatively clean burning fuel. It is used mainly for industrial process steam and heat production, for residential and commercial space heating, and for electric power generation. It is distributed throughout much of California by an extensive pipeline system.

Natural gas consists of a high percentage of methane (generally above 80 percent) and varying amounts of ethane, propane, butane, and inert gases (typically nitrogen, carbon dioxide, and helium). The gases are found underground in crude oil reservoirs, usually in a pocket above the oil, and may also be found in dry gas reservoirs. Gas processing plants are required for the recovery of liquefiable components and for the removal of hydrogen sulfide before the gas is used as boiler fuel. The average gross heating value of natural gas is approximately 8900 kilocalories per standard cubic meter (1000 British thermal units per standard cubic foot), usually varying from 8000 to 9800 kcal/scm (900 to 1100 Btu/scf). The specific gravity of natural gas usually ranges from 0.60 to 0.64.

Fuel Gases

In California, the quality of natural gas in the pipeline system is regulated by the Public Utilities Commission (PUC). Specifically, PUC General Order 58-A limits the levels of hydrogen sulfide (H_2S) and total sulfur in pipeline quality natural gas and requires that the heating value be measured periodically and made available to the consumer. H_2S is limited to 0.25 grain per 100 standard cubic feet (SCF) of gas and total sulfur is limited to 5 grains per 100 SCF of gas (about 85 ppmv).

Even though natural gas is considered to be a relatively clean-burning fuel, some emissions can result from combustion. For example, improper operating conditions, including poor air/fuel mixing, insufficient air, etc., may cause large amounts of smoke, carbon monoxide (CO), and organic compound emissions.

Natural Gas

A smelly sulfur-containing mercaptan is added to natural gas to permit leak detection, so small amounts of sulfur oxides will be produced in the combustion process. However, the SOx emissions are generally small enough when burning commercial natural gas that they are not in violation of district rules or regulations. Violations might occur in cases of odors or of burning unauthorized fuels.

Nitrogen oxides (NOx) are the major pollutants of concern when burning natural gas. Nitrogen oxide emissions depend primarily on the peak temperature within the combustion chamber as well as the furnace-zone oxygen concentration, nitrogen concentration, and time of exposure at peak temperatures. Emission levels vary considerably with the type and size of combustor and with operating conditions (particularly combustion air temperature, load, and excess air level in boilers). Most modern facilities can now control NOx to acceptable levels by modifying the combustion, often by using low-NOx burners.

207.1.3 Liquefied Petroleum Gas (LPG)

Liquefied petroleum gas (LPG) consists of propane, butane, or a mixture of the two, with trace amounts of propylene and butylene. LPG (bottled gas) is usually sold as a pressurized liquid in metal cylinders. LPG is recovered from underground reservoirs along with natural gas and crude oil. It is a by-product from natural gas treatment and from gasoline refining.

Liquefied petroleum gas is graded according to maximum vapor pressure, with Grade A being mostly butane, Grade F mostly propane, and Grades B through E being varying mixtures of butane and propane. The heating value of LPG ranges from 6,480 kcal/liter (102,000 Btu/gallon) for Grade A to 6,030 kcal/liter (91,000 Btu/gallon) for Grade F. The largest market for LPG is the domestic/commercial market, followed by the chemical industry and internal combustion engines.

LPG

Industry standards for LPG are generally determined by the Gas Processors Association (GPA) and are found in the Engineering Data Book published by the Gas Processors Suppliers Association (GPSA). GPA Standard 2140 includes specifications for vapor pressure, volatile residue, non-volatile residue, copper strip corrosion, total sulfur, and water content. These specifications assure that the fuel can be safely handled in transport systems, and will perform adequately and safely for the end user. The sulfur content limit for LPG is set to reduce corrosion in the distribution facilities. GPA specifications permit a maximum of 10 grains/100 scf (123 ppmw) in Propane HD-5; 15 grains/100 scf (185 ppmw) in commercial propane; and 15 grains/100 scf (140 ppmw) in butanes.

LPG is considered a "clean" fuel because it generally does not produce visible emissions. However, gaseous pollutants such as carbon monoxide (CO), organic compounds, and nitrogen oxides (NOx) do occur. The most significant factors affecting these emissions are burner design, burner adjustment, and flue gas venting. Improper design, insufficient combustion air, and blocking and clogging of the flue vent, result in incomplete combustion and the emissions of aldehydes, CO, hydrocarbons, and other organics.

Nitrogen oxide emissions are dependent on a number of variables, including flame temperature, excess air, and fuel/air mixing. LPG does burn relatively hot and NOx emissions can be a problem if not properly controlled.

Normally, LPG has very low sulfur levels. The amount of sulfur dioxide (SO_2) emitted is directly proportional to the amount of sulfur in the fuel.

Propane and butane are now being used in Southern California as backup fuel to natural gas, replacing fuel oils as they are phased out. Emission controls for NOx have been developed for fire tube and water tube boilers firing propane or butane. Vendors are now warranting retrofit systems to levels below 25 ppm. See Figure 207.1 for a comparison of LPG and natural gas characteristics.

207.1.4 Process Gas

Various industrial processes, especially petroleum production and petroleum refining, produce hydrocarbon gas streams which are then burned as fuel. Although the characteristics of a process gas vary with the source, many resemble a mixture of natural gas and LPG, with a few impurities thrown in. Most commonly, the impurity of interest is H_2S or mercaptan. These compounds result in

Fuel Gases

Table 207.1
Example Gaseous Fuel Characterization

	Natural Gas	LPG Grade A	LPG Grade F
Methane	88%	0%	0%
Ethane	7%	2%	1%
Propane	1%	95%	4%
Butane	1%	3%	95%
Hydrogen	1%	0%	0%
Carbon Dioxide	1%	0%	0%
Nitrogen	1%	0%	0%
Total sulfur (maximum)	169 ppmw	140 ppmw	185 ppmw
Higher Heating Value	1,050 Btu/cu.ft.	100,000 Btu/gal	91,000 Btu/gal

SOx emissions when the fuel is burned and so their concentrations in the fuel must be controlled. In almost all cases, the allowable characteristics of the process gas fuel are specified in the Permit to Operate for the boiler.

207.1.5 Waste Gas

Boilers are sometimes also used for the incineration of low-heating-value waste gas. This can save energy and be an efficient method of disposal of the gas. This secondary use of a furnace as an emission control device should not be discouraged, but the inspector must assure that the use of waste gas is allowed in the Permit to Operate and is properly performed.

The Permit to Operate should contain the required conditions for the waste gas burning operation. In some cases special burners are required to properly burn low-heating-value gases. Contaminants such as sulfur should not be excessive in the waste gas. Any toxic compounds which are likely to be in the waste gas should be evaluated in a source test (collection of emissions samples). During the source test, the waste gas should be introduced to the boiler at normal or maximum expected rates.

207.2 FUEL OILS

Fuel oils are classified into two types, **distillate** and **residual**. **Distillate oils** (fuel oil grade numbers 1 and 2) are used mainly in domestic and small commercial applications in which clean and easy fuel burning is required. **Fuel oil No. 1** is also known as **kerosene**, heating oil No. 1, or diesel No. 1. **Fuel oil No. 2** is also known as common **diesel**, diesel No. 2, or heating oil No. 2. The most common type of oil in the family of distillate oils is common diesel. The term "diesel" is better known than the term distillate oil and is often used in industry and in this manual.

In steam generation, diesel oils are most often used only as a backup fuel or as a start-up fuel due to the relatively high costs. A common backup situation is to have a tank of diesel on standby in case of a natural gas curtailment or other fuel supply interruption. These boilers are generally fired with oil about once per year to test the oil firing system. Natural gas is currently the preferred fuel due to the lower fuel cost and lower air pollution emissions. Diesel might also be used in a small start-up boiler to warm up a larger utility boiler prior to its being lit off with fuel oil No. 6 (discussed below). Distillates are more volatile and less viscous than residual oils, having negligible ash and nitrogen contents and usually containing less than 0.3 weight percent sulfur.

Fuel Oils

Residual oils (grade Numbers 4, 5, and 6) on the other hand, are used mainly in utility, industrial and large commercial applications with sophisticated combustion equipment. Fuel oil No. 4 is sometimes classified as a distillate, and No. 6 is sometimes referred to as Bunker C. Being more viscous and less volatile than distillate oils, the heavier residual oils (Nos. 5 and 6) must be heated to facilitate handling and proper atomization. Because residual oils are produced from the residue after lighter fractions (gasoline, kerosene and distillate oils) have been removed from the crude oil, they contain significant quantities of ash, nitrogen and sulfur.

207.2.1 Particulate Matter

Particulate emissions depend heavily on the grade of fuel fired. Particulate formation is generally low when burning the lighter distillate oils. And particulate formation is much higher when burning the heavier residual oils. Among residual oils, fuel oils No. 4 and No. 5 usually produce less particulate than does the heavier No. 6 oil. These particulate emissions are often visible as a dark plume coming from the stack.

Fuel Oils

In boilers firing fuel oil No. 6, particulate formation is related to the sulfur content of the oil. Particulate emissions can be reduced considerably when low sulfur No. 6 oil is fired. This is because low sulfur No. 6, either refined from naturally low sulfur crude oil or desulfurized at a refinery, has a lower viscosity and less asphaltenes, ash and sulfur. These characteristics result in better atomization and cleaner combustion.

Boiler load can also affect particulate emissions in units firing fuel oil No. 6. At low load conditions, particulate emissions may be lowered by a third from utility boilers and by over half from small industrial and commercial units. However, no significant particulate reductions have been noted at low loads from boilers firing any of the lighter grades. At too low a load, proper combustion conditions cannot be maintained, and particulate emissions may increase drastically. Almost any condition that prevents proper boiler operation can result in excessive particulate formation.

207.2.2 Sulfur Oxides

Total SOx emissions are almost entirely dependent on the sulfur content of the fuel and are not affected by boiler size, burner design, or grade of fuel being fired. In most of California, fuel oil No. 6 must be of the low sulfur type before it can be burned. Low sulfur is defined as less than 0.5% sulfur by weight. The allowable sulfur content is a common restriction in most Permits to Operate.

On the average, more than 95 percent of the fuel sulfur is emitted as SO_2, about 1 to 4 percent as SO_3 and about 1 to 3 percent as sulfate particulate. SO_3 readily reacts with water vapor (in both air and flue gases) to form a sulfuric acid mist. In some cases, this sulfuric acid mist is visible as a white plume coming from the stack.

207.2.3 Nitrogen Oxides

Two mechanisms form NOx: oxidation of **fuel-bound nitrogen** and **thermal fixation** of the nitrogen in combustion air. Fuel NOx is primarily a function of the nitrogen content of the fuel and the available oxygen. On average, almost half the fuel nitrogen is converted to NOx, but this may vary from 25 to 70 percent. Thermal NOx is a function of peak flame temperature and available oxygen. Peak flame temperature and available oxygen depend on boiler size, firing configuration and operating practices.

Fuel-bound nitrogen conversion is the primary NOx forming mechanism in residual oil boilers, usually accounting for over half of the total NOx generated. Exceptions include units burning a low nitrogen residual oil or units with unusually high peak flame temperatures. (High peak flame temperatures produce excessive NOx by thermal fixation). Fuel nitrogen is the largest cause of NOx formation, therefore, low-NOx burners and flue gas recirculation (FGR) have a limited ability to reduce NOx when burning residual oils. Selective catalytic reduction (SCR) or other flue gas treatment may be necessary to meet low NOx limits.

Thermal fixation is the primary NOx forming mechanism in boilers firing distillate oils or gaseous fuels. This is because of the negligible nitrogen content in these lighter fuels. Low-NOx burners and FGR, as well as SCR, could be effective methods of reducing NOx from boilers fired with distillate oils.

Fuel Oils

A number of variables influence how much NOx is formed by thermal fixation and fuel bound nitrogen. The firing practices have an important effect on NOx formation. Limited excess air firing, flue gas recirculation, staged combustion, or some combination may result in NOx reductions of up to 60 percent. Load reduction can likewise decrease NOx production. And burner configuration can cause areas of extremely high temperatures within the furnace where thermal fixation of NOx occurs. See section 300 for a discussion of these techniques.

It should be noted that most of these variables, with the exception of excess air, influence the NOx emissions only of large oil fired boilers. Limited excess air firing is possible in many small boilers, but the resulting NOx reductions are not nearly so significant.

207.2.4 Other Pollutants

In a well tuned boiler, small amounts of volatile organic compounds (VOC) and carbon monoxide will be emitted from the combustion of fuel oil. The rate at which VOCs are emitted depends on combustion efficiency. If a boiler unit is operated improperly or is poorly maintained, the concentrations of carbon monoxide and VOCs may increase by several orders of magnitude.

Fuel Oils

Organic compounds present in the flue gas streams of boilers include aliphatic and aromatic hydrocarbons, esters, ethers, alcohols, carbonyls, carboxylic acids and polycyclic organic matter. Polycyclic organic matter includes organic compounds having two or more benzene rings.

Trace elements are also emitted from the combustion of fuel oil. Emissions of trace elements from oil fired boilers depend primarily on the trace element concentrations of the oil. The quantity of trace elements will also vary with combustion temperature, fuel, feed mechanism, and the composition of the fuel. The temperature determines the degree of volatilization of specific compounds contained in the fuel. The fuel feed mechanism affects the separation of emissions into bottom ash and fly ash.

207.3 USED OILS

Used oil, or waste oil, was once burned as fuel in a variety of ways. These included industrial boilers, commercial/institutional boilers, space heaters, and many other industrial uses. Large amounts of used oil were burned in boilers and space heaters. Space heaters are small combustion units that were once common in automobile repair shops where supplies of used crankcase oil are available.

Used oil often contains toxic metals, hazardous organic compounds and chlorinated solvents. Benzene, toluene, polychlorinated biphenyls (PCBs) and polychlorinated dibenzo-d-dioxins are a few of the hazardous compounds that have been detected in used oil samples. Additionally, these hazardous compounds may be formed in the combustion process as products of incomplete combustion. When used oils are burned, the potential pollutants include toxic metals, dioxins, polyaromatic hydrocarbons (PAHs), particulate matter (PM), small particles below 10 micrometers in size (PM-10), organic compounds, carbon monoxide (CO), sulfur oxides (SOx), nitrogen oxides (NOx), and hydrogen chloride (HCl).

Consequently, the state of California has prohibited burning used oils as fuel, mixing used oils with fuel or other wastes, or incineration of used oils. Used oils are to be handled as a hazardous waste until they are recycled. This law is found in the Health and Safety Code sections 25250 through 25250.25, in particular, section 25250.5.

Per HSC 25250.1, *"used oil" means any of the following:*

Prohibited Fuel

(1) Any oil that has been refined from crude oil, and has been used, and, as a result of use, has been contaminated with chemical or physical impurities.
(2) Any oil that has been refined from crude oil and, as a consequence of extended storage, spillage, or contamination with nonhazardous impurities such as dirt and water, is no longer useful to the original purchaser.
(3) Spent lubricating fluids which have been removed from an engine crankcase, transmission, gearbox, or differential of an automobile, bus, truck, vessel, plane, heavy equipment, or machinery powered by an internal combustion engine.
(4) Spent industrial oils, including compressor, turbine, and bearing oil, hydraulic oil, metalworking oil, refrigeration oil, and railroad drainings.
(5) Contaminated fuel oil with a flash point greater than 100°F.

And per HSC 25250.5(a)

Disposal of used oil by discharge to sewers, drainage systems, surface or groundwaters, watercourses, or marine waters; by ***incineration or burning as fuel****; or by deposit on land, is prohibited, unless authorized under other provisions of law.*

Boilers designed to burn either distillate or residual fuel oils can potentially be used to burn waste oil. The inspector should be alert to notice facilities which would allow mixing waste oils into fuel.

Please note that HSC 25250.3 includes some specific exemptions for the petroleum refining industry and for manufacturers of oil products.

Coal

207.4 SUBBITUMINOUS COAL

Several California facilities have medium sized cogeneration units which burn subbituminous coal, usually brought in by train from the rocky mountain states. Ranked as a medium quality coal, subbituminous usually has a low sulfur content (less than 1%) but a significant amount of ash.

lower quality -	peat
	lignite coal
	subbituminous coal
	bituminous coal
higher quality -	anthracite coal

Subbituminous coal is black as opposed to the browner, plant textured lignite coals. They contain considerable moisture (15 to 30%) and are known to combust spontaneously while drying.

207.5 PETROLEUM COKE

Petroleum coke is a black coal-like residue generated in an oil refinery. It is a by-product from the coking (thermal cracking) of heavy residual oils. The heavy oils are heated until they decompose into lighter oil vapors and a solid carbon residue. The solid carbon residue, petroleum coke, consists mainly of carbon (90 to 95 per cent), has a low ash content, but can have a high sulfur content. It is used as a feedstock in coke ovens for the steel industry, for heating purposes, for electrode manufacture and for the production of chemicals.

The two most important types are "green coke" and "calcinated coke". Green coke is simply untreated material, often high in sulfur, direct from the coker. Coke is calcined to convert green coke to the more valuable "needle coke" and to reduce the sulfur content.

207.6 BIOMASS FUEL

Wood and biomass fuels are composed mainly of cellulose and moisture. Most biomass has high moisture content when first available, ranging from 40% moisture in forest wastes to as much as 80% moisture in rice straw. Some of these fuels are dried before they are burned. Stable combustion can be maintained in most boilers with fuel moisture as high as 65% by weight. Moisture also lowers the effective energy output when the fuel is burned. This lowers the flame temperature and causes difficulties in efficiently burning the biomass fuels. For every pound of moisture in the fuel, over 1000 Btu of energy is required to evaporate the water. As the percent moisture increases, usable heat decreases. If biomass materials are moist when stored, bacteria can proliferate, degrade the residue, and reduce its fuel value.

Cellulose contains the chemical energy for combustion and also contains a significant amount of fuel-bound oxygen. This oxygen decreases the amount of air required for combustion and therefore reduces the amount of nitrogen in the flue gas.

Most natural biomass fuels contain relatively little ash. One notable exception is rice straw. Silicates found in some biomass residues such as rice straw melt when temperatures approach 1800 ^{o}F. This melting and fusing (slagging) of ash material can block air ports, decrease boiler efficiency, and corrode the internal surfaces of the combustor. This has become particularly frustrating in the Sacramento Valley where alternatives to open field burning of rice stubble are being actively pursued.

Because most crop residue is not very dense, a relatively large volume is required as compared to conventional fuels.

Biomass

As we noted, wood and biomass fuels consist mostly of cellulose and moisture. This makes the air emissions from biomass fueled boilers rather easy to predict. We would normally be concerned with particulates, carbon monoxide, and nitrogen oxides. Unfortunately, this equipment can be (and has been) used to incinerate many other materials such as wastes and trash. These other materials are capable of producing a myriad of pollutants if they are not burned with the proper equipment. A relatively common type of violation for a biomass fueled

boiler is burning a fuel that is not approved in the Permit to Operate. This can be a main concern when inspecting a biomass unit. See Table 207.2 for properties of biomass materials.

Table 207.2
Properties of Biomass Materials

Material	Higher Heating Value Btu/lb	Nitrogen %	Sulfur %	Ash %
Field Crops	6,000 to 8,300	0.5 to 4.5	0.01 to 0.7	5 to 17
Orchard Prunings	7,800 to 8,700	0.3 to 0.8	0.04 to 0.08	1.1 to 3.2
Forest Residues	8,000 to 10,000	0.1 to 0.4	0.01 to 0.1	0.2 to 5.3

207.7 WOOD WASTE

Biomass

Wood waste generally consists of bark, sawdust, sawmill shavings and reject lumber from the forest products industry. The boiler is often located onsite where the waste products are generated. The waste/fuel may be trucked to an offsite boiler and stored in an outdoor pile, in bins, or in silos. Proper handling and storage is required to avoid extremely dusty conditions.

The fuel is normally screened to remove oversized material. The oversized pieces are then fed to a shredding machine (a hogger) before being sent to the combustor. Pieces of iron are normally removed by a magnetic separator.

In some cases, the fuel must be dried before combustion. If pre-drying is required, it can be accomplished using a mechanical hydraulic press, using a hot gas drier, or both.

208 SPECIALIZED BOILER TYPES

208.1 ENHANCED OIL RECOVERY BOILERS

The enhanced oil recovery boiler was designed specifically for use in heavy oil production fields such as those found in southern California. The boiler produces high pressure wet steam which is piped to steam injection wells and then down into the porous rock layers containing heavy oil. This heats the oil, lowering the viscosity and allowing it to flow toward the nearby oil recovery wells.

Oil Fields

This type of boiler has a unique design for the application. The feedwater makes only one pass through the boiler and about 80% is converted to steam. The entire wet mix is then injected into the wells. The firebox is designed for relatively small heat releases which prevent the tubes from getting too hot and forming water deposits on the inside. This allows the use of lower quality feedwater such as water recovered from the oil/water separator. Since the steam requirements for a given number of wells is nearly constant, the boiler can operate with a constant production rate and the control system is simplified.

The enhanced oil recovery boiler is often fired on field gas, which is recovered with the oil production. It may also be fired with commercial natural gas or crude oil. Consequently, the sulfur content of the fuel is a main concern for limiting SOx emissions. A flue gas scrubber system or a fuel treatment system may be required. In the past, it was common to fuel the boilers with crude oil or raw gas and then route the flue gases through a caustic scrubber to remove SOx and particulates. This is being phased out and treated fuel gas or commercial natural gas is being burned, making the scrubber systems unnecessary. NOx emissions from the boilers must also be controlled, generally by adjusting the combustion of the fuel.

208.2 COGENERATION

Many industrial facilities require steam for process heating and also need electrical power. In some facilities, this power and steam can best be supplied with one steam generation system. This dual purpose steam system is called cogeneration and is usually very efficient with respect to recovering heat from the fuel. Cogeneration is so efficient that the federal government and the state of California have adopted regulations and provided incentives in an effort to promote these facilities.

When generating electricity only, much of the heat supplied (up to 60%) is lost when the turbine exhaust steam is condensed. The cooling water system absorbs heat from the exhaust steam as it condenses and then the cooling water rejects the waste heat to the atmosphere. In a cogeneration system, the exhaust steam is not condensed but is used to provide heat to an industrial process. The result is a significant increase in overall efficiency.

Cogeneration

One difficulty in operating a cogeneration system is balancing the electrical power and steam needs of the facility. The federal government has tried to alleviate this restriction by encouraging the electric utility industry to buy excess electrical power, often at attractive rates. Government has also provided tax credits to encourage building some cogeneration units. The result has been a proliferation of cogeneration installations. There are currently about 450 cogeneration systems in California, not including those owned by the electric utilities.

208.2.1 California Cogeneration History

In the late 1970s and early 1980s, five factors made cogeneration very attractive.

(1) The Federal Public Utility Regulatory Policies Act of 1978 (PURPA) required that public utilities purchase electricity generated by cogenerators and small power producers.
(2) The California Public Utilities Commission (CPUC) required that public utilities offer a set of Long-Term Standard Offer contracts, some of which guaranteed the selling price for capacity and electrical energy delivered to the utility.
(3) The CPUC established cogeneration natural gas tariffs lower than those for industrial boilers.
(4) The efficiency of gas turbines improved sufficiently for cogenerators to generate electricity at costs comparable to electric utilities.
(5) Legislation was passed requiring air districts to grant offset credit to new cogeneration facilities that generate electricity. The offset was limited to the estimated emissions reduction associated in the reduction in utility power plant operation.

These factors combined to spur the development of almost 5,000 megawatts (400 cogeneration plants) of natural gas fired cogeneration capacity in California by the end of 1989.

In 1984, the Public Utilities Commission suspended the Long-Term Standard Offer contracts and the regulatory environment became much less favorable. The emission offset provision also expired. The California Energy Commission (CEC) now forecasts little more cogeneration development in the state in the near future.

The CEC has siting requirements for cogeneration units capable of producing 50 megawatts or more. These siting requirements include an Environmental Impact Report (EIR) and the process can take a considerable amount of time to complete. This is one reason that there are only about a dozen nonelectric utility cogeneration units in California which have a power output capability above 50 megawatts.

208.2.2 Types of Cogeneration

There are two main types of cogeneration systems. First, in areas where natural gas or fuel gas is readily available and inexpensive, a gas turbine-based system is commonly used. The turbines are similar to those used to propel jet aircraft. The natural gas is burned in the turbine which spins and drives a generator to produce electricity. The hot exhaust gases from the turbine are then routed to a heat recovery steam generator (HSRG) which supplies steam to an industrial process. This is by far the most common configuration used in the state.

Cogeneration

Second, if the most economical fuel is a solid type such as wood waste, agricultural waste, coal, or petroleum coke, a steam turbine topping cycle is often used. The fuel is burned in a typical boiler furnace to produce high pressure steam. This steam is run through a turbine to generate electricity. The exhaust steam is then used in an industrial process. Only about 10 % of the cogeneration units in California use this boiler-based method.

Cogeneration

A third type of cogeneration system, based on reciprocating engines, serves a smaller share of the market. These systems are based on converted automotive and truck engines which drive electric generators and the exhaust gases are used to supply heat. They have a low capital cost, have high fuel-to-electricity conversion efficiencies, and have relatively low maintenance requirements.

The gas turbine-based cogeneration system and the reciprocating engine-based systems produce combustion emissions which are indicative of the particular combustion process. Because these are significantly different than the combustion process found in a boiler furnace, these types of cogeneration are not discussed in detail here. For more information on these topics, please refer to CARB Compliance Assistance manuals Gas Turbines and Stationary Reciprocating Engines.

208.2.3 Steam Turbine Topping Cycle Systems

Topping cycle cogeneration systems first generate steam in a boiler, use the steam to drive a steam turbine for electricity generation, and then use the waste steam for heat in an industrial process. Because these systems can use a conventional boiler for steam generation, they provide some flexibility in the type of fuel burned and can burn alternative fuels such as wood waste, agricultural waste, petroleum coke, as well as other solid, liquid, or gaseous fuels.

The boilers used on these systems are essentially the same as those boilers that we have already discussed.

300 AIR POLLUTION CONTROLS

301 AIR EMISSIONS

The pollutants of most concern to us are nitrogen oxides (NOx), sulfur oxides (SOx), and particulates (usually seen as smoke). Waste to energy plants may have additional toxic pollutants which must be controlled but these are not covered in this book. Carbon monoxide (CO) and unburned organic compounds can also be a problem when the boiler is not operated properly and combustion is not complete.

NOx is a precursor to ozone and must be controlled in areas which are not in attainment for ozone. Unfortunately, much of the state of California is not in attainment and there are increasingly strict limits on NOx emissions in most air districts. NOx also contributes to acid rain and in southern California, nitric acid is the most common acid found in rain.

SOx can be odorous, is a contributor to acid rain and fog, and can cause adverse health effects. It can also combine with oxygen to form fine particulate sulfates in the air. In California, problems with SOx emissions are not as large as the problems with other pollutants such as ozone and particulate matter. Problems with sulfur dioxide are worse on the East Coast where more coal, oil and heating oil are burned.

Pollutants

And particulates are becoming recognized as a cause of many respiratory problems as well as being a smoky nuisance.

NOx emissions can be reduced either by preventing NOx formation during fuel combustion, by later removing NOx from the flue gas, or by changing to a fuel which produces less NOx when burned. Low-NOx burners can be effectively used in systems which burn gas, oil, or pulverized coal to reduce NOx formation during combustion. Overfire air is a staged combustion technique also used to reduce NOx formation during combustion of solid and oil fuels. Low temperature combustion in fluidized beds is a method used when firing solid fuels. If the formation of NOx is not or cannot be controlled during combustion, there are two common systems for removing it from the flue gas. These are selective catalytic reduction (SCR) and selective noncatalytic reduction (SNCR). Switching to natural gas, or another fuel which produces relatively little NOx, can also be an alternative.

300 AIR POLLUTION CONTROLS

There are three common techniques for reducing **SOx** emissions from boilers. First, fuels high in sulfur content can be replaced by low-sulfur fuels. For example, many utilities which formerly burned bunker C residual fuel oil have switched to low-sulfur fuel oil, and most have later switched again to natural gas. Common low-sulfur fuels include natural gas, low-sulfur residual fuel oil, LPG, and diesel. Second, the sulfur can be removed during combustion. One example is burning coal in a bed of fluidized limestone. The third technique is to remove SOx from the flue gas. This is generally accomplished by scrubbing the flue gas with a slurry of absorbent in a spray tower.

Pollutants

Combustion of solid fuels, such as coal, petroleum coke, or biomass materials, usually requires a **particulate** control device for the flue gas. The two common particulate controls are the electrostatic precipitator (ESP) and the baghouse (multiple fabric filters).

In the effort to minimize NOx production in the burner flame, the amount of excess air is often minimized. As a result, incomplete combustion may occur and the level of **carbon monoxide (CO)** may increase to unacceptable levels. In most cases, the level of CO in the flue gas is measured and the excess air is adjusted if necessary.

Incomplete combustion can also result in emissions of organic materials such as **unburned hydrocarbons** and partially burned hydrocarbons. These partially combusted materials may contain aldehydes, alcohols, or other organic chemicals. Incomplete combustion is normally monitored by analyzing for the CO concentration in the flue gas. If the CO level is low (about 400 ppm or better), then the combustion is sufficient to burn most fuels completely.

For the purposes of developing emission factors, boilers have been organized into three general categories: utility/large industrial boilers, small industrial boilers, and commercial boilers. Boilers and furnaces within these categories share the same general design and operating characteristics and hence have similar emission characteristics when combusting the same fuel. The primary factor used to demarcate the individual combustor categories is heat input.

302 NO, NO_2, AND NO_x

In a combustion system, the first step in the oxygenation of nitrogen is the formation of nitric oxide (NO). The NO can then be oxidized again to form nitrous oxide (NO_2). In a flue gas system, with the oxygen concentration somewhere near 3%, the ratio of NO to NO_2 stays fairly constant at near 9 to 1. That is, about 90% of the NOx in flue gas is in the form of NO. NOx is a term commonly used to designate the sum of both the NO and NO_2.

Later, when the gases are emitted to atmosphere and the oxygen concentration is about 21%, nearly all of the NO converts to NO_2. In the following discussion we often mention the formation of NO during combustion. To emphasize emissions to the atmosphere, we use the term NOx.

302.1 NITROGEN OXIDE (NO_x) FORMATION

There are two main mechanisms which form NOx in the boiler furnace. First, some fuels contain chemically bound nitrogen which can react with oxygen during combustion to form **fuel NOx**. Second, there is a chemical combination of atmospheric nitrogen and oxygen which occurs at high temperatures (primarily above 2800 °F) to form **thermal NOx**. These temperatures occur in the area of the flame and possibly in the center of the furnace during times of high firing rates. There is no chemical difference between fuel NOx and thermal NOx other than the way that they were formed.

Fuel NOx

Thermal NOx

Fuel-bound nitrogen occurs in most petroleum and coal fuels but is not present in most gaseous fuels such as natural gas and LPG. During combustion, fuel nitrogen can form molecular nitrogen (N_2), hydrogen cyanide (HCN), nitric oxide (NO), or ammonia (NH_3). Most of the HCN and NH_3 are later oxidized to NO. Conversion of fuel-bound nitrogen to fuel NOx is highly dependent on the fuel/air ratio at the point of combustion, ranging from 5% conversion to NO under air starved conditions to 50% under high excess air conditions.

Coal may consist of 0.5% to 2% nitrogen, No. 6 fuel oil may contain 0.1% to 0.5% nitrogen, and No. 2 distillate fuel oil contains about 0.01% nitrogen. These values are included in Table 302.1. When burning fuel oil, nitrogen oxide emissions can be reduced by switching to either a light distillate oil or a residual

Table 302.1
Nitrogen Content of Several Fossil Fuels

Fuel	Percent Nitrogen in the Fuel
Natural Gas	negligible
LPG	negligible
No. 1 Distillate Fuel Oil, Diesel No. 1, Kerosene	about 0.01%
No. 2 Distillate Fuel Oil, Diesel No. 2, Diesel	about 0.01%
No. 6 Fuel Oil	0.1% to 0.5%
Coal	0.5% to 2%

oil with less nitrogen. The practice of fuel substitution, however, may be limited by the ability of a given operation to fire a better grade of oil and by cost and availability.

NOx Formation

At the high temperatures present at the flame tip, atmospheric nitrogen (N_2) can break apart and recombine with oxygen to form **thermal NOx**. The formation of thermal NOx is a function of the peak temperature, the fuel and air mixing, and the residence time. High temperatures (above about 2800 ^{o}F) are necessary to dissociate or break apart the nitrogen molecules, which is the first step in NOx formation. These high temperatures are usually present only at the tip of the flame and in the hottest parts of the furnace. Solid and liquid fuels often can produce the hottest temperatures and have the potential to produce more thermal NOx. Many NOx control methods concentrate on lowering the peak temperatures in the flames and furnace.

The **mixing** of the fuel and air also affects NOx formation in several ways. If the fuel and air are well mixed before combustion, the combustion reaction is instantaneous and high peak temperatures (high enough to form substantial NOx) are seen. If the fuel and air are introduced into the furnace before mixing, fuel-rich zones and fuel-lean zones will be formed as mixing occurs. Less NO forms in fuel-rich mixtures because the oxygen preferentially reacts with the carbon and hydrogen in the fuel. Also, less NO forms in fuel-lean mixtures because the excess air must be heated by the reaction and serves as a heat sink, lowering peak temperatures. Some NOx control methods take advantage of these effects by mixing the fuel with the air in stages.

NOx Formation

Finally, the longer the gases stay at NO forming temperatures (called the residence time), the greater the amount of NO formed. It has been estimated that the **residence time** at temperatures sufficient for NO formation is about 0.01 to 0.05 seconds for many conventional furnaces. The bulk of the gases in the furnace are somewhat cooler. Gases cool from the peak flame temperature rather quickly. The rate of fuel firing can affect the bulk furnace temperature and consequently, the residence time at peak temperatures. High load firing will increase the bulk furnace temperature, the peak temperature residence time, and in general, the formation of NOx.

Even though **natural gas** has no fuel-bound nitrogen and generally produces lower flame temperatures, nitrogen oxides (NOx) are still the major pollutants of concern when burning natural gas. Nitrogen oxide emissions depend primarily on the peak temperature within the combustion chamber as well as the furnace-zone oxygen concentration, nitrogen concentration, and time of exposure at peak temperatures. Emission levels vary considerably with the type and size of combustor and with operating conditions (particularly combustion air temperature, load, and excess air level in boilers).

303 PREVENTING NO_x FORMATION AT COMBUSTION

303.1 FUEL SUBSTITUTION

Fuel substitution, the firing of cleaner fuels, can substantially reduce emissions of a number of pollutants. Nitrogen oxide emissions will be reduced by switching to either a light distillate oil or a residual oil with less nitrogen. The practice of fuel substitution, however, may be limited by cost and availability.

An example of fuel substitution is to replace fuel oil with natural gas. This may require burner replacement and other boiler modifications. But the emission reductions are substantial. Emissions of particulates and SOx would be reduced to near negligible amounts during normal operation. NOx emissions would also be reduced and it is somewhat easier to further reduce NOx to the challenging California requirements when the fuel is natural gas.

303.2 LOW EXCESS AIR

In order to achieve complete combustion, boilers are fired with excess combustion air. Most boilers are operated at about 2 to 6 percent oxygen in the stack gas. Some smaller boilers may run at 10 % oxygen in the stack gas but this is an inefficient operation which wastes fuel.

NOx Suppression

At the normal boiler operation levels of 2% to 6% oxygen at the stack, it has been found that the formation of NOx is proportional to the excess oxygen. Higher levels of oxygen mean that more oxygen is available for NOx formation. It has been shown that decreasing the stack gas oxygen from 5% to 3% will usually reduce NOx formation by 10% to 15%. Several California districts have now promulgated rules which require larger facilities to operate at the 3% oxygen level or below.

In order to effectively operate at low excess air levels, the fuel and combustion air must be carefully controlled and properly distributed to the burners. Poor **air distribution**, for example, might cause incomplete combustion at one of the burners. High excess air operation might cover up this type of problem by providing plenty of oxygen to complete the combustion. At low excess air levels though, CO and hydrocarbons might be found at the stack. Conversion to low excess air operation might require more sophisticated methods of measuring and regulating fuel and air flow to the burners, and might require changes to the air delivery system to ensure proper air distribution.

Low excess air operation is usually accomplished using **flue gas analyzers** for oxygen and carbon monoxide (CO). These monitors provide feedback to the combustion air flow control damper. A high oxygen signal would cause the air supply damper to close and reduce the air supply. A high CO signal would cause the air supply damper to open and increase the air supply to encourage complete combustion. If both the oxygen and CO levels are high, there is a problem with the combustion system, probably due to poor air/fuel mixing.

303.3 FLUE GAS RECIRCULATION (FGR)

FGR reduces NOx emissions in two ways. The recycled flue gas is made up of combustion products which act as inert gases during combustion of the fuel/air mixture. This additional mass must also be heated in the combustion zone, which results in lowering the peak flame temperature and reducing the amount of NOx formed. To a lesser extent, FGR also reduces NOx formation by lowering the oxygen concentration in the flame and reducing the rate of combustion.

NOx Suppression with FGR

Exhaust gases are pulled from the stack or firebox and are injected into the inlet air stream as shown in Figure 303.1. This provides inert gases which act as a heat sink to lower the flame temperature and which act as a diluent to lower the oxygen concentration. These effects inhibit the thermal oxidation of nitrogen and can result in significant NOx reduction. Fuel NOx emissions are not significantly affected however. Proper heat exchange design is required to prevent a considerable loss of efficiency due to the lower combustion temperature.

Currently, the two most prevalent NOx control techniques being applied to natural gas-fired boilers are low NOx burners (Section 304.1) and flue gas recirculation. Flue gas recirculation is often used in combination with the low NOx burners. When used in combination, these techniques are capable of reducing uncontrolled NOx emissions by 60 to 90 percent. Flue gas recirculation rates are limited to about 15% of the combustion air rate for gas-fired boilers. Higher rates can cause the flame to become unstable. However, recirculation of 15% of the flue gas can achieve a thermal NOx reduction of up to 70% to 80%.

Because of the greater potential for flame instability and emissions of unburned fuel from oil-fired units, flue gas recirculation rates are generally limited at 10% to 12%. So reduction of uncontrolled thermal NOx is limited to 20% to 25%. There is little reduction of fuel NOx using FGR. We can see that FGR is usually most attractive for gas-fired boilers, although it can also be beneficial for oil-fired units.

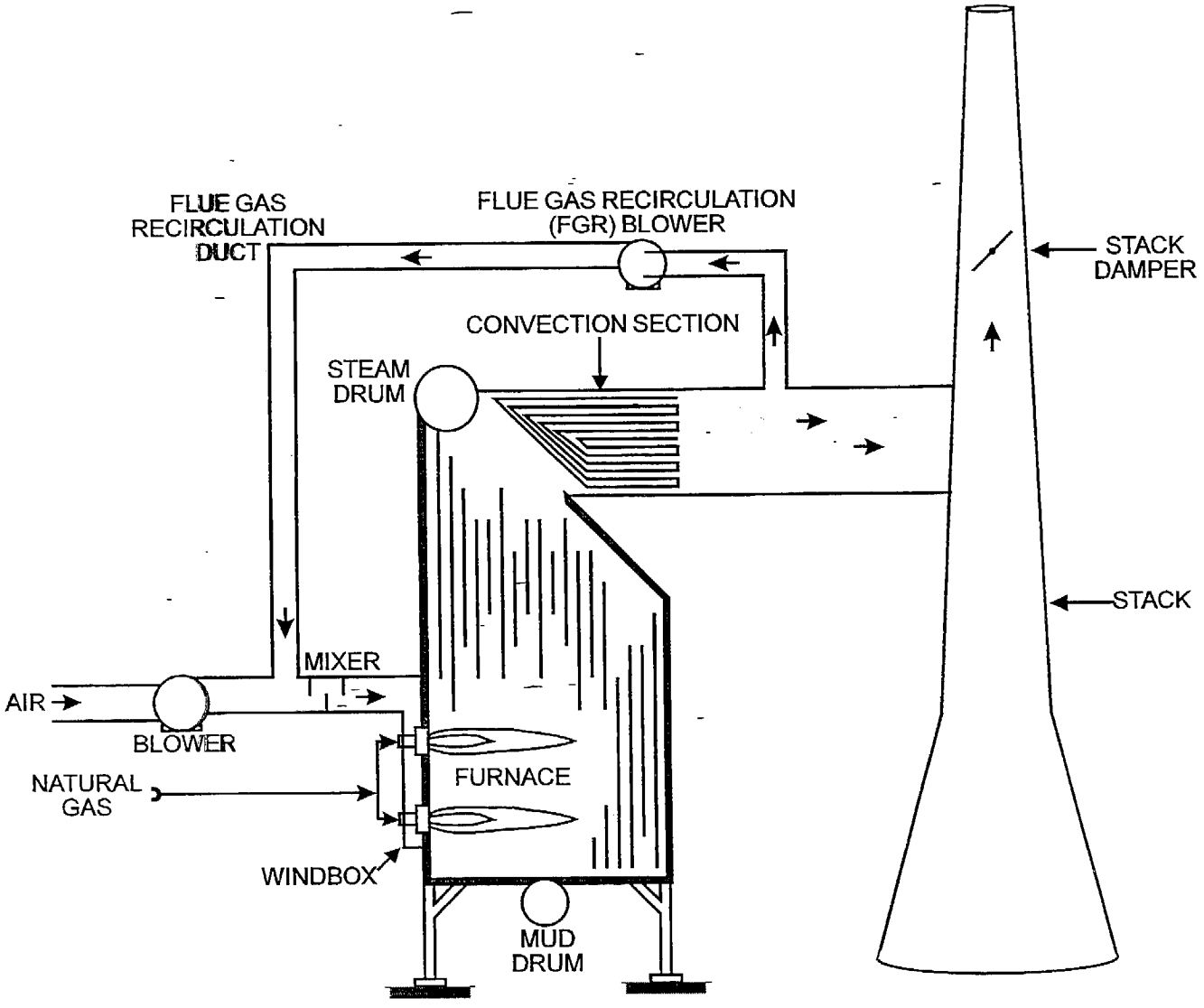

Figure 303.1
Flue Gas Recirculation System
(FGR)

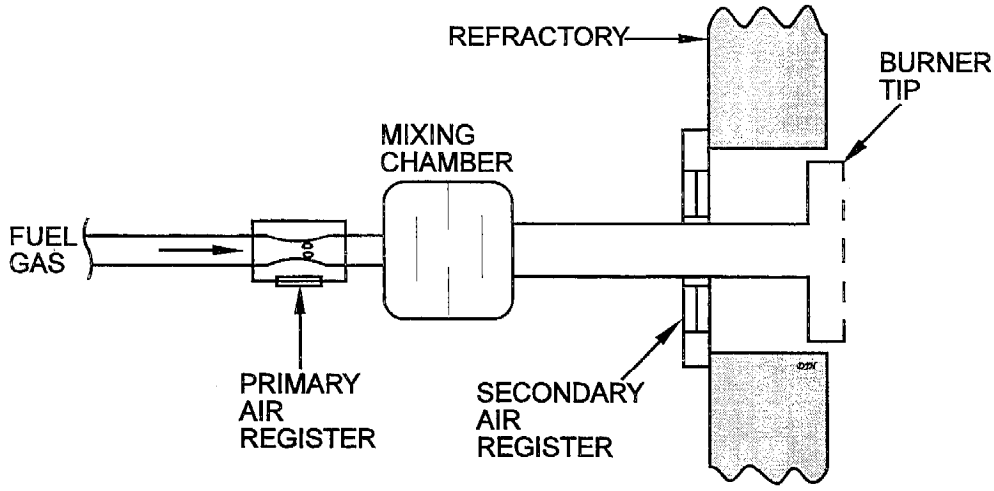

Figure 304.1
Gas Pre-mix Burner

304 GAS BURNERS

Pre-mix Burners

Conventional gas burners are generally the "**pre-mix**" type, where most of the air and fuel are mixed within the burner before they are introduced to the firebox and ignited. A pre-mix burner is illustrated in Figure 304.1. The air which initially mixes with the fuel is called the primary air. A small amount of additional air, called secondary air, is often added near the burner tip to ensure complete combustion.

Because the fuel and air are thoroughly mixed in a pre-mix burner prior to ignition, the combustion reaction takes place instantaneously and produces high flame temperatures. The flame appears as a compact blue cone, indicative of pre-mix burning and a high temperature. Thermal NOx production in these flames can be significant, near 0.2 pounds of NOx per million Btu of fuel. Compare this to the limits of 0.03 to 0.04 pounds NOx per million Btu for new-equipment in many air districts.

304.1 LOW-NO_x BURNERS

Burner modifications for NOx control involve changing the design of a standard burner in order to create a larger flame. Enlarging the flame results in lower flame temperatures and lower thermal NOx formation. This is most effective when firing natural gas. Reduction of NOx for fuel oil is adversely affected by the amount of fuel-bound nitrogen in the fuel.

NOx Suppression with Low-NOx Burners

Most modern gas burners are not the standard pre-mix type. Most can reduce NOx production during combustion by slowly introducing the fuel to the firebox in stages, by automatically recirculating firebox gases, or both. Many burners in furnaces in California are now the new low-NOx type and the technology is spreading rapidly throughout the state. New burners which precisely control the mixing of the fuel and air now promise to achieve extremely low NOx levels.

When primary air and fuel gas mix prior to combustion, a compact blue flame is formed and the flame temperature is typically high. When the fuel and air enter the furnace without having been well mixed, a larger, lazier yellow flame is formed and the flame temperature is lower. This flame characteristic will be beneficial when trying to distinguish pre-mix burners from low-NOx burners during an **inspection**.

The most stringent retrofit NOx restriction to date is 0.03 pounds per million Btu of heat input for some heaters. This limit is equivalent to approximately 25 ppm, although the ppm value varies somewhat with the fuel composition and the excess air used. By the end of 1997, at least 5 more California air districts will have NOx limits of 30 ppm for all but the smallest gas-fired boilers.

On natural gas and fuel gas fired systems, these limits have been achieved by either replacing conventional burners with "low-NOx" type burners, or installing catalytic NOx reduction, or both. Low-NOx burners are configured to adjust how the fuel and air are mixed in order to minimize NOx production. They may also include the addition of steam or water to the flame which also can reduce NOx production.

By injecting water or steam into the flame, flame temperatures are lowered and NOx production is reduced. There is a practical limit to the amount of water or steam that can be injected into the flame before condensation problems are experienced. Also, under normal operating conditions, water or steam injection can result in 3% to 10% boiler efficiency loss.

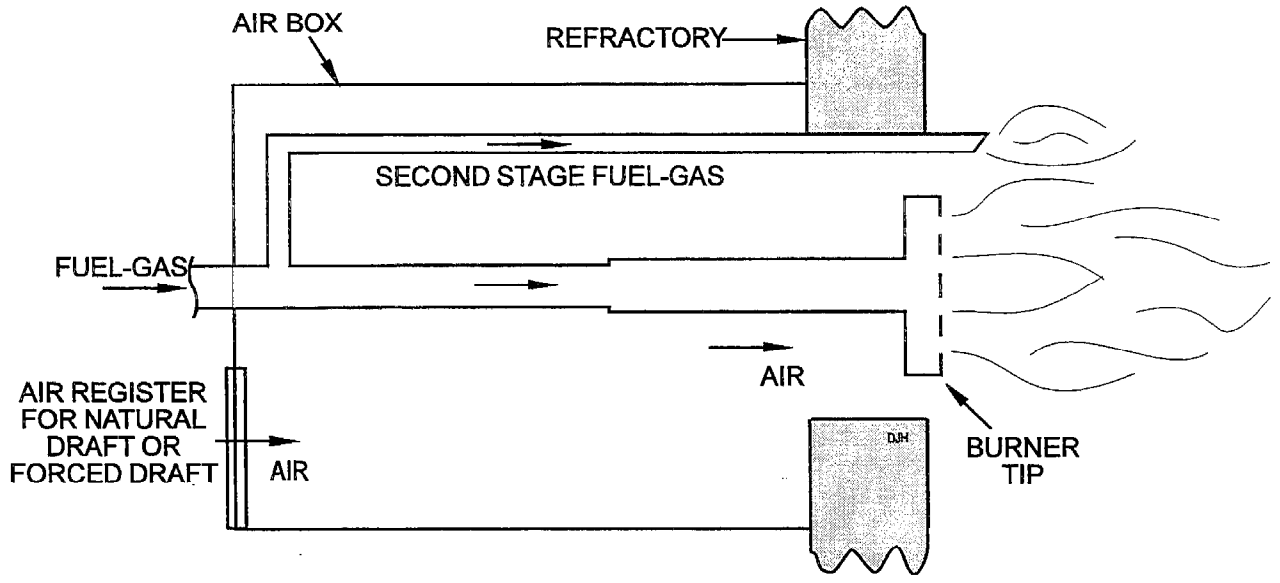

Figure 304.2
Low-NOx Burner with Staged Fuel

For large new installations, The Best Available Control Technology (**BACT**) standard is now near 10 ppm NOx which can be achieved by using Selective Catalytic Reduction (SCR). But new natural gas burner designs are reaching the 10 ppm level at very competitive costs and these ultra-low NOx burners are becoming popular.

304.2 STAGED FUEL BURNERS

A common method for lowering NOx production in gas-fired heaters is called **fuel staging**. This method is illustrated in Figure 304.2. First, part of the fuel is burned with excess air and the resulting air-cooled flame does not produce much NOx. Then more fuel is added to combust with the remaining air and the flame temperature is again kept low by the presence of the combustion gases and NOx production is again reduced. To assure that the low effluent NOx limit (about 25

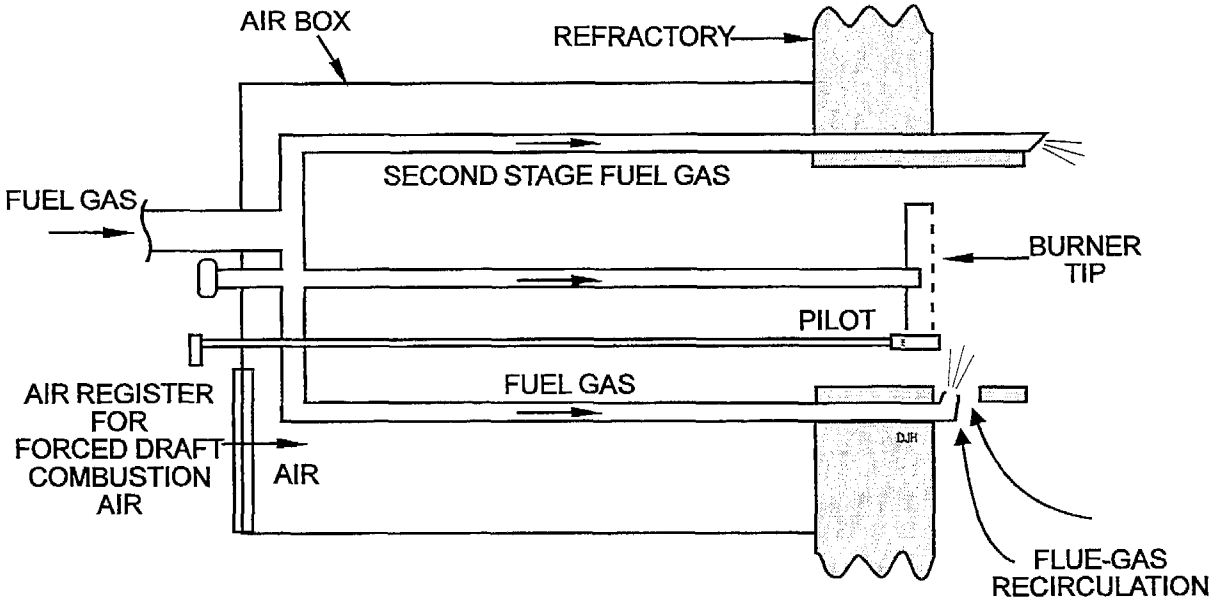

Figure 304.3
Modern Low-NOx Burner with Staged Fuel and Internal Flue-Gas Recirculation

ppm) can be met under adverse circumstances, some burners are equipped to allow steam to be injected to further cool the flame. The use of steam, however, is probably not an energy efficient means of control.

NOx Suppression with Low-NOx Burners

Recent gas burner designs usually do not need steam. Some of these incorporate **both fuel staging and internal flue gas recirculation** to reduce NOx. In this design, gases from within the firebox are recirculated to the burner. These gases, located along the floor or walls of the heater, are essentially the same as the combustion products found in the stack, and the recirculation process gives advantages similar to FGR. An example of an internal flue gas recirculation burner is illustrated in Figure 304.3.

Systems which burn LPG also use a combination of low NOx burners and flue gas recirculation. Some burner vendors use water or steam injection into the flame zone for peak temperature reduction. This is a control technique which

may be necessary during backup fuel periods because LPG typically has a higher NOx-forming potential than natural gas. Some natural gas emission control systems may not be sufficient to reduce LPG emissions to required levels.

Also, LPG burners are more prone to sooting under the modified combustion conditions required for low NOx emissions. Combustion modifications for LPG may be more limited than for natural gas.

305 OIL-FIRING BURNERS

Many California boilers are equipped to burn oils, either as a primary fuel, as a supplementary fuel, or as a backup fuel. These facilities convert to oil firing mode by inserting a burner tip designed for introducing atomized oil through the center of the gas burner. This "oil gun" as it is called, extends into the furnace beyond the gas burning components to protect them from heat damage. The oil gun is then removed when gas firing is desired.

305.1 OIL ATOMIZATION

To assure complete combustion in the furnace, fuel oils must be **atomized** into a mist of droplets at the burner tip. Air and steam are most often used for atomization and can often be used interchangeably in the same oil gun. At the tip of the oil gun, a high velocity jet of air or steam blows the oil into a mist through one or more orifices.

Atomization Using Steam

Large boilers seldom use air for atomization. Larger boilers are more likely to burn heavy residual fuel oils which usually can be atomized more efficiently using steam. The steam has another beneficial effect of reducing the formation of NOx. This NOx reduction effect has been proven but the chemistry of the reaction is not well understood. In addition to the chemical reaction, the steam also serves as an inert gas which cools the flame and inhibits NOx formation.

Atomization Using Air

Most firetube boilers use air atomization by means of an integral compressor and control system or a plant air system. The economics usually favor using steam for atomization on very large boilers and favor using air on smaller units.

305.2 LOW EXCESS AIR

Reducing the amount of excess air to the furnace from 5% to 3% can have a significant effect on NOx production, reducing NOx by 10% to 15%. But this procedure is trickier with heavy oil fuels than with natural gas. Success depends on the fuel properties and on the ability to control the air and fuel distribution to each of the burners. Equal or proportional distribution of air and fuel to each of the burners is essential and may require modifications to the air supply and fuel oil supply systems.

305.3 STAGED AIR COMBUSTION

NOx Suppression for Oil Burners

Air staging is a technique often used when burning fuels with fuel bound nitrogen, for example fuel oil or coal. In California, most coal is burned in fluidized beds, so we will concentrate here on oil-fired burners. Air staging is accomplished by dividing the combustion air into two or more streams. A portion of the air (about 70%) is used to form a fuel-rich primary combustion zone in which all of the fuel is partially burned. This creates a reducing atmosphere, starved for oxygen, which prevents a portion of the fuel-bound nitrogen from being oxidized to NO. Instead, it is converted to N_2. The unburned fuel cools the flame somewhat. And some of the heat that is generated is radiated to the boiler tubes, further cooling the gases before final combustion.

Combustion is completed with the injection of the remainder of the combustion air into a secondary burnout zone downstream of the fuel-rich primary zone. Again, combustion of the partially burned fuel produces less heat, the peak flame temperature is moderated, and NOx formation is reduced. Staged air systems have been used on oil-field steam generators and industrial boilers to achieve NOx emission reductions of 30% to 65%.

Some fuel oil burners can now incorporate the staged air techniques at the burner. More commonly, the secondary air is added through air ports, located above the burners. The design of the burners is still critical though, because the rates of fuel and air must be precisely controlled at each burner to provide optimum NOx reductions.

305.3.1 Oil Field Steam Generators

Low NOx firing for oil field steam generators was originally developed for use on boilers burning high nitrogen (0.7% to 1.0%) crude oil. NOx emissions from **crude oil-fired** boilers with no NOx controls are usually 0.30 to 0.52 pounds of NOx per million Btu of fuel, 3 to 4 times the level produced when burning natural gas. Most low-NOx burners for crude oil are not capable of reducing NOx emissions to below the uncontrolled gas-fired level. Where economically feasible, many oil field steam generators have been switched to natural gas, and many of these have low-NOx gas burners.

305.4 OVERFIRE AIR

NOx Suppression

A common staged-air NOx reduction method is the use of overfire air (OFA). Overfire air is often used in larger oil-fired boilers when the normal flow of gases is toward the top of the furnace. A portion of the combustion air is introduced at the burner with the atomized fuel oil. As in staged-air firing, an oxygen starved atmosphere is formed and some of the fuel-bound nitrogen is converted to N_2. Located just above the burners are ports where the remainder of the combustion air is injected, as shown in Figure 305.1. This is the overfire air and the air port is often called a NOx port. Completion of the combustion reaction is again at a somewhat lower temperature and NOx formation is discouraged.

Overfire air systems must be designed to ensure thorough mixing of air and combustion gases in the second stage of combustion. The air must have sufficient velocity to promote mixing into the center of the furnace. Sufficient residence times from the burner zone to the overfire air and from the air ports to the furnace exit are also critical to effective operation.

305.5 BURNERS OUT OF SERVICE

This is simply a crude method of achieving staged air combustion when overfire air ports or other secondary air ports are not available. Typically, the fuel supply is removed from one or more of the burners, but the air supply is allowed to continue through them. The fuel is redirected to the remaining burners to produce a rich fuel/air mixture. The result is very similar to overfire air or staged air combustion. However, because the furnace was probably not designed with staged air combustion as a priority, the air distribution and mixing may be poor.

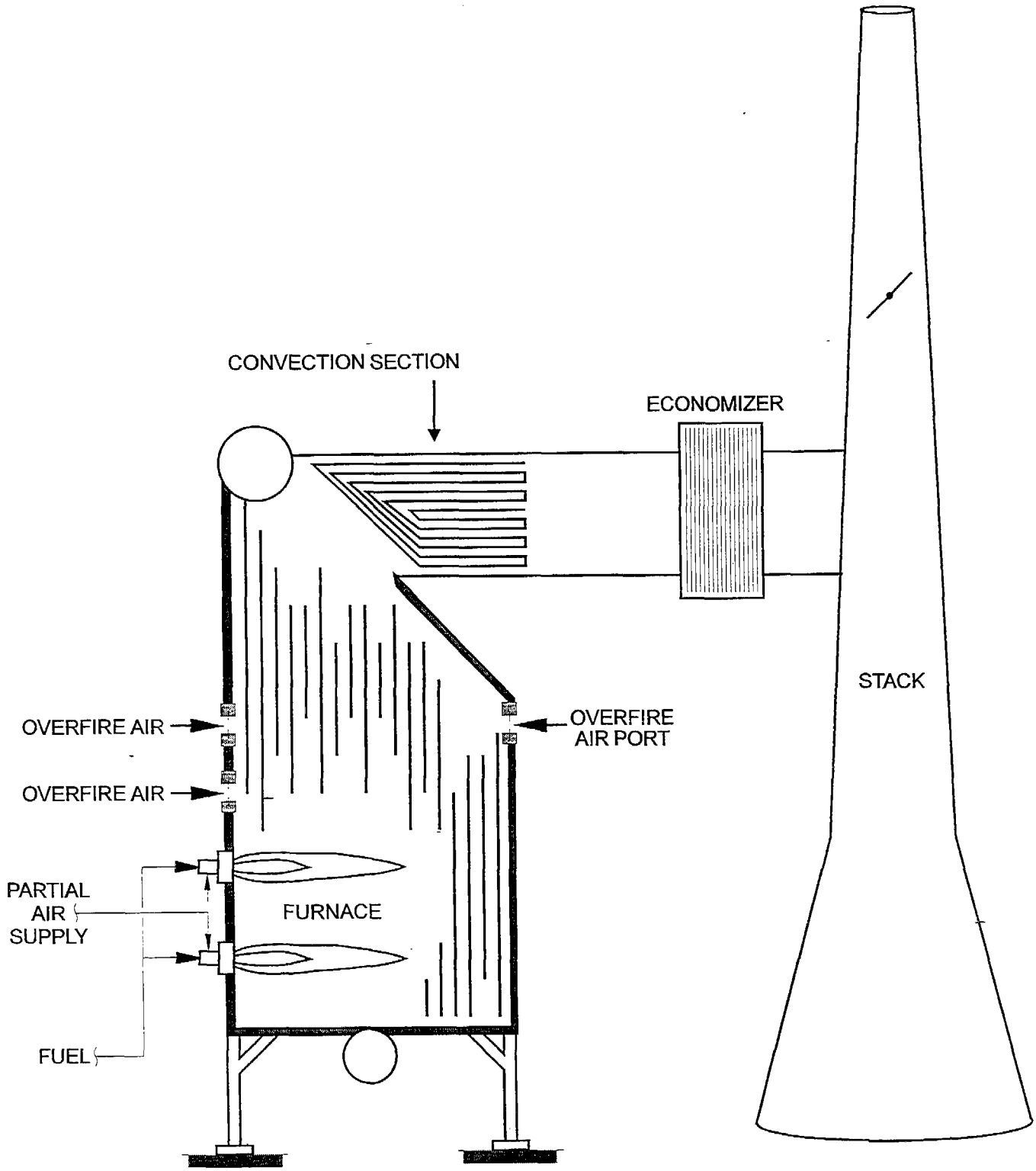

Figure 305.1
Staged Combustion Using Overfire Air

306 FUEL RATE REDUCTION

Reducing the fuel rate will reduce the rate of combustion and usually reduce peak temperatures and NOx formation. The load reduction could be achieved by energy conservation or by using additional boilers. However, facilities with limited steam production capacity may find that load reduction is not a feasible solution to a NOx emission problem.

307 FLUE GAS TREATMENT TO REMOVE NO_x

In addition to modification of the combustion reaction to prevent the formation of NOx, there are two common methods for converting NOx in the flue gas to nitrogen gas (N_2). These methods are Selective Catalytic Reduction (SCR) and Selective Non-Catalytic Reduction (SNCR). In general, NOx removal is accomplished by spraying a reducing agent into the flue system. A reducing agent is a chemical which preferentially reacts with oxygen, in this case removing oxygen from the NO and NO_2 and leaving N_2. Normally one of two reducing agents are used: ammonia (NH_3) or urea ($CO[NH_2]_2$).

307.1 SELECTIVE CATALYTIC REDUCTION (SCR)

Catalytic NOx Reduction

These units are catalyst beds designed to convert NOx to nitrogen and they generally require the addition of ammonia. An SCR unit is illustrated in Figure 306. The ammonia creates a reducing atmosphere, an atmosphere which consumes oxygen to the point that oxygen will be stripped from the nitric oxide (NO) leaving nitrogen gas (N_2). The most common names for this equipment are Selective Catalytic Reduction and SCR. An example of a retrofit SCR system is illustrated in Figure 307.1. Conventional catalyst beds are designed to operate at about 500 °F to 850 °F, a range that includes common stack gas temperatures for heaters equipped with convective heat recovery. Special catalysts are now available which can operate in the 400 °F to 500 °F range, but these are generally limited to natural gas fired systems with very low sulfur oxide concentrations in the flue gas.

A selective catalytic reduction (SCR) unit would likely be **located upstream of the air preheater**. Operation of the SCR unit is highly dependent on the temperature of the flue gas. The acceptable operating temperature is often

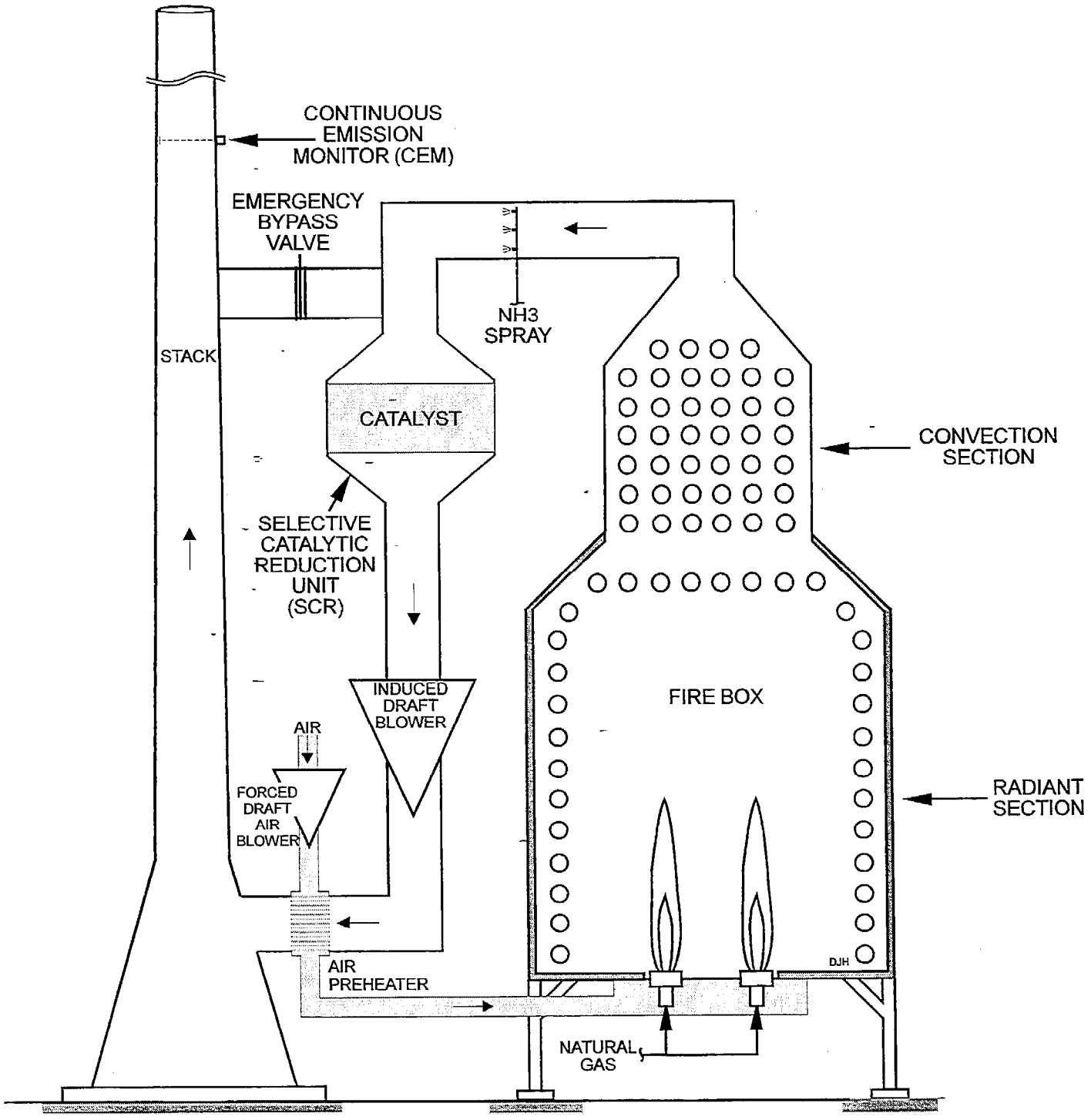

Figure 307.1
Boiler With Retrofit SCR System

between 500 °F and 850 °F while the optimum temperature is usually between 700 °F and 800 °F. If the SCR were located downstream of the air preheater, the temperature would likely be too low and the desired reaction converting NOx to N_2 would not occur. In retrofit situations, it is sometimes necessary to put the SCR unit downstream where temperatures are lower. It may then be necessary to install a **duct burner** to increase the flue gas temperature prior to entering the SCR. The duct burner is located in the flue gas duct and burns fuel (usually natural gas) to add heat to the flue gas. If the SCR were located upstream of the convection section, the temperature would be too high and the reaction equilibrium would favor NOx.

Catalytic NOx Reduction

The temperature of the catalyst bed is a critical parameter of SCR operation which determines the rate and extent of the NOx conversion. Often the Permit to Operate will include an allowable temperature range. Inspection of an SCR unit should include determining that the SCR temperature is close to historical and design values.

In spite of the high installation costs, SCR units are becoming widely used in California. They have become commonplace on large boilers in the South Coast AQMD and are now being installed in the Bay Area and Central Valley as well as other parts of the State. Operating and maintenance costs for SCR can also be relatively high because the catalyst may need to be replaced every two to five years. Air quality inspectors should be aware that the catalyst will probably lose its reactivity over time and that NOx removal efficiency will degrade.

SCR has been demonstrated on combustion units fired on gas, distillate oil and residual oil. However, SCR has not yet been successful on steam generators fired with crude oil, due to the impurities. In general, particulate matter levels must also be very low before entering the SCR unit to prevent deactivation and plugging. This may require clean fuels or pretreatment of the exhaust gas to remove particulates.

307.2 AMMONIA INJECTION SYSTEMS

In the presence of catalyst, ammonia (NH_3) will react with nitric oxide (NO) to form nitrogen gas (N_2) and water vapor (H_2O). The ammonia is typically vaporized and a controlled amount is diluted with air or steam. It is then sprayed into the flue duct using an arrangement of spray nozzles to assure an even

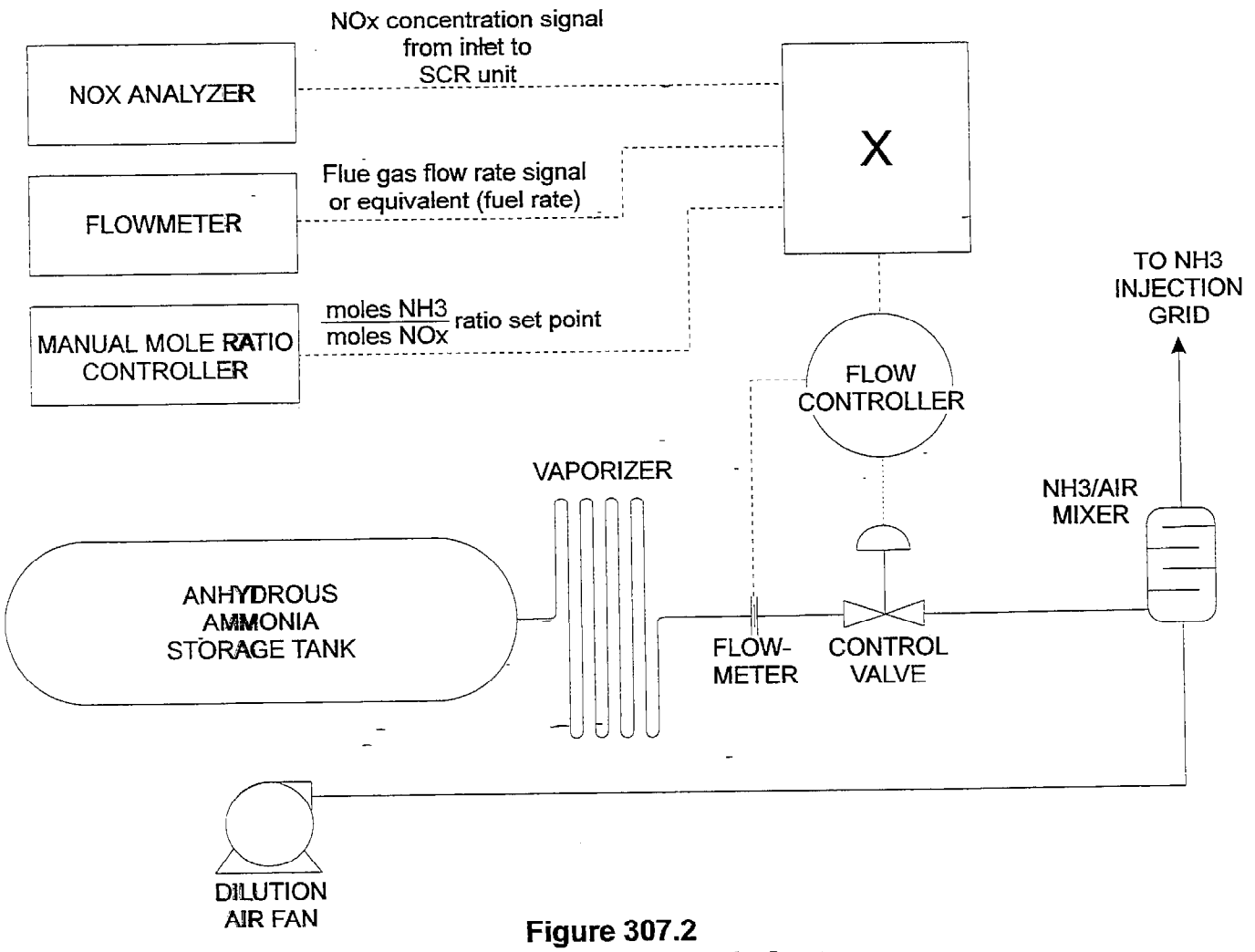

Figure 307.2
Anhydrous Ammonia Supply System

Ammonia and NOx Reaction

distribution throughout the flue gas. Approximately one mole of ammonia is injected for each mole of NOx present. The amount of NOx present can be determined using the flue gas flow rate and the NOx concentration as measured by a continuous emission monitor (see Figure 307.2). The flue gas then enters the SCR bed where the catalyst promotes the reaction. Under good conditions, this may result in conversion of about 90% of the NOx into N_2 and H_2O. Excess ammonia may pass through the catalyst bed and into the atmosphere. This is known as **ammonia slip** and in extreme cases may be visible as a yellow or brown plume from the stack.

Ammonia

Modern facilities are being designed to use **aqueous ammonia** (ammonia dissolved in water) instead of **anhydrous ammonia** (no water added). Anhydrous ammonia has some inherent safety hazards and significant precautions and safety equipment are needed when handling and storing it. The risks and safety related costs of anhydrous ammonia are now often found to outweigh the higher costs for transportation and storage of aqueous ammonia. Some California air districts have included in their regulations a requirement that new facilities not use anhydrous ammonia.

307.3 SELECTIVE NON-CATALYTIC REDUCTION (SNCR)

A second type of NOx reduction system, **Selective Non-Catalytic Reduction** (**SNCR** or SNR), operates at higher temperatures and does not require the expensive catalyst required by SCR. There are currently two basic types of SNCR processes available. An ammonia based system has been developed by Exxon called Thermal DeNOx. And a urea, $CO(NH_2)_2$ based system has been developed by the Electric Power Research Institute.

Non-Catalytic NOx Reduction

Operation of the SNCR unit is also highly dependent on the **temperature** of the flue gas. In the absence of a catalyst, ammonia or urea will selectively react with nitric oxide (NO) to form molecular nitrogen and water at temperatures in the range of 1400 °F to 2000 °F, although temperatures above 1700 °F are preferred. Below 1600 °F, chemical enhancers such as hydrogen are needed to help the reaction. Above 2000 °F, the ammonia or urea tends to react with any available oxygen to form NO. In the SNCR process, ammonia or urea is distributed into the flue gas at a point in the system where the temperature is within the required range.

The ammonia injection point for an SNCR system would usually be located **upstream of the convection section** as the flue gas leaves the furnace. This is illustrated in Figure 307.3. Depending on the system temperatures, the injection point might also be located downstream of part of the convection section. But if the ammonia injection were located downstream of the convection section, the temperature might be too low and the desired reaction converting NOx to N_2 would not occur. The ammonia cannot be added at the furnace because it would decompose at the high temperatures and the reaction equilibrium would favor NOx.

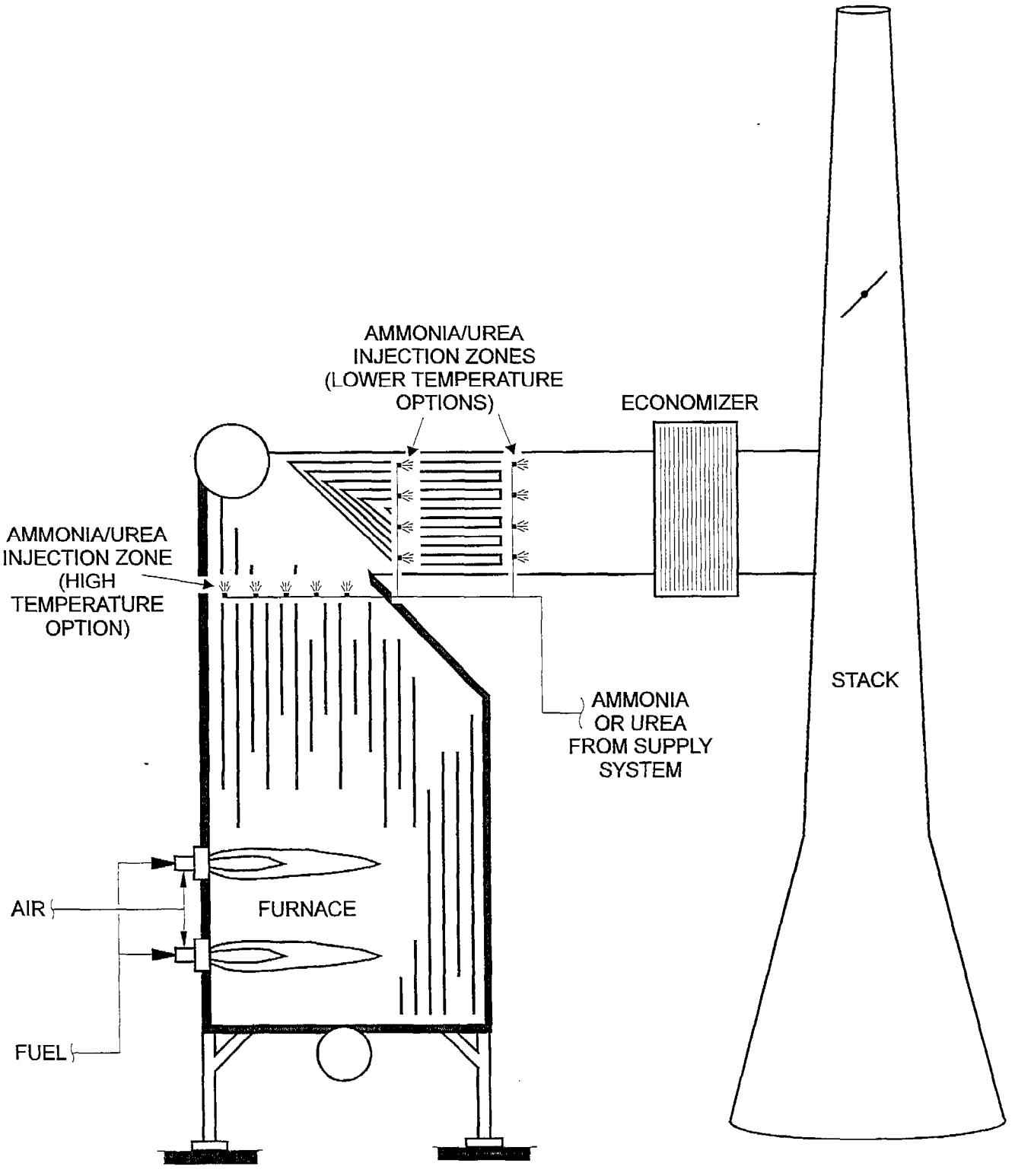

Figure 307.3
SNCR
(Selective Non-Catalytic NOx Reduction)

Reaction Temperature

One problem associated with the SNCR process is that temperatures within the flue gas system will normally change as the **boiler load** changes. Under high load, the flue gas temperatures are typically higher and the optimum ammonia injection point might be downstream of the convection section. Under low load, the flue gas temperatures are typically lower and the optimum ammonia injection point might be upstream of the convection section. Some SNCR systems include several ammonia injection locations in an attempt to overcome this temperature variation. This operation requires especially efficient temperature and NOx monitoring and diligent operator oversight. Often the Permit to Operate will include an allowable temperature range for the point of injection. Inspection of an SNCR should include determining that the temperature is close to historical and design values.

Ammonia is typically vaporized and diluted with air or steam or it can be injected in an aqueous solution. **Urea** is dissolved in water and atomized at injection. Aqueous solutions require a longer residence time in the boiler because the solution must be vaporized before the reaction takes place. The reducing agent is sprayed into the flue gas using an arrangement of spray nozzles to assure good distribution. The nozzles are generally located at various levels near the furnace outlet. The number and location of the nozzles are based on obtaining good reagent distribution throughout the flue gas.

Excess Ammonia

As with SCR, it is important to control the excess unreacted ammonia. As flue gas temperatures are reduced, the excess ammonia can react with other combustion by-products, in particular sulfur trioxide (SO_3), to form ammonium salts. Ammonium sulfate [$(NH_4)_2SO_4$] is a dry fine particulate (1 to 3 microns in diameter) that is sometimes visible as a plume from the stack. Ammonium bisulfate (NH_4HSO_4) is acidic and sticky and can cause corrosion and fouling in downstream equipment such as the economizer. Unreacted ammonia may also pass through the system and into the atmosphere. This is called ammonia slip, ammonia carryover, or breakthrough. In extreme cases, the ammonia slip may cause a yellow or brown plume from the stack.

Under good conditions, SNCR may result in conversion of about 35% to 70% of the NOx into N_2 and H_2O. NOx reductions of 30% to 50% are more typical when controlling ammonia slip and reagent consumption.

308 NO_x REDUCTION IN COAL-FIRED BOILERS

Although there is very little coal found in California, there are about twenty facilities that burn pulverized coal in fluidized bed combustors. Typically either petroleum coke or a low sulfur subbituminous coal from the Rocky Mountains are burned in a fluidized bed combustor. Most of these facilities produce electricity as well as process steam and are considered cogeneration systems.

308.1 FLUIDIZED-BED COMBUSTION

A fluidized bed starts as a bed of sand and/or crushed limestone. Air is blown up through a perforated air distributor into the sand until the sand begins to boil like a fluid. Pulverized coal is then added to the fluidized bed and burned. The air which fluidizes the bed is also the combustion air and the fluidization serves to mix the air with the fuel. This process is illustrated in Figure 308.1.

NOx Reduction in Coal-Fired Units

The bed of sand or limestone can reduce NOx emissions significantly. The bed serves as a large heat sink which keeps the temperature in the combustion zone at about 1500 °F to 1600 °F. In comparison, combustion temperatures from other pulverized coal burners and stokers can reach 3000 °F. This low temperature combustion inhibits the thermal formation of nitrogen oxides (NOx). However, fuel-bound nitrogen in the coal may still contribute to significant NOx formation.

309 SULFUR OXIDES (SO_x) CONTROL METHODS

Burning low-sulfur fuels has been the method of choice for reducing SOx emissions from boilers in California. Natural gas has been the predominant fuel choice, producing over 80% of the steam generated in the state. Low-sulfur fuel oils, various fuel gases, agricultural wastes, wood wastes, and coal are burned to generate the remainder of the steam. Consequently, there are few facilities which require special equipment to remove sulfur compounds from the flue gas.

309.1 SULFUR CONTENT OF FUELS

The amount of sulfur dioxide (SO_2) emitted is directly proportional to the amount of sulfur in the fuel. Sulfur levels are generally quite low in both natural gas and LPG. However, an odorous sulfur-containing mercaptan is added to

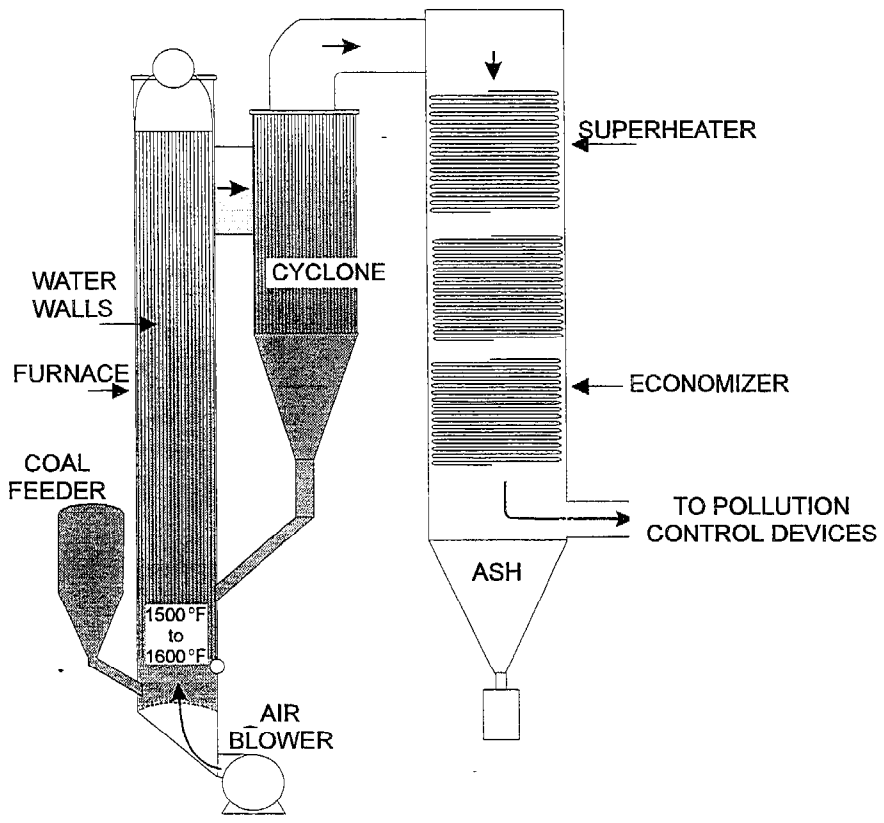

Figure 308.1
Fluidized Bed Type Boiler

these fuels to permit leak detection and small amounts of sulfur oxides are produced during combustion. Process gas or waste gas may have the potential to contain high levels of hydrogen sulfide (H_2S) or other sulfur compounds and may result in high SO_2 emissions if not properly controlled.

SOx Sources

Commercial **natural gas** is required to have a sulfur content below 5 parts per million by volume (ppm), including the mercaptans added to the gas as an odorant. At this sulfur level, almost any boiler in the state can burn natural gas

Table 309.1
Sulfur Content of Various fuels

Fuel	Sulfur Percent by Weight
Natural gas	0.0005
LPG	0.001
Fuel Oil No. 1	0.01 to 0.5
Fuel Oil No. 2	0.05 to 1.0
Diesel Motor Fuel	0.05
Fuel Oil No. 4	0.2 to 2
Fuel Oil No. 5	0.5 to 3
Fuel Oil No. 6	0.5 to 3.5
Low Sulfur Fuel Oil No. 6	0.5
Subbituminous coal from Rocky Mt. states	0.3 to 1
Petroleum coke	2 to 10

without being required to install SOx control equipment. Similarly, liquefied petroleum gas (LPG) has a low sulfur level (see Table 309.1) and SOx emissions are not a serious problem.

Sulfur in Fuels

The petroleum refining and petrochemical industries often make a by-product **fuel gas** stream which is used to fire boilers and heaters in the facility. This fuel gas can have high levels of hydrogen sulfide (H_2S) and mercaptan (e.g. CH_3-HS) and has the potential for excessive SOx emissions. The USEPA limits the H_2S content of fuel gases burned in these heaters to less than 230 milligrams per dry standard cubic meter (mg/dscm) or approximately 160 ppm by volume. The

SCAQMD formerly placed a limit of 40 ppm sulfur compounds, measured as H_2S, in fuel gas. The Regional Clean Air Incentives Market (RECLAIM) program now in effect in SCAQMD has replaced the 40 ppm limit with a facility wide limit on total SOx emissions, but this total facility limit should reflect an H_2S level near or below 40 ppm.

Sulfur in Fuels

Distillate fuel oils such as diesel also have relatively low sulfur levels in most cases. Currently, the sulfur level in diesel motor fuel is limited to 0.05% or 500 ppm by weight. Raw distillate fuel oils, on the other hand, might have sulfur levels ranging from 0.05% to 1%. These diesel-range oils are generally more expensive than other common fuel types and are burned less often. Diesel is however a common standby fuel for boilers, especially smaller ones.

The heavier fuel oils generally contain still more sulfur (see Table 309.1). **Fuel oil number 6** is the most common and can contain over 3% sulfur. Fortunately, most of California prohibits burning this high sulfur fuel, but allows burning of the low sulfur type of fuel oil number 6. Low sulfur No. 6 oil is defined as having less than 0.5% sulfur by weight. Still, low sulfur fuel oil number 6 contains much more sulfur than diesel or natural gas.

The **subbituminous coals** from Wyoming, Colorado and Utah, which are burned in California at some facilities, generally contain 1% or less sulfur. **Petroleum coke**, however, ranges from 2% to 10% sulfur and averages less than 5%.

Wood wastes, vegetation wastes, and other biomass fuels generally have low sulfur content in the range of 0.1% or less.

309.2 FUEL MONITORING

The Permit to Operate for a boiler generally requires the operator to have the fuel tested periodically and to maintain records of the fuel analysis. This analysis must typically include the sulfur content of the fuel. For some boilers without continuous monitors for SOx, this analysis, along with the amount of fuel burned, will be the only way to determine SOx emissions. Common commercial fuels, in particular natural gas, have known characteristics and testing these is normally not required.

309.3 SULFUR REMOVAL DURING COMBUSTION

SOx Removal in Fluidized Beds

Fluidized-bed combustion of coal and petroleum coke make it possible to absorb some of the sulfur compounds as the fuel is being burned. If the absorption of sulfur dioxide (SO_2) is required, limestone (calcium carbonate or $CaCO_3$) is added to the bed. At the fluidized bed temperatures, the limestone decomposes into calcium oxide (CaO or quicklime) and CO_2. CaO then reacts with any SO_2 in the flue gas to form calcium sulfate ($CaSO_4$). $CaSO_4$ is then removed from the system as a solid for disposal.

Most coals, including the low sulfur subbituminous coals from the Rocky Mountain states and petroleum coke, contain enough sulfur to cause SOx emissions problems when they are burned. By using a fluidized-bed of crushed limestone instead of sand, 90% of the SO_2 can be absorbed.

309.4 FLUE GAS DESULFURIZATION

Although most California facilities have chosen to burn low-sulfur fuels, a relative few have chosen to control sulfur oxide emissions by removing SO_2 from the flue gas. There are four main families of flue gas desulfurization (FGD) systems:

- wet slurry throwaway scrubbing
- wet solution throwaway scrubbing
- wet sulfur producing scrubbing
- and dry scrubbing

Practically all scrubbers are wet scrubbers; few dry scrubbers are in operation. And few, if any, boilers in California are equipped with scrubber systems that produce elemental sulfur. We will discuss only wet throwaway scrubbing.

In wet scrubbing, the flue gas is sprayed with an absorbent liquid such as a limestone slurry or a soda ash solution. The lime or soda ash then react with the SO_2, removing it from the effluent gas. Two types of equipment, the spray tower scrubber and the venturi scrubber, are commonly used to contact the absorbent liquid with the flue gas.

309.4.1 Spray Tower Scrubbers

The flue gas enters near the bottom of the spray tower and flows up and out of the top. The slurry or solution of reactive reagents is sprayed through a number of nozzles at the top of the tower and settles to the bottom of the tower. This is known as a countercurrent flow arrangement. As the flue gas exits the tower, it passes through a demister pad (or its equivalent) to remove as many of the small droplets of liquid as possible from the gas. A spray tower is illustrated in Figure 309.1.

Spray Nozzles

Near the top of the tower are the spray nozzles and below them is the spray zone. The spray nozzles are arranged to cover the entire tower cross section and saturate the flue gases. Several layers of nozzles may be used and packing or trays may also be installed in the tower to improve liquid/gas contact.

Corrosion

The tower inlet is exposed to both the hot, dry inlet gases and the corrosive absorbent slurry. This wet/dry zone is prone to plugging by deposits of solids and to corrosive failure. It sees very acidic conditions with high chloride and fluoride levels. The solids in the slurry can be very abrasive when they are sprayed on internal surfaces. The liquor is corrosive and can have high chloride levels which attack stainless steels. The spray zone is also exposed to both corrosive and abrasive conditions.

Scrubbers to remove sulfur compounds and/or particulates are normally located just before the stack or in the base of the stack. The cleaned flue gas, which rises out of the stack, is saturated with water and may be acidic. In order to prevent condensation of acids within the stack and possible corrosion problems, the stack gas may be reheated. A common reheat method is to use a heat exchanger to transfer heat from the incomming gas to the scrubbed gas.

SOx Removal Efficiency

Wet scrubbers are usually designed for efficiency of 80 to 90 percent SO_2 removal. Additives such as magnesium-enhanced lime or adipic acid may improve the efficiency by 5-10%, raising it to 95-99%. These performance levels are proven for both high and low sulfur fuels.

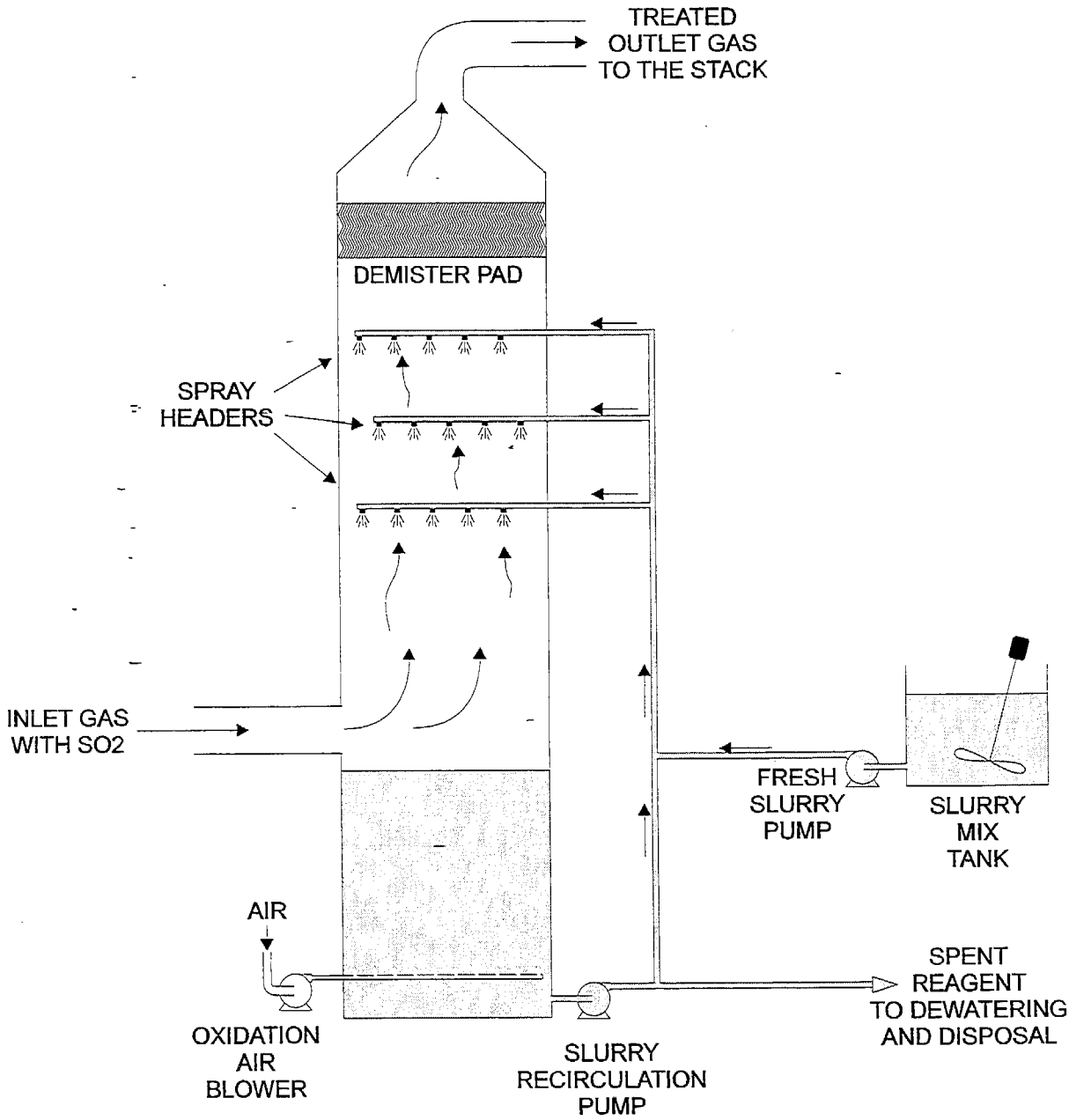

Figure 309.1
Spray Tower SOx Scrubber

Steam generators used in enhanced oil recovery at heavy oil production fields are sometimes fired with crude oil. Many of these are equipped with wet scrubbers and most of these are of the spray tower type. After treatment, the flue gas passes through a demister and exits the top of the tower, usually straight up the stack to the atmosphere.

309.4.2 Venturi Scrubbers

Venturi scrubbers use high velocity flue gas to improve atomization of the scrubbing liquid and to increase the active surface area of the absorbent. A fan is used to blow the flue gas into a venturi throat. The scrubbing liquid is also injected into the venturi. The gas enters the venturi throat and is accelerated to a high velocity, which atomizes the liquid droplets and promotes good liquid/gas contact.

Venturi Scrubbing

After passing through the venturi throat, the flue gas enters a larger separation vessel. Here the gas slows down and most of the scrubbing liquid, rich with newly absorbed SO_2, drops out into a liquid storage area at the bottom of the vessel. The flue gas then passes through a demister section before entering the stack. The demister collects small entrained droplets and returns them to the liquid. A venturi scrubber is illustrated in Figure 309.2.

Early flue gas desulfurization facilities were designed to remove both particulates and SOx. These venturi scrubbers were found to have excessive energy requirements, and have fallen somewhat out of favor for new installations. Some existing units, however, are still in operation.

309.4.3 Slurries and Solutions

SOx Absorption

In wet scrubbers, chemical reagents are mixed with water and sprayed through the flue gas to scrub (or absorb) the sulfur compounds. The reagents are usually an alkali material such as calcium in the form of lime or limestone, or sodium in the form of minerals such as nahcolite ($NaHCO_3$) or trona ($Na_3(CO_3)(HCO_3)\cdot 2(H_2O)$). If the reagents are insoluble in water, as are lime and limestone, the powdered reagents are mixed violently with water until the powder is suspended in water. This suspension, or **slurry** as it is called, is used in **wet slurry throwaway scrubbing**.

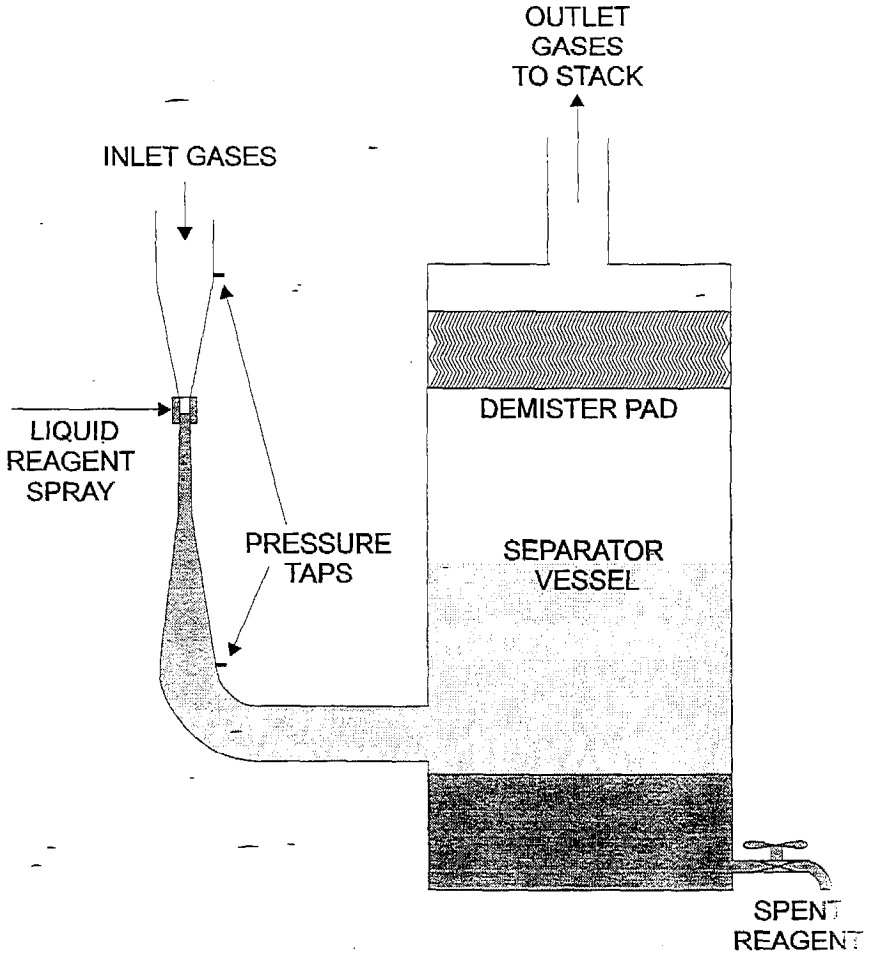

Figure 309.2
Venturi Scrubber

Reagents in Solution

If the reagents are soluble, as is trona (an acidic sodium carbonate), the powdered reagents are dissolved in water. This solution is used in **wet solution throwaway scrubbing**. Wet solution systems are easier to operate and maintain, but wet solution systems can produce water soluble waste which can pose a greater problem with ground water contamination.

Sulfur dioxide is absorbed by the slurry or solution in the scrubber and the chemicals in the water react with the sulfur dioxide, producing sulfite and sulfate compounds. The scrubbing liquid and the absorbed sulfur dioxide fall to the

bottom of the scrubber and enter a holding tank where chemical reactions are allowed to continue to completion. Often compressed air is bubbled through the mixture to encourage the oxidation reaction and form sulfates (gypsum).

Disposal

The solution may be disposed of or it may be sent to a chemical plant where sulfuric acid or elemental sulfur is produced. In some systems some of the absorbent liquid may be treated and sprayed again in the scrubber.

309.4.4 Wet Slurry Throwaway Scrubbing

Wet slurry throwaway scrubbing is the most popular type of flue gas desulfurization system. Most of these scrubbers use a lime or limestone slurry and are designed to remove between 85 to 95% of the SO_2 from flue gas.

Reagents in a Slurry

The lime and limestone type scrubbers have relatively low capital, operating and maintenance costs. On the other hand, these systems have waste sludge problems. Large amounts of calcium sulfate, calcium sulfite and unreacted lime or limestone and water are produced. The waste must be treated before being sent to a landfill. Deposits and scale can form in the scrubber system and plug equipment. And the lime and limestone reagents can be used only once before disposal.

Magnesium-Enriched Lime and Limestone Scrubbing

Magnesium

This system uses magnesium to react with sulfur dioxide instead of the calcium found in regular lime and limestone. The products from the absorption and chemical reaction with sulfur dioxide within the scrubber are primarily magnesium sulfite ($MgSO_3$) and magnesium sulfate ($MgSO_4$). These products are more soluble, so more sulfur dioxide can be absorbed without increasing scale problems. On the other hand, magnesium enriched lime is more expensive than regular lime.

Lime or Limestone Scrubbing with Adipic Acid

Adipic Acid

Adipic acid is an organic acid that reduces the formation of scale in the scrubber, increases absorption efficiency and helps control the pH of the scrubbing liquid. A problem with this system is possible odor problems from decomposition of the acid.

SOx Removal

Limestone with Forced Oxidation
This is another variation of the traditional wet scrubber. In the forced oxidation process, compressed air is bubbled through the sulfite slurry in the recirculation tank. This causes the calcium sulfite, which was originally formed in the spray tower, to be completely oxidized to form gypsum (calcium sulfate). Because of the larger size and structure of gypsum crystals, they settle and dewater better than calcium sulfite crystals. Smaller dewatering equipment may be adequate and the waste product gypsum may have commercial value for wallboard or agricultural soil amendment.

309.4.5 Wet Solution Throwaway Scrubbing

Wet solution throwaway scrubbers use a reagent that dissolves in water, producing products from reacted sulfur dioxide that are soluble in water, unlike the slurry type of FGD scrubber. By using a reagent that is soluble with water, scaling and plugging problems are reduced. On the other hand, water soluble reagents are generally more expensive.

Trona

Aqueous Sodium Carbonate Scrubbers
This type of system uses a naturally occurring compound called "trona," which is an acidic sodium carbonate which can absorb and react with sulfur dioxide. The aqueous sodium carbonate system differs from slurry type systems mainly in the recirculation and disposal part of the operation. Once liquid has passed through the scrubber it is acidic and is neutralized with alkaline solids. Some of the used scrubbing liquid is drained off with the alkaline solids and sent to the disposal system. Water and sodium carbonate are added to the remaining scrubbing liquid and it is again sent through the scrubber.

Dual-Alkali Scrubbers
In the dual-alkali process an alkali is used in the scrubber and another one is used in the holding tank. This process combines elements of the lime and limestone process and the aqueous sodium carbonate process. The alkalis that are used to absorb and react with sulfur dioxide are sodium hydroxide or sodium sulfite. These substances are mixed with the water before being sprayed in the scrubber. Once the sulfur dioxide is absorbed, it reacts with the alkalis, producing soluble sodium sulfate. When the scrubbing liquid enters the holding tank after passing through the scrubber, the second alkali, calcium, is added in the form of lime or limestone. The sodium in the reacted product is replaced by calcium, forming calcium sulfite and calcium sulfate solids.

Since solids are formed outside the scrubber, plugging and scaling is reduced. The waste produced by this system is less polluting than the aqueous sodium carbonate scrubber, since it is less likely to dissolve into ground water.

310 PARTICULATE CONTROL

In most cases, gaseous and oil fuels can be burned carefully so that very little particulate matter is produced. Particulate removal equipment is often not necessary and relatively few boilers in California will have these controls. Some notable exceptions are the coal or coke burning fluidized-bed systems, biomass facilities, and the oil field steam generation equipment which may burn crude oil. Solid fuel burning facilities often require particulate controls such as the baghouse or electrostatic precipitator, as noted in the following sections.

Particulate matter is composed of filterable and condensable fractions. The EPA sampling method measures the filterable fraction only while CARB Method 5 measures both fractions. More commonly particulates are recognized as smoke. Smoke is measured by using an opacity instrument or by a trained eye using the Visible Emission Evaluation method.

Particulate Control

Filterable and condensable emission rates are similar for natural gas-fired boilers; for residential gas furnaces, most of the PM is in the form of condensable material. All particulate matter (PM) from natural gas combustion is estimated to be less than 1 micrometer in size.

Particulates generally will be reduced when a lighter grade of oil is fired. That is, fuel oil no. 5 will produce less PM than fuel oil no. 6.

310.1 FUEL OIL ATOMIZATION

To assure complete combustion in the furnace, fuel oils must be atomized into a mist of droplets at the burner tip. The fuel is atomized to increase its surface area which allows it to vaporize and allows oxygen to contact and react with the fuel rapidly. Poor atomization is often responsible for incomplete combustion and high particulate emissions (smoke and ash) from the stack.

Air and steam are most often used for atomization and can often be used interchangeably in the same oil gun. At the tip of the oil gun, a high velocity jet of air or steam blows the oil into a mist through one or more orifices. The orifice size and orientation, as well as the fluid pressures, affect the spray pattern and the flame shape. Diagrams of the tips of several oil guns are shown in figure 310.1.

Fuel Oil Atomization

The differential pressure between the oil and the air or steam controls the size of the droplets in the mist. A higher differential pressure generally produces a finer mist. If the **droplet size** is too large, incomplete combustion will occur and black smoke may be visible from the stack. A fine mist is a benefit to combustion but it has an operating cost and should not be overdone. A considerable amount of energy and equipment is necessary to produce large amounts of atomization air.

Atomization Using Air

Air atomization is commonly used on package boilers, however. Atomization of lighter distillate fuel oils (e.g. diesel) can be accomplished easily using air. Small package boilers often burn diesel, especially as a backup fuel for natural gas. These require small air compressors which are relatively inexpensive and reliable.

The desired shape of the atomization pattern and droplet size can be affected if the nozzles become clogged, eroded, or cracked or if the fuel viscosity changes. This could result in incomplete atomization, large droplets, and incomplete combustion.

Atomization Using Steam

Large boilers seldom use air for atomization. Larger boilers are more likely to burn residual fuel oils which usually can be atomized more efficiently using **steam**. The steam has another beneficial effect of reducing the formation of NOx. This NOx reduction effect has been proven, but the chemistry of the reaction is not well understood. Also the operating cost of using steam for atomization is less than the cost for air on larger units.

310.2 FLUIDIZED BED COMBUSTORS

Fluidized beds allow some control over the combustion of pulverized coal and petroleum coke and other solid fuels. The fuel is "fluidized" by blowing air through it and lifting the bubbling bed of fuel upward through the furnace as the fuel is consumed. A particulate such as crushed limestone or sand is mixed with the fuel as it is burned and offers some control of the combustion rate. If the fuel

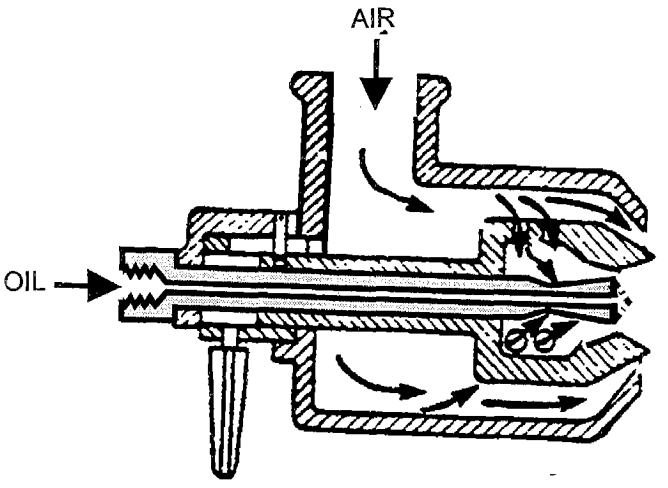

Low-Pressure Air-Atomizing Burner

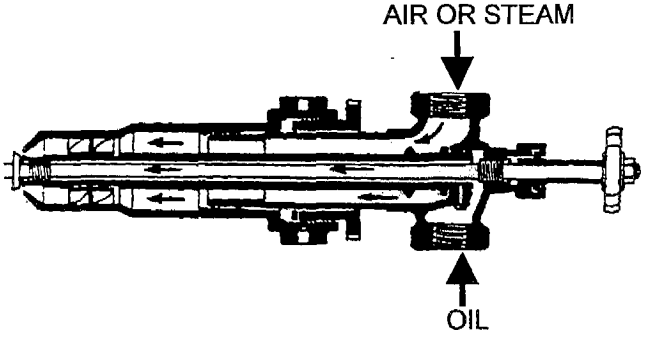

Steam or Air-Atomizing Burner

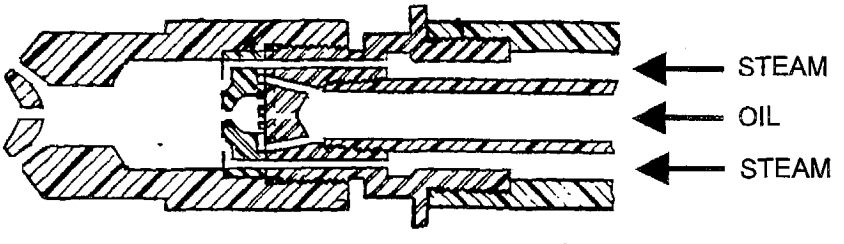

Steam-Atomizing Burner
with Internal Mixing

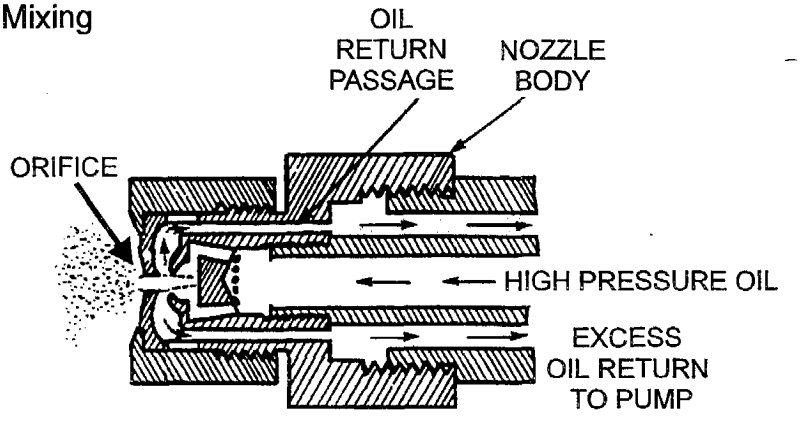

Mechanical Fuel Oil Atomizer

Figure 310.1
Fuel Oil Burner Tips

is high in sulfur, as with petroleum coke or coal, limestone is circulated in the fluidized bed to absorb the SOx as it is being formed. If the fuel contains very little sulfur, sand can be circulated instead.

The presence of the sand or limestone particulate allows some control over the temperature of the combustion. If a lower temperature is desired, for example, the particulate is circulated at a faster rate relative to the fuel. Lower temperatures reduce the formation and emission of NOx. There is an optimum operating temperature, near 1550 °F, which maximizes the removal of SOx. While most of the particulate is collected by gravity, a portion is carried over in the flue gas and must be removed using an electrostatic precipitator or a baghouse.

310.2.1 Fluidized Bed Particulate Control

Particulate Removal

In a fluidized bed combustor system, the convection section may be protected by solids removal structures such as baffles, U-beams, or cyclones to prevent the entrained solids from fouling the convection tubes. In these structures the gases encounter various changes of direction which cause the entrained solids to impinge on the baffles and lose velocity. The majority of the solids then fall into a particle storage hopper, either for re-addition to the fluidized bed or for disposal.

Some of the smaller particulates do get past these main collectors and must be captured before the flue gas is emitted to the atmosphere. A common method of collecting these solids is by filtering the flue gas through a collection of bag-type fabric filters located in a baghouse. For a complete discussion of the function and inspection of baghouses, please refer to the CARB manual Baghouses, produced by the Compliance Assistance Program. The following is offered as a short description of a baghouse.

310.3 BAGHOUSES (MULTIPLE FABRIC FILTERS)

In most baghouses, filter bags are supported on the inside by a cage which gives the bags their shape. Flue gases enter the baghouse and flow through the bags from the outside to the inside. The solid particles collect as a cake on the outside of the bag. The clean flue gases flow from inside the filter bag to an outlet plenum and then to the stack. This is illustrated in Figure 310.2.

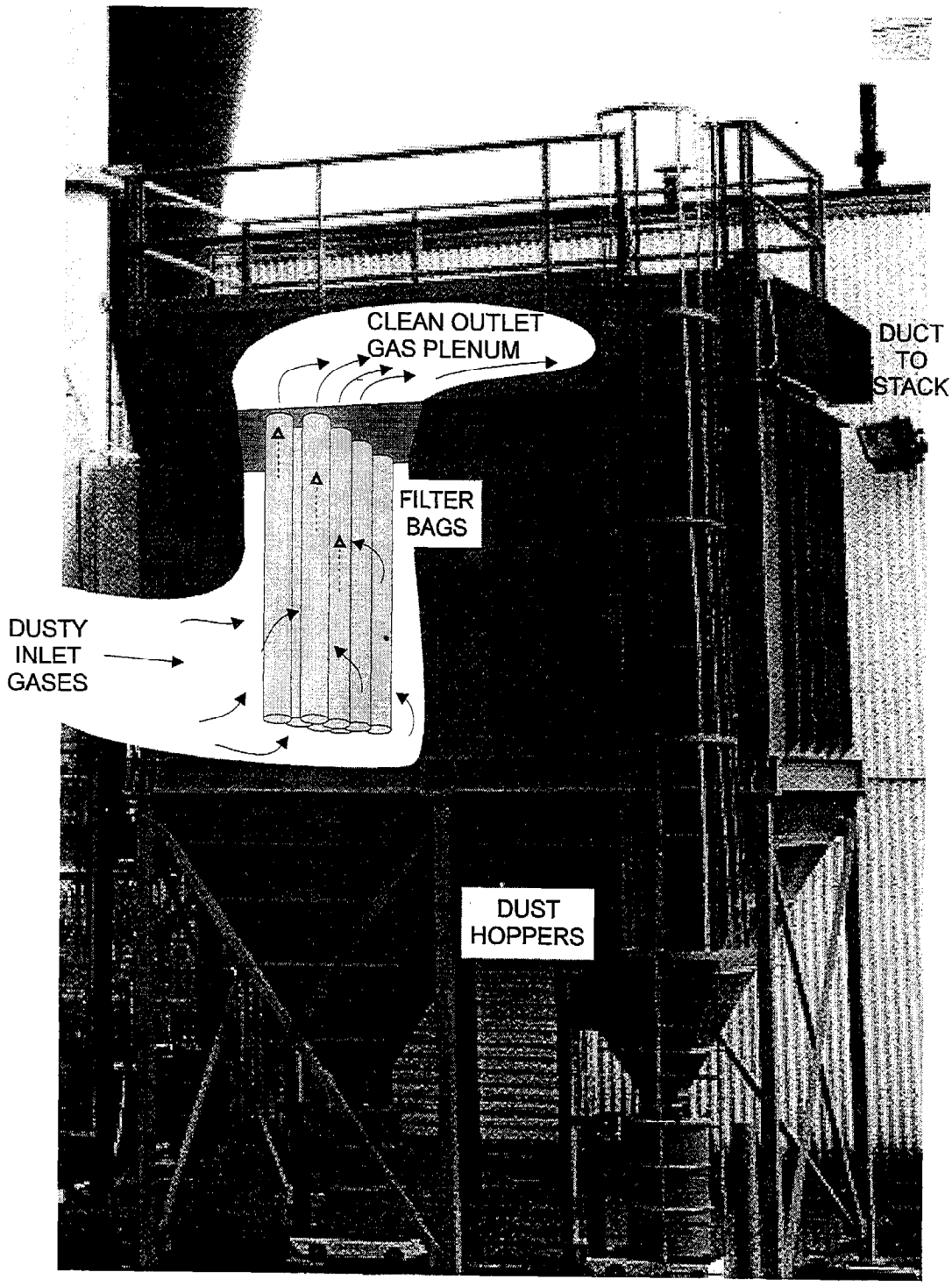

Figure 310.2
Baghouse for Particulate Removal

Baghouses

As particles build up on the filter bags, the flow of gas through the filter is obstructed and the pressure drop across the filter increases. The cake of particles on the filter must then be removed. Two common methods are used for cake removal. First, in the pulse jet system, the bags are cleaned by sending a high pressure pulse of compressed air to each bag. The sudden pulse of air generates a pressure wave which travels down the inside of the bag. The pressure wave also causes some filtered gas to flow backwards through the bag (from inside to outside). The bag is puffed out and the dust cake cracks and falls off into a hopper which is located at the bottom of the baghouse. Cleaning is normally performed on a row by row basis while the baghouse is operating.

Some fabric filters are cleaned by the reverse air method. A reverse air baghouse must be divided in compartments. During cleaning, the gas flow through one compartment is stopped, and filtered gas is passed in a reverse direction through the bags in that compartment, thus the name reverse air. Again the dust cake falls into a hopper for removal. A baghouse to remove particulates would normally be located downstream of the air preheater just before the stack.

Efficiency

Baghouses have been used extensively during the last 10 years because they are very efficient at dust collection. Particulate removal equipment must often remove over 99% of the dust from an exhaust stream. For dust removal efficiencies over 99%, baghouses are often the most cost effective method available.

Maintenance

Baghouses must be vigilantly maintained. The bags must be cleaned properly and in a timely manner. The bags can also become damaged by abrasion, heat, and chemical attack. Damaged bags typically allow dirty gas to leak through to the baghouse outlet, resulting in a loss of dust removal efficiency and a dirty plume from the stack. Maintenance workers must use care not to damage the bags with hands, feet, or tools. Improper care can destroy the bags quickly.

310.4 ELECTROSTATIC PRECIPITATOR (ESP)

Flyash particulates can be removed from the flue gas by a large piece of equipment known as an electrostatic precipitator (ESP or simply precipitator). The precipitator imparts a negative electrical charge to the particles and the particles are then attracted to and deposited on positively charged collection plates. Precipitators are often the most cost effective means of removing dusts, especially for large units when the required efficiency is below 99.5%.

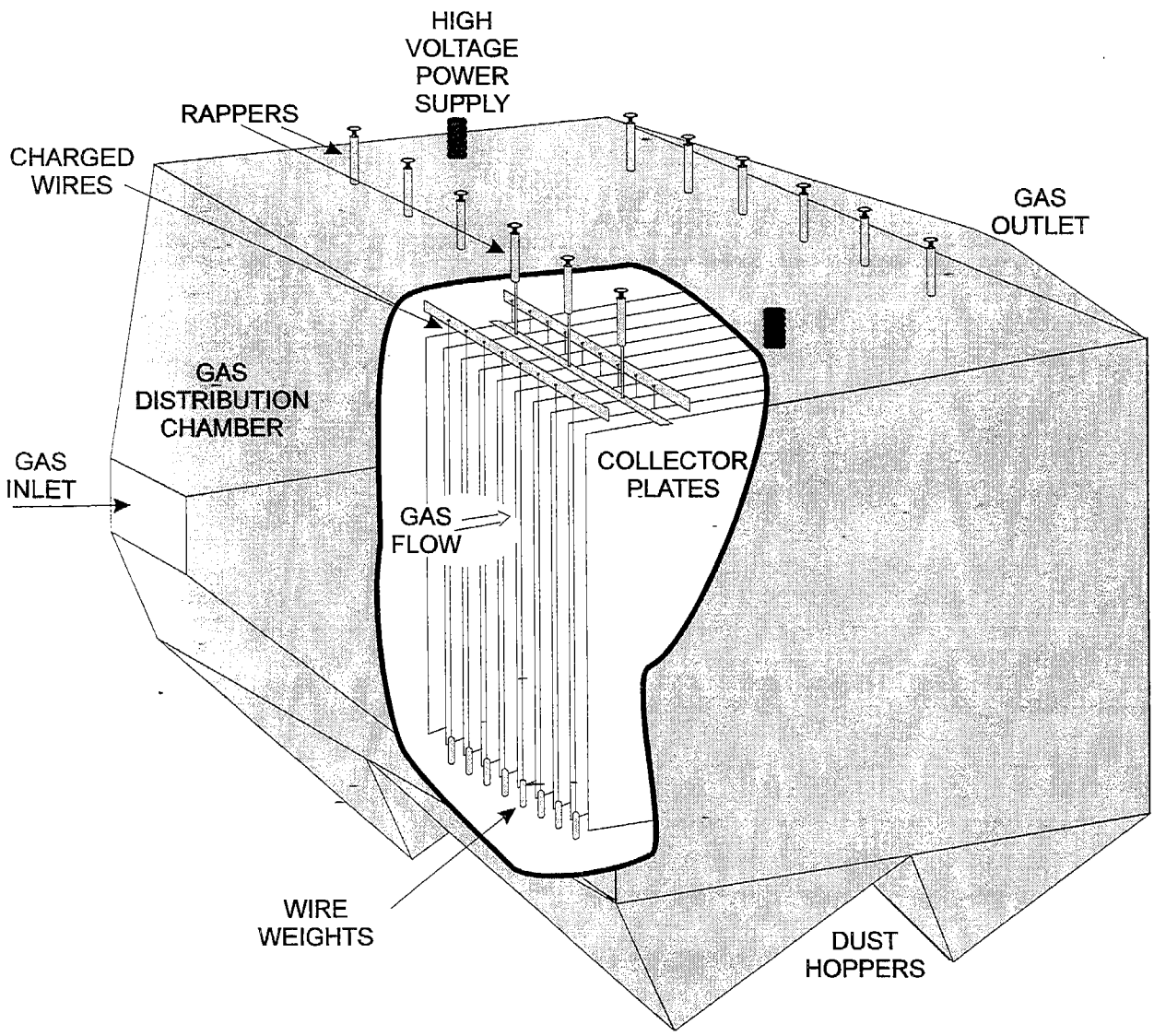

Figure 310.3
Electrostatic Precipitator

Electrostatic precipitators are commonly used in oil fired power plants. Older precipitators, usually small, remove generally 40 to 60 percent of the particulate matter. Because of the low ash content of the oil, greater collection efficiency may not be required. Today, new or rebuilt electrostatic precipitators have collection efficiencies of up to 99 percent. A simplified illustration of an electrostatic precipitator is shown in Figure 310.3.

For a complete discussion of the process and inspection of precipitators, please refer to the CARB manual Electrostatic Precipitators, produced by the Compliance Assistance Program.

Electrostatic Precipitators

A precipitator to remove particulates would normally be located just before the stack. The flue gas enters the precipitator through an inlet gas distribution chamber, the cone or pyramid shaped chamber on the inlet end (note that there is a similar chamber on the outlet end). The purpose of the distribution chamber is to feed all the gases through the precipitator at the same velocity. That is, the gas velocity should be the same in the center, in the corners, and at the sides of the precipitator vessel.

The flue gas then enters the electrically charged collector section of the precipitator. This section is composed of alternating rows of negatively charged wires and positively charged collector plates. The wires provide electrons to give a negative charge to the particles as they pass by. The negative particles are then attracted to and collect on the positively charged collector plates. One row of collector plates usually consists of three or four plates.

Rappers

As the particles accumulate on the collector plates, they form a layer which impedes collection efficiency as the layer thickens. The layer is removed by vibrating the collector plate using a device called a rapper. The rapper is simply an electric hammer which whacks a bar on the top of the plate. The dislodged layer of particles falls into hoppers located in the bottom of the chamber. From the hoppers, the dust is transferred into trucks for disposal.

During the rapping process, some of the dust is reentrained in the gas stream and exits the stack, perhaps producing a puff of smoke. For this reason, the timing of the rapping is critical to the effective operation of the precipitator. A properly designed and operated precipitator should be able to meet both the visible emission limit and the applicable particulate emission limits.

310.4.1 Factors Affecting Collection Efficiency

Several factors can affect the ability of the precipitator to collect particulates. These include the gas velocity and distribution, the voltage between wires and plates, injection of ammonia or urea, rapper timing, the amount of and the properties of the particulates entering the precipitator, and failure of the various precipitator components.

Flow Distribution

As the volume of gas entering the precipitator increases, the **gas velocity** through the precipitator increases and the residence time within the collection chamber decreases. The faster traveling particles are more difficult to stop and collect. Also there is less time in the chamber for the collection process to take place. **Poor gas flow distribution** can also cause high velocities, normally through the center, and low velocities around the edges. The net effect of poor flow distribution is a reduction in particulate collection efficiency.

Voltage

The optimal **voltage** is also critical to collection efficiency. The charged area surrounding the negative wires is called the corona and the transfer of electrons through the corona to the particle is known as **corona discharge**. As voltage increases, corona discharge increases until arcing from the wire to the plate becomes excessive and effectively bypasses the particles. The efficiency improves as the voltage increases, up to the point that electrical arcing becomes excessive. A low but definite arc rate (usually called the **spark rate**) is associated with maximum effective corona discharge. A spark counter is sometimes used to measure the spark rate and the voltage can be automatically adjusted to maintain the desired spark rate.

Ammonia

The injection of **ammonia** or urea into the flue gas, upstream of the precipitator, has been found to improve particulate collection in some cases. It is thought that the ammonia increases the ability of a particle to accept and hold an electrical charge. This improves corona discharge and particle collection.

Obviously, as the load of particulates entering the precipitator increases, the amount which will pass through uncollected will usually also increase. Causes of an increase in **particulate loading** include incomplete combustion, fuel impurities, and high boiler firing rates. Equally important are the electrical properties of the particulates, in particular the particle resistivity. Particle resistivity is dependent on many factors such as chemical makeup, size, moisture, and presence of ammonia.

Several precipitator components are prone to failure. The electrode wires can become loose and short out sections of the collectors. Rappers can fail or be poorly adjusted and reduce the collection efficiency of the affected collector plates. And high voltage supply failure can incapacitate the precipitator. The failure of any of these components may result in increased particulate emissions and increased opacity of the effluent gas.

310.5 LOADING AND TRANSPORTING ASH

Ash

Particulates collected by the precipitator or baghouse are stored in hoppers until they can be emptied into trucks or railcars and hauled offsite, often as a hazardous waste. This transfer operation can be prone to causing dust emissions and most facilities have procedures and equipment to minimize dust. These fugitive dust emissions are subject to the same visible emissions limits (usually 20% opacity) as other sources.

310.6 SOOT BLOWING

In boilers which burn oil or solid fuels, ash and soot have a tendency to build up on the water-wall tubes and on the convection section tubes. This buildup retards the heat transfer efficiency of the tubes and can waste a considerable amount of fuel. To relieve this buildup, many boilers are equipped with soot blowers.

These soot blowers are steam nozzles mounted at the ends of pipes which are inserted into the furnace. High pressure steam from the nozzles blows the soot from the tubes into the flue gas. At many oil-fired facilities, where soot and ash production is low, this soot simply blows out of the stack and is visible as a puff of smoke. Soot blowing is a necessary operation and, because the duration is usually limited to a few minutes, many district regulations make a special exemption to the visible emissions prohibition for a few minutes each day to allow soot blowing. This exemption would not apply to situations of public nuisance, for example where soot falls on a neighbor's property.

311 CARBON MONOXIDE (CO) CONTROL

Carbon monoxide (CO) and organic compounds can also be produced. Improper operating conditions, including poor air/fuel mixing, insufficient air, etc., may cause large amounts of smoke, carbon monoxide (CO), and organic compound emissions. The most significant factors affecting these emissions are burner design, burner adjustment, and flue gas venting. Improper design, block-

ing and clogging of the flue vent, and insufficient combustion air can result in improper combustion and the emissions of aldehydes, CO, hydrocarbons, and other organics.

CO Control

The rates of CO and trace organic emissions from boilers and furnaces depend on the efficiency of combustion. These emissions are minimized by combustion practices that promote high combustion temperatures, long residence times at those temperatures, and turbulent mixing of fuel and combustion air. In some cases, the addition of NOx control systems such as FGR and low NOx burners reduces combustion efficiency (due to lower combustion temperatures), resulting in higher CO and organic emissions relative to uncontrolled boilers.

In the effort to minimize NOx production in the burner flame, the amount of excess air is often minimized. As a result, incomplete combustion may occur and the level of CO may increase to unacceptable levels. Although this is not common, some heater configurations may require a catalyst bed specifically to oxidize CO to CO_2.

Most of California's air districts have regulations which limit CO concentrations in the flue gas to 400 ppm. This is a reasonable level which balances low excess air operation for NOx control with the need to have near complete combustion. It is a level which is achievable in most boilers during efficient operation.

New rapid mixing ultra-low-NOx burners used for natural gas have been reported to produce very low CO levels as well. This can be very beneficial to the boiler operator, especially in areas where emissions banking systems are in place, such as RECLAIM in the Los Angeles area.

Maintenance of the burner system is important to assure proper fuel atomization which minimizes any unburned combustibles. Periodic tuning is important in small units for maximum operating efficiency and emission control, particularly of smoke and CO.

312 ESTIMATING EMISSIONS

It is often useful for the inspector to be able to calculate emissions from the stack for comparison with permit limits and/or with other similar boilers. NOx and CO are best estimated using concentration data from a continuous emission monitor (CEM). The concentration of the pollutant in the stack gas, the amount of fuel burned, and the quality of the fuel burned are needed to estimate the total NOx and CO produced, in pounds per hour or in tons per year.

An excellent emission calculation paper, with examples, is available from the Santa Barbara County Air Pollution Control District. It is in Section 1.6 of their Permit Guideline Document for Boilers, Process Heaters, and Steam Generators. For your reference, this document is included here in Appendix H and is available on the SBCAPCD world wide web site, currently at http://www.silcom.com/~apcd/eng/tech/em_fac.htm. Other useful boiler information can also be found at this site.

SOx emissions are best calculated using the amount of sulfur in the fuel and the amount of fuel burned. Using a mass balance, the amount of SOx emissions are estimated to be the same as the total sulfur burned with the fuel. This subject is also covered well in the afore mentioned Permit Guideline for Boilers. In addition, SBCAPCD has shared two calculation sheets for SOx. Gaseous Fuel SOx Emission Factors and Liquid Fuel SOx Emission Factors are also included here in Appendix I.

400 CONTINUOUS EMISSION MONITORS

Low-NOx burners, flue gas recirculation, selective catalytic and noncatalytic NOx reduction, low sulfur fuels, scrubbers, precipitators, and various combustion modifications are all in use on California boilers to meet emission reduction requirements. This equipment is generally very expensive to purchase and to install and must be regularly maintained to operate properly. After the equipment is installed and operating, how does an owner or an air quality inspector know if the equipment is actually meeting its emission standards? The answer is likely to be the use of continuous emission monitoring (CEM) systems.

This section gives an overview of some of the CEMs in use for boiler emissions. For a more complete discussion of these instruments and the laws which regulate them, please refer to the our technical manual Continuous Emission Monitors, produced by the California Air Resources Board.

401 TYPES OF CEMS

There are two basic types of continuous emission monitoring systems:

- in-situ CEMs - those which test the gas within the stack or duct work
- extractive CEMs - those which extract a portion of the flue gas from the stack into an instrument for analysis.

401.1 IN-SITU MONITORS

The term in-situ refers to the fact that gases are monitored as they normally flow through the stack, without removal of the gases from the stack and without any gas conditioning. In-situ systems use a sensor that is mounted either within the flow of the gases or adjacent to the flow. Typically an in-situ system uses electro-optical or acoustical methods, where light or sound is transmitted through the flue gas. The effects of the flue gas on the transmission are used to determine the characteristics of the flue gas.

In-Stack Sensor

There are two variations of the in-situ analyzers, the in-stack and the cross stack varieties. The **in-stack** sensor samples a specific point in the stack. This sensor must be rugged and able to tolerate high particulate loading and high temperatures. The oxygen concentration is often monitored using in-stack sensors. These may also be called "point" in-situ monitors.

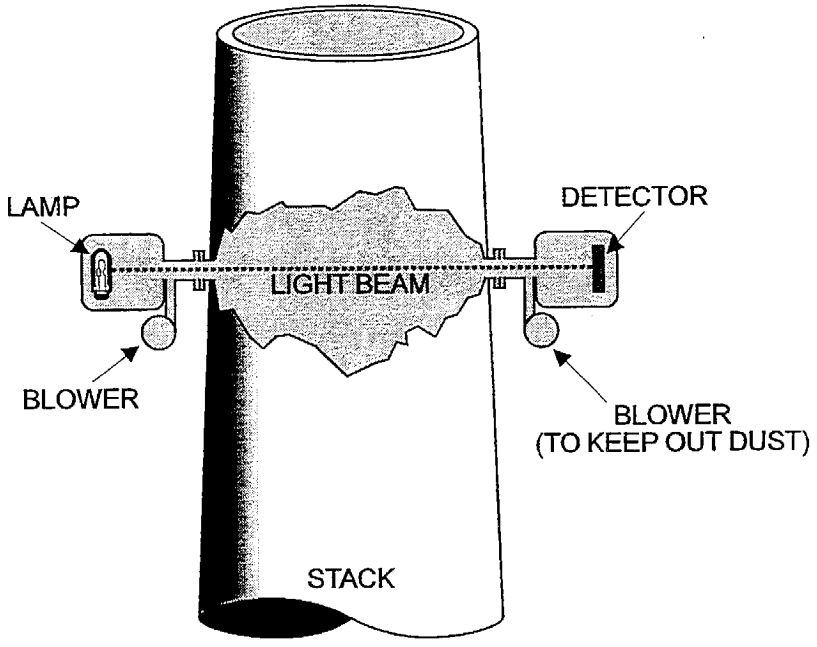

Figure 401.1
In-Situ Analyzer

Cross-Stack Monitors

Cross-stack (or path) monitors measure the concentration along a path through all or some of the stack diameter. This is illustrated in Figure 401.1. These systems use a light source to send a beam across the stack and a receiver-analyzer which measures how much of the beam has been absorbed or deflected. In a single-pass configuration, the light signal is sent across the flue gas path directly to the receiver-analyzer. In a double-pass configuration, the light source and the receiver are located next to one another and the light beam travels through the flue gas to a reflector, which sends the light back to the receiver. The double pass configuration is much more common because it can be calibrated more easily. In fact, most single pass monitors cannot meet EPA calibration requirements. Both configurations can be used to measure gas concentrations and opacity.

In-situ monitors typically have a **quick response time**, meaning that a change in flue gas quality is rapidly reflected at the monitor readout. This can be a significant advantage when trying to reduce emissions by tuning up the boiler

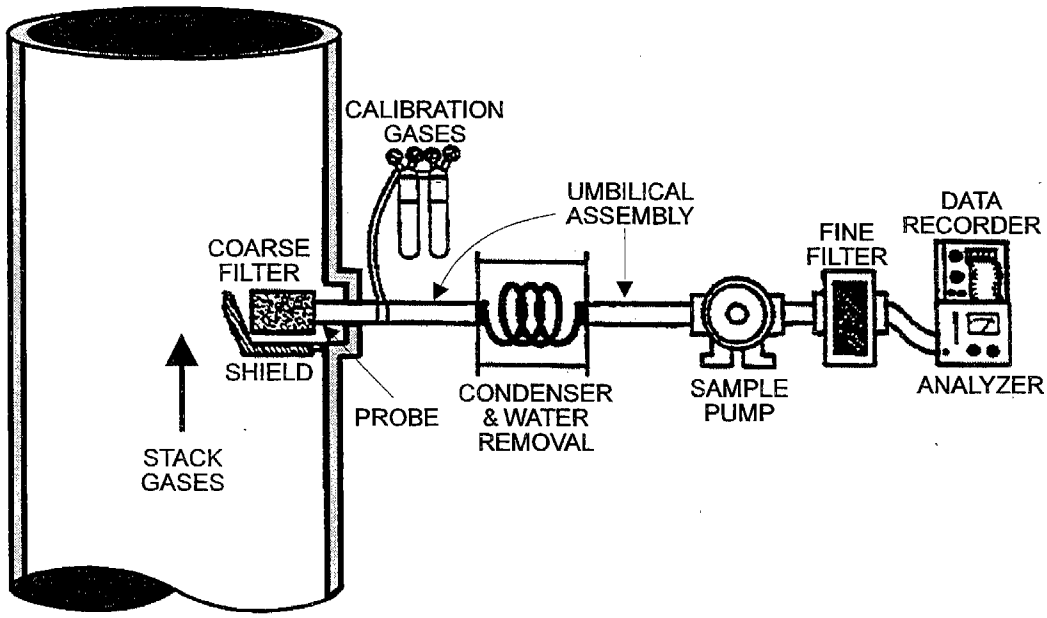

Figure 401.2
Basic Extractive Sampling System

controls. In-situ monitors also tend to be less complex than extractive systems. One disadvantage is that the equipment is located on the stack and maintenance access can be difficult.

401.2 EXTRACTIVE MONITORS

Sample Extraction Monitors

Extractive monitoring systems are more common than the in-situ type. These systems **withdraw a sample** of the gas stream and then condition it. Most condition the sample by cooling it and by removing moisture and particulate. The conditioned sample is then introduced to an analyzer located in a convenient location in the plant. The extractive monitoring system is illustrated in Figure 401.2.

A disadvantage of the extractive sampling system is the **slow response time**. There can be a lag of 5 to 10 minutes (15 minutes maximum) from the time the flue gas enters the sample point, travels through the tubing and the conditioning

system, flows into the analyzer, and produces a signal indicating the concentration of the pollutant. Tuning up a boiler with such a monitoring system can be very time consuming.

In the conventional extractive system, the **sample line must be kept hot** to avoid condensation in the line. It must be kept hot from the sample point to the conditioning system. This is normally accomplished by using an insulated sample line with electrical or steam tracing to provide heat. Condensation in the sample line can result in deposits and line plugging, corrosion, and inaccurate analyzer readings. It can also affect the vacuum pump which draws the sample.

Sample Dilution

Dilution type extractive systems use a **carrier/dilution gas** which is mixed with the sample. The dilution gas is normally clean dry air. Dilution gas is introduced at the extraction probe, mixed with sample gas, and the diluted sample goes to the analyzer. The sample of flue gas is typically diluted by 100:1 but the dilution may range from 12:1 to 700:1. This reduces the problems associated with wet, and corrosive flue gases and moisture removal is not necessary to protect the analyzer. A dilution sampling system is shown in Figure 401.3 and a probe used to dilute the sample is shown in Figure 401.4.

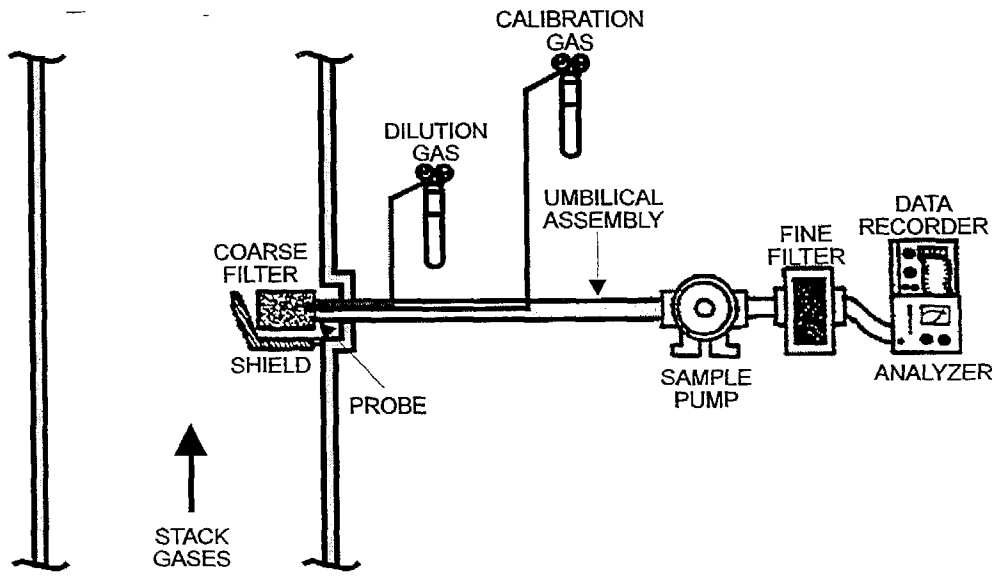

Figure 401.3
Sample Dilution System

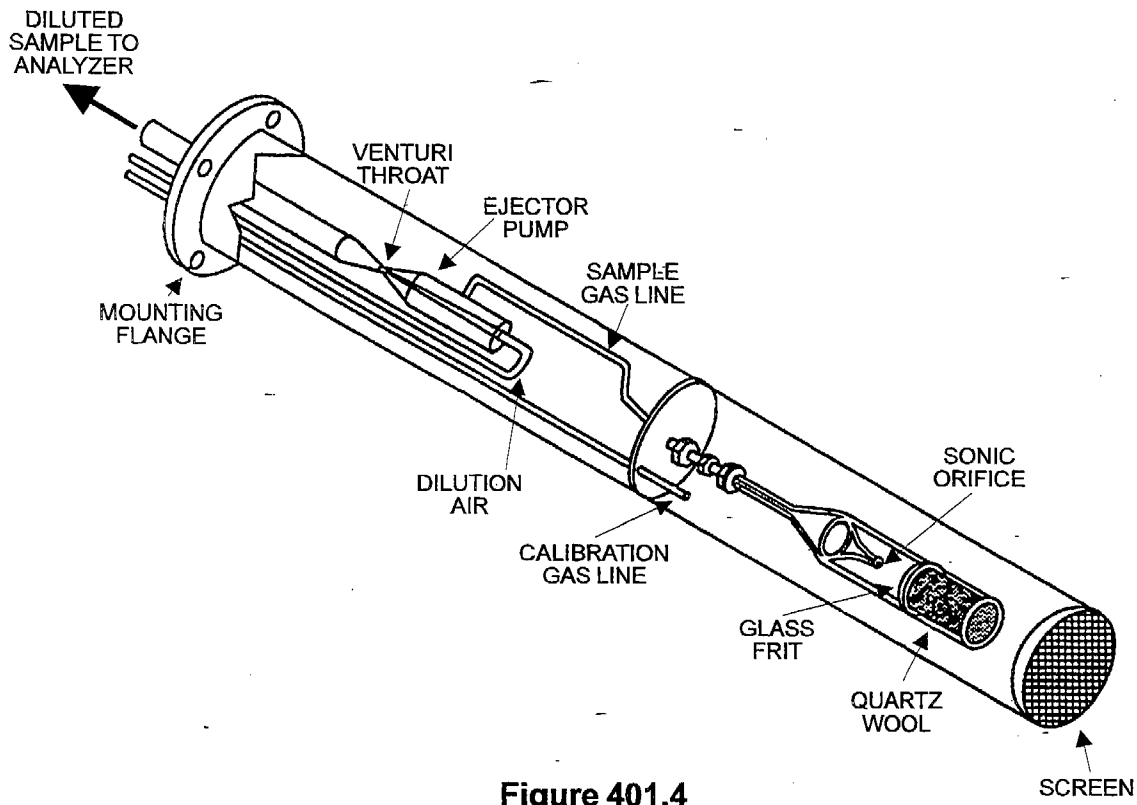

Figure 401.4
Dilution Type Sample Probe

Sample Dilution

Dilution requires the accurate metering of air so that the diluted sample concentrations measured can be corrected to the actual stack concentrations. While dilution ratios of 100:1 are common, higher dilutions are sometimes used when the flue gas streams have a high pollutant concentration and/or are very moist. An important advantage of dilution systems is that they measure concentrations on a wet basis (i.e. no moisture is removed) and the sample better represents the condition in the stack. Federal Acid Rain Program regulations regarding CEMs (40CFR 75) require that concentrations be reported on a wet basis.

Close-Coupled Monitors

In some extractive monitoring systems, the conditioning system and the analyzer are installed directly on the stack, adjacent to the sample point. This is called a **close-coupled** extractive system and has the advantage of reducing the lag time (allowing the instruments to respond to a change in the flue gas quickly).

This type of instrument is often small and suitable to installation in a remote location. Close coupled systems are often used in industrial facilities where a fast response time is necessary but gas stream conditions prohibit the use of an in-situ system. The remote location can make maintenance access difficult.

402 CEM COMPONENT EQUIPMENT

Five components typically make up a continuous emission monitoring system. These are shown in Figure 401.2 and include the:

- probe,
- sample transport line,
- conditioning system,
- analyzer and/or detector, and
- data recorder.

Although not every CEM will have every component, some elements are present in all systems.

402.1 PROBE

Sample Probe

The probe is **inserted into the stack** and the flue gas sample is drawn through the probe to the rest of the monitoring system. The probe must be located to provide a representative sample and must be resistant to moisture, high temperatures, corrosion, vibration, and the buildup of particulates. The probe is a critical part of an extractive or a point in-situ monitoring system but is generally not required in a path in-situ system.

The probe should also be **capable of accepting calibration gases**. Ideally, the calibration gases should be introduced at the probe and travel through the filters, transport line, conditioning system, and analyzer just as a regular sample would. This method will help detect problems in all of the monitoring system's components, including the probe.

A coarse filter is attached to the probe to prevent particles from plugging the system. The coarse filter itself is also susceptible to plugging and so most CEMs include an automatic blowback cycle. During blowback, compressed air is pushed backwards through the filter and into the stack, blowing dust from the filter. A blowback cycle will normally occur every 15-60 minutes.

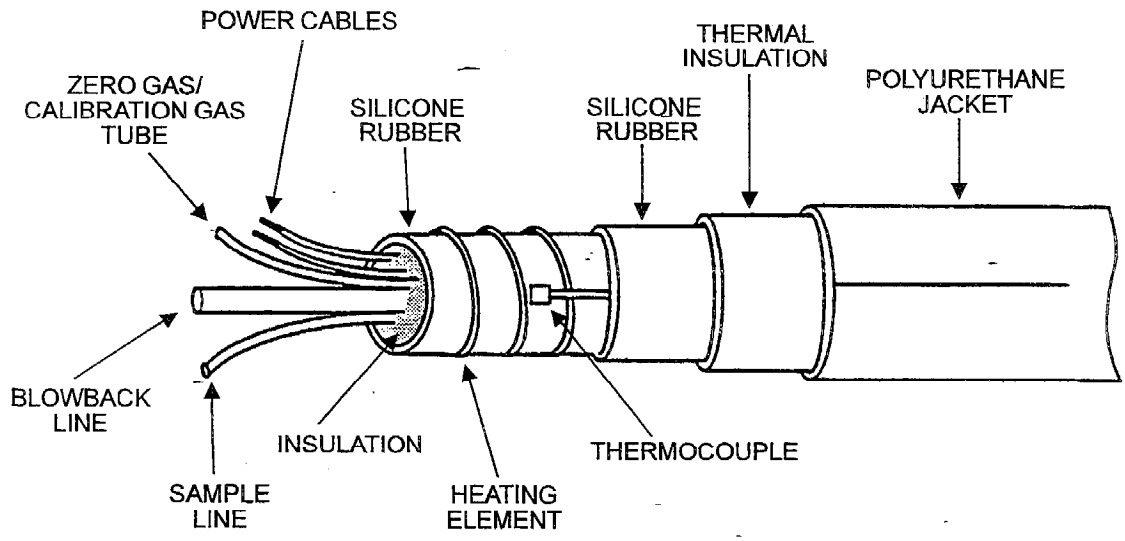

Figure 402.1
Umbilical Sample Line

402.2 SAMPLE LINE

The sample line transports a sample of the flue gas from the probe, through the conditioning system, to the analyzer. Consequently, only extractive CEMs will have a sample line or conditioning system. The sample line is normally heated by electrical resistance elements or by steam trace tubing. This prevents condensation of water vapor and acid gases which could corrode pumps, tubing, and fittings. Condensation of the gas sample might also result in inaccurate measurement of the gas concentration.

Umbilical Sample Line

Sample lines are often incorporated into an **umbilical line** which serves the probe. The components of an umbilical cord are shown in Figure 402.1. The umbilical cord may be designed to perform several functions. The umbilical normally contains a sample line, an electrical heating element for the sample line, and insulation to surround the line and prevent heat loss. It may also contain separate tubes to deliver calibration gas and/or dilution gas to the probe and perhaps electrical wiring if equipment at the probe requires power or an electric

signal. Typically, a maximum of about 250 feet in length is recommended for umbilical cords and the cords should be sloped at more than 5° to prevent liquid blockage.

In extractive systems using the dilution technique, heating of the sample line may not be necessary. The sample line must also be resistant to chemicals and corrosion for proper performance over a normal service life.

Sample Line

For extractive systems, the sample line often causes a majority of a monitor's problems and is often reasonably accessible for inspection. The sample line should be heated and have no sign of damage. A flow indicator, such as a bubbler or rotameter, is usually installed after the analyzer to verify sample flow.

A certified calibration gas should be piped to the system (preferably to the probe) and should also show a flow during calibration. The calibration gas should be introduced at the probe so that it will experience the entire sampling system before reaching the analyzer. Because many problems can occur in the sample system, it is not acceptable to introduce the calibration gas into the back of the analyzer. The calibration result must agree with the concentration posted on the calibration gas bottle.

402.3 CONDITIONING SYSTEM

The conditioning system is included to protect the analyzer from plugging, corrosion, or from materials which might affect accuracy of the analysis. The conditioning system normally provides a clean, dry sample to the analyzers. Samples which are diluted at the probe, however, may not require moisture removal.

Sample Filter

Before entering the sample conditioner, the sample normally passes through a **primary filter** which removes any coarse particulate. This is followed by a secondary filter which removes all of the remaining particulate larger than about one micrometer in diameter. These filters are normally replaced on a regular maintenance schedule, or more frequently if plugging is a problem.

Because most extractive analyzers require a dry sample, measurement of some pollutant concentrations on a dry basis has become a standard. And many regulations have been written which require that the pollutant concentration be

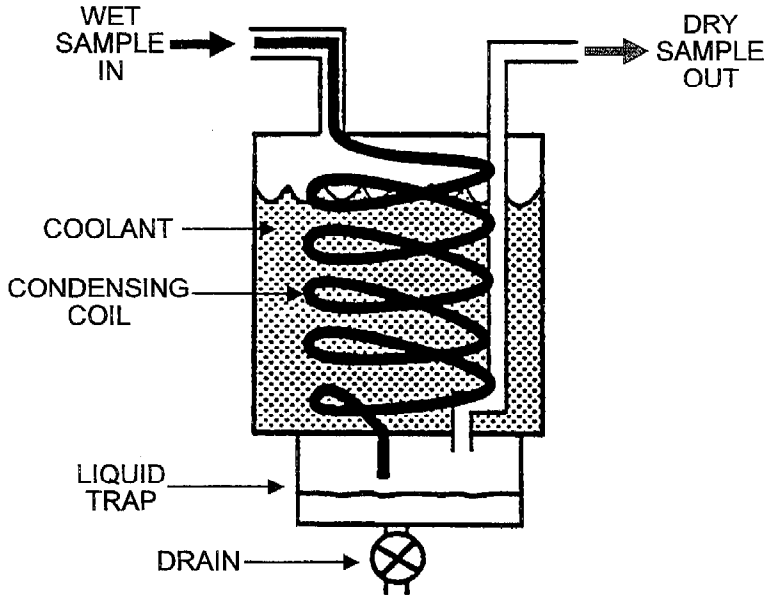

Figure 402.2
Refrigerated Condenser

reported on a **dry basis**. Bear in mind that a stack gas can be almost 20% water vapor and a stack gas concentration reported on a dry basis might be 20% higher than the same concentration reported on a wet basis. A new trend has been established with the new federal Acid Rain Program CEM requirements in 40CFR Parts 75 and 76. These regulations require that pollutant concentrations be reported on a wet basis, to better represent the conditions in the stack effluent.

Sample Drying

The **removal of moisture** is typically accomplished by condensation, permeation, or by dilution. The moisture is condensed by rapidly cooling the sample and trapping the condensed water in a collector. A compressor-type refrigeration unit is the most common cooling method, although a thermoelectric plate cooler or a vortex chiller may also be used. A refrigeration-type condenser is shown in Figure 402.2.

Permeation dryers may also be used in place of condensers. The operation of permeation dryers is based on the selective permeability of water through a membrane.

Sample Conditioning

In most cases, dilution of the sample with air can reduce the moisture concentration to a level below the ambient temperature dew point that is acceptable to the analyzers being used. The dilution may take place in the stack at the probe, in the sample line, or immediately prior to the analyzer.

402.4 ANALYZER

The analyzer must accurately measure the concentration of the target gas as it occurs in the stack. This is accomplished using a detector, a convertor and a readout. The concentration of the target gas is first recognized by the detector, the detector response is then converted to an electrical signal, and this signal is sent to a readout instrument to indicate a concentration value. The different types of analyzers will be discussed in more detail shortly.

402.5 DATA RECORDER

Typically, the data recorder is separate from the analyzer. It receives the signals from multiple analyzers and instruments and produces an output record. Recorders include the simple chart recorder where a pen draws the output signal, to more sophisticated computer systems. The computer data recorders normally have special functions to provide hourly, daily, or monthly averages, as well as data trends. They may also give feedback to the combustion control system.

403 CEMS FOR BOILERS

Continuous emission monitors are used on boiler systems to measure NOx, SOx, opacity, excess oxygen, carbon monoxide, carbon dioxide, flue gas flow rate, and more. The monitors are normally installed in response to district, state and federal regulations and permits which require them. They may also be installed to improve efficiency and reduce fuel use, or to verify that pollution control equipment is performing to specification.

404 ANALYZERS AND MEASUREMENT METHODS

Measuring techniques are based on the physical and chemical properties of the target gases. In some cases the test method is a standard which is required by regulation. The four primary techniques are light absorption, luminescence, electrochemical, and paramagnetism.

404.1 SPECTROSCOPIC ABSORPTION

Light Spectrum Absorption

Spectroscopic absorption is a common method of measuring individual gas concentrations and can be used for SO_2, NO, NO_2, HCl, CO, and CO_2. The unique pattern of absorption of light (electromagnetic radiation) by each gas type gives a fingerprint used to identify the gas. Each type of gas molecule is known to absorb unique combinations of wavelengths of light. By measuring the intensity of light at these wavelengths after the light has passed through the flue gas, the concentration of a specific pollutant or gas can be determined. A spectroscopic absorption analyzer is shown in Figure 404.1.

The five basic components of a spectroscopic absorption instrument are:

- light source,
- wavelength selector or filter,
- sample chamber
- detector / transducer (detects light energy and gives electric signal)
- readout / data recorder

With the exception of the readout, these components are often hidden in a box and not visible to the air quality inspector.

404.2 LUMINESCENCE

Luminescence is a key measurement technique. It is the most common method of analyzing for NOx and is also used for SOx. Although the chemistry of luminescence is somewhat different from spectroscopic detection methods, the components of the systems are similar. Each has a detector which measures light energy at specific wavelengths. In luminescence, however, the detector measures light energy given off by the target gas molecule, as opposed to light from a bulb which passed through the gas unabsorbed. By its nature, it is an extractive method, requiring a sample line and sample cell.

We are all familiar with dayglow or phosphorescent paints. When you turn off the lights, they glow, usually with a distinct yellow light that is readily recognizable. As we would recognize phosphorous by its yellow glow, a gas detector recognizes the target gas by the color (actually the wavelength) of the light energy it gives off.

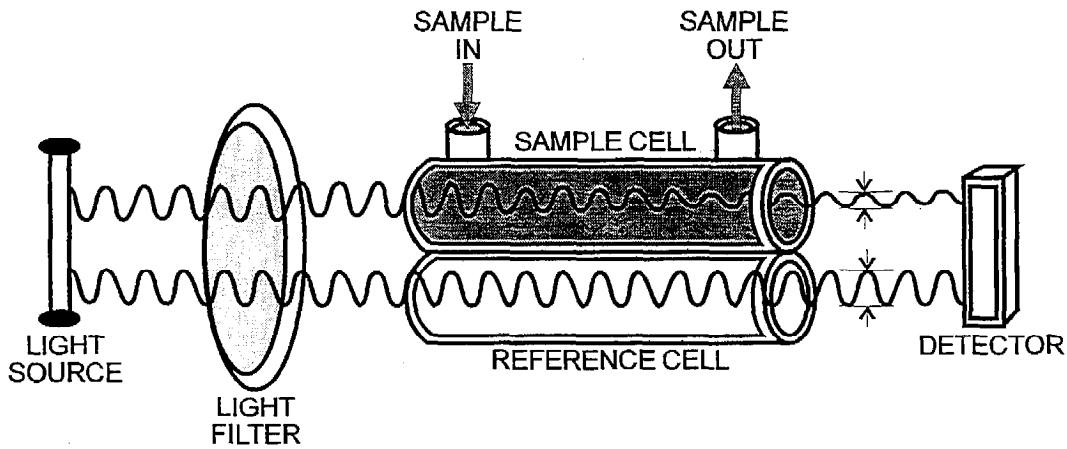

Figure 404.1
Spectroscopic Analyzer

A molecule at room temperature has a typical equilibrium energy level. If the molecule absorbs energy (becomes excited), either by absorbing light or by a chemical reaction, it will then give off energy. This energy will be in specific wavelengths (colors) of light. This is the principle behind **UV fluorescence,** which is often used to measure SOx.

UV Fluorescence for SOx

When testing for sulfur dioxide (SO_2), ultraviolet light is beamed through the flue gas sample exciting the SO_2 molecules. The excited SO_2 then emits a specific wavelength of light energy as it returns to its normal state. The detector "sees" this light, measures the intensity, and determines the SO_2 concentration in the flue gas. This is the UV fluorescence method. A UV fluorescence analyzer for SOx is shown in Figure 404.2.

A chemical reaction can also cause luminescence. For example, when methane combines with oxygen, it gives off a typical blue light or flame. This is an example of **chemiluminescence,** which is often used to measure NOx.

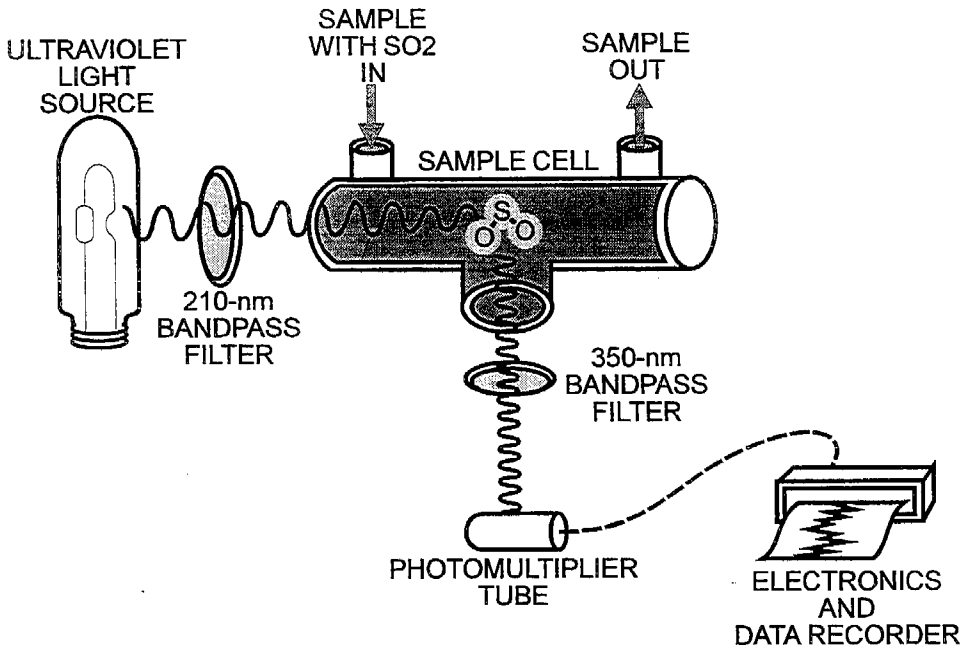

Figure 404.2
SO_2 Fluorescence Analyzer

Chemiluminescence for NOx

When testing for nitrogen oxides (NOx), any NO_2 in the flue gas sample is first converted to NO by a heated catalyst. Ozone (O_3) is then added to the sample and it reacts with the NO to form NO_2. The newly formed and excited NO_2 then emits a specific wavelength of light energy as it returns to its normal state. The detector sees this light and determines the NO concentration in the flue gas. This chemiluminescence method is very sensitive and specific to NOx, even in a gas mixture. It is illustrated in Figure 404.3.

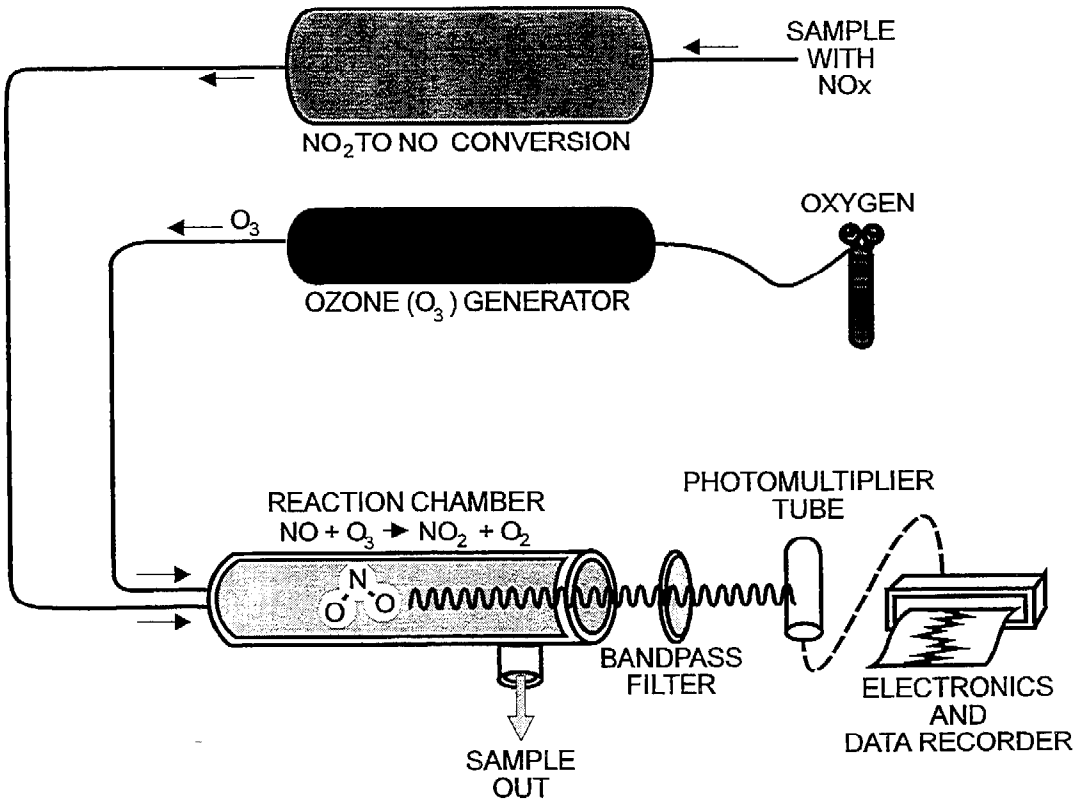

Figure 404.3
NOx Chemiluminescence Analyzer

404.3 ELECTROCHEMICAL ANALYSIS

Two principal electrochemical techniques have been developed for the measurement of gases in exhaust streams: electrocatalysis and polarography. Both of these techniques send a sample of gas through an electrochemical cell and measure the currents or voltages produced.

Electrocatalysis, which uses a solid electrolyte instead of a liquid electrolyte, is often used in-situ to measure **oxygen** concentrations. In electrocatalysis, a thin film on the surface of the solid usually catalyzes a reaction with the target gas, allowing the gas molecules to migrate through the solid and generate a current.

Electrocatalysis for Oxygen

A typical analyzer (Figure 404.4) uses a zirconium oxide (ZrO_2) disk which has been coated with a thin film of platinum. A reference gas, usually air, is maintained on one side of the disk while the sample gas flows on the other side. The rate of migration of oxygen ions from the air through the disc is proportional to the concentration difference between the sample gas and the reference gas. The ZrO_2 analyzer can withstand temperatures to nearly 1600 ^oF. It is commonly used as the oxygen sensor in the exhaust systems of newer automobiles to measure O_2 and adjust the fuel/air mixture.

Polarography

Polarography uses a thin film membrane through which only the target gas can diffuse. The rate of diffusion is proportional to the gas concentration. The target gas then reacts with an electrolyte solution causing current flow in an electrochemical cell. Polarographic analyzers have been developed to measure O_2, SO_2, NO, NO_2, CO, and CO_2, by using various types of electrodes, electrolytes, and membranes. Polarography is an extractive method requiring a clean and dry sample.

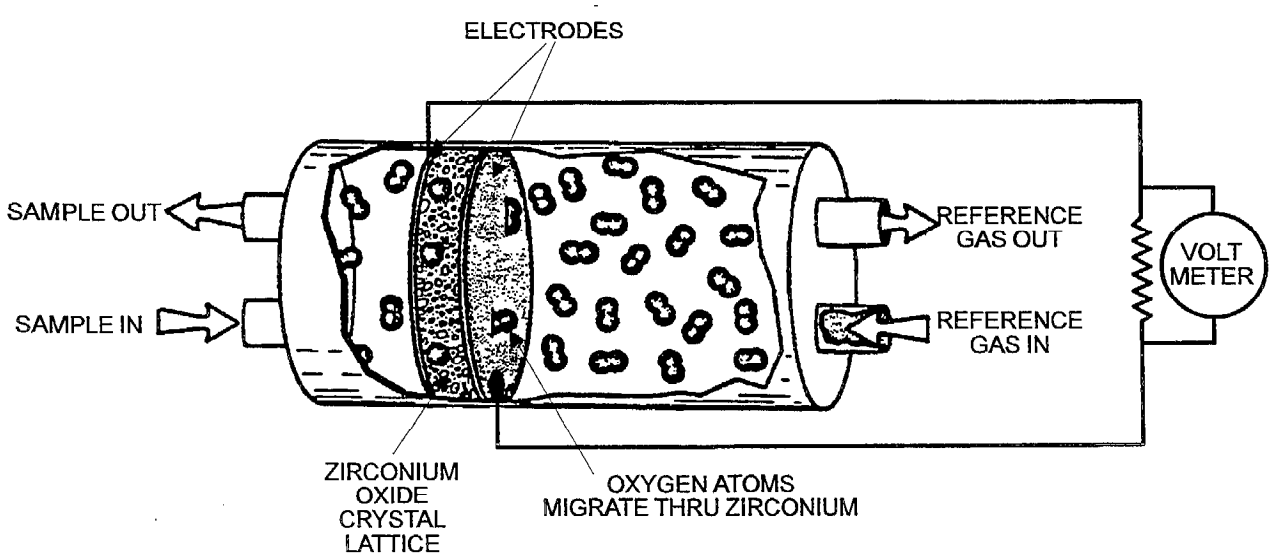

Figure 404.4
Electrocatalytic Oxygen Analyzer

404.4 PARAMAGNETISM

Oxygen is attracted by and interacts with a magnetic field; that is to say it has paramagnetic behavior. One extractive method uses this property, the magnetodynamic technique. The sample gas flows through a magnetic field which contains a torsion pendulum. The oxygen affects the field and causes the pendulum to turn in a way that is related to oxygen concentration. Paramagnetism can also be used to measure other diatomic molecules such as N_2.

404.5 OPACITY MONITORS

Smoke and particulate concentrations are often measured in terms of opacity. Heavy or thick smoke will have a high opacity, near 100 %, and a very faint smoke will have a low opacity, perhaps near 10 %. Opacity is defined as the amount that a visible light beam is reduced as it passes through stack gases. The smoke particles tend to scatter or absorb light, preventing detection by your eyes or by an instrument detector.

Smoke Reading

Opacity from a source can be determined by visual observation. An individual, certified for reading smoke, can observe the flue gas plume leaving the stack and record the opacity. Legally binding visual opacity readings are allowed if made by certified smoke readers. Visual opacity observations are limited in precision and are somewhat subjective due to atmospheric conditions.

Opacity monitors are the simplest of the in-situ analyzers. They include a light source and a light detector, with some related optical and electrical equipment. The light source sends a beam across the stack and the detector measures the intensity of the light it receives. The percent of light lost (attenuated) as it passes through the stack is the opacity. A single-pass opacity monitor is shown in Figure 404.5.

In practice, most opacity monitors are double pass type. The light passes through the stack to a mirror and then passes back through the stack to the light detector. This configuration can be more easily calibrated using a filter and mirror. Consequently, it is much easier for the double pass instrument to achieve USEPA certification.

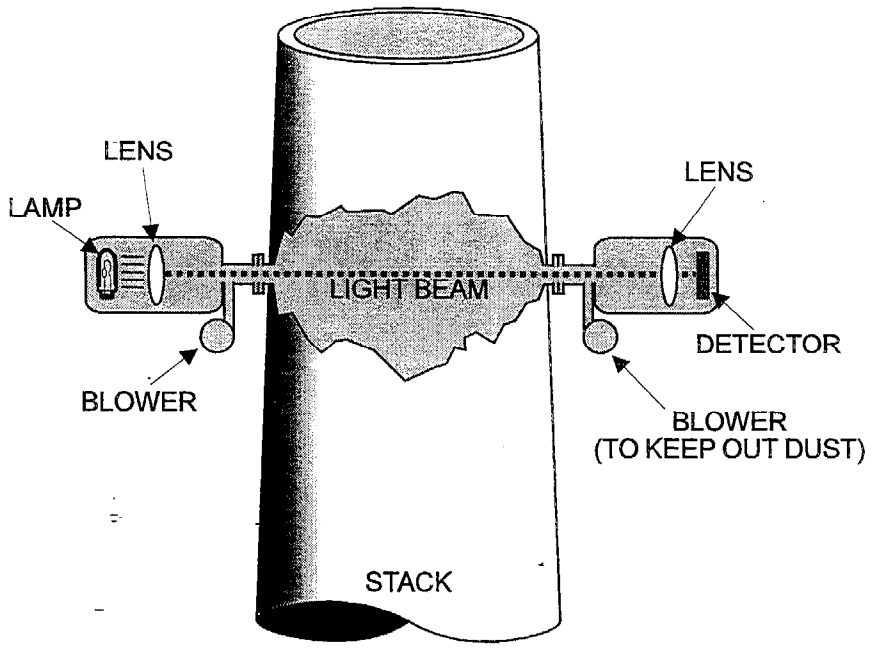

Figure 404.5
Opacity Analyzer

404.6 FLOW MONITORS

Emission standards are often expressed in terms of mass emission rates such as pounds per million Btu (lbs/MMBtu). This implies that flow monitors are required as part of the CEM system. Several techniques are available for measuring flue gas flow rates, including: differential pressure sensing, thermal sensing, and acoustic velocimetry.

404.6.1 Differential Pressure Type Flow Meters

Pitot Tubes

A **pitot tube** (Figure 404.6) consists of two tubes, one facing into the flue gas flow and one facing away from or perpendicular to the flue gas flow. The pressure differential between the impact or stagnation pressure (facing the flow) and the static pressure (away from the flow) is related to the flue gas velocity. The velocity, temperature, and stack dimensions can then be used to determine the flow rate. One simple pitot tube is the type-S, specified in EPA Reference Method 2.

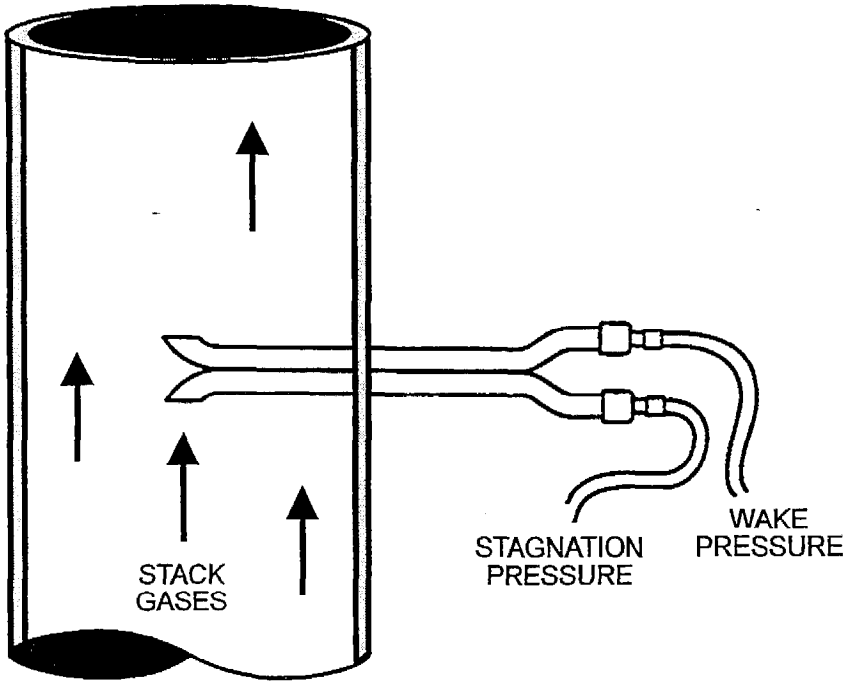

Figure 404.6
Type-S Pitot Tube

A pitot tube is used to measure gas velocity at only one point in the stack or duct. Several tubes must be used to estimate the flow distribution across the stack. A thermocouple is usually attached to the pitot tube to monitor stack gas temperature which is necessary to determine gas density and mass flow.

Annubars

The **annubar** is a modified form of pitot tube that has multiple ports in a pipe which runs across the stack. The ports give an average stagnation pressure across the diameter of the stack. In a similar manner, a separate set of ports facing away from the flow give an average static pressure. The difference between these average pressures is then used to estimate average flue gas velocity across the stack. An annubar is shown in Figure 404.7.

Flow meters based on differential pressure measurement are typically more accurate at higher flue gas flow rates. At low flow rates, the pressure differences are very small and difficult to measure. Plugged tubes can also be a problem and

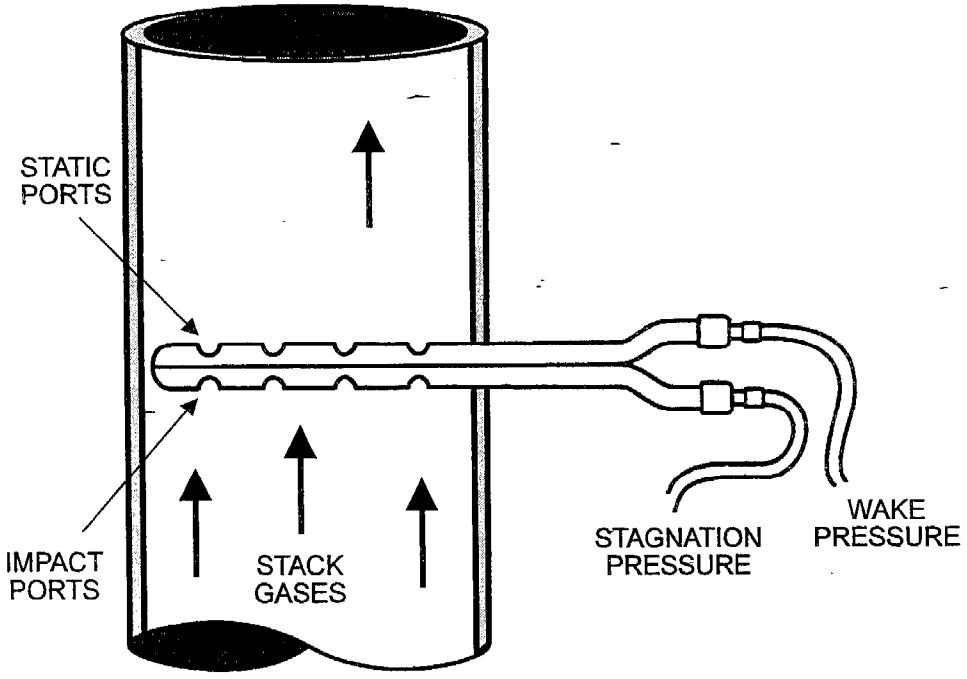

Figure 404.7
Annubar Flow Meter

lead to inaccurate flow rate results, normally too low. Pitot tubes and annubars generally must have a connection for blowing out plugged lines with compressed air. Care must be taken to isolate the sensitive differential pressure meter during line blowing.

404.6.2 Thermal Sensing Flow Meters

Flow Meters

As a gas flows past a heated object, the gas tends to cool the object. The faster the gas flows past the object, the more the object is cooled. This is the basis for thermal sensing flow meters. Two sensors are used: one heated and one unheated. The unheated sensor is used to compensate for changes in the flue gas temperature.

One thermal sensing configuration, the hotwire anemometer, uses two platinum resistance wires wound on ceramic cylinders and enclosed in stainless steel tubes. One of the wires is heated by an electric current, the other is unheated. If a

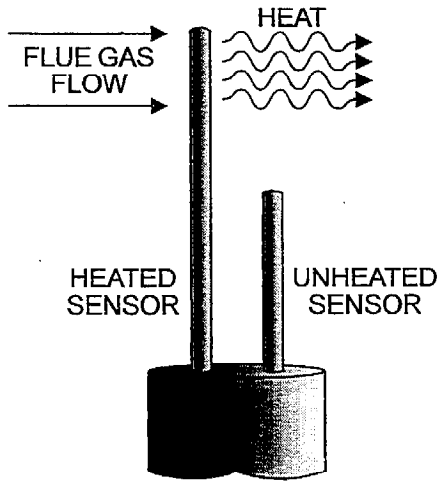

Figure 404.8
Thermal Sensing Flow Meter

constant current flows through the wire, the amount of heat generated can be found, and the final temperature of the wire is dependent on the rate of flow of the flue gas. Multiple sensors can be combined easily in arrays to measure the average flow rate within a stack. A thermal sensing flow meter is illustrated in Figure 404.8.

404.6.3 Acoustic Velocimetry

Flow Meters

This method (Figure 404.9) measures the time it takes sound pulses to travel through the gas flow, first against the direction of flow, then with the flow. The two times are compared and the average gas velocity in the stack can be determined. In this method, ultrasonic pulses in the range of 50 kHz are transmitted both upstream and downstream through the flow. Two transceivers are located opposite each other on the stack at an angle of about 45° with the gas flow. Each transceiver both transmits and receives the ultrasonic pulses. The pulse in the same direction as the flow will reach the opposite transceiver faster than the pulse in the opposite direction. The difference in pulse speed is then related to the average speed of the gas flow.

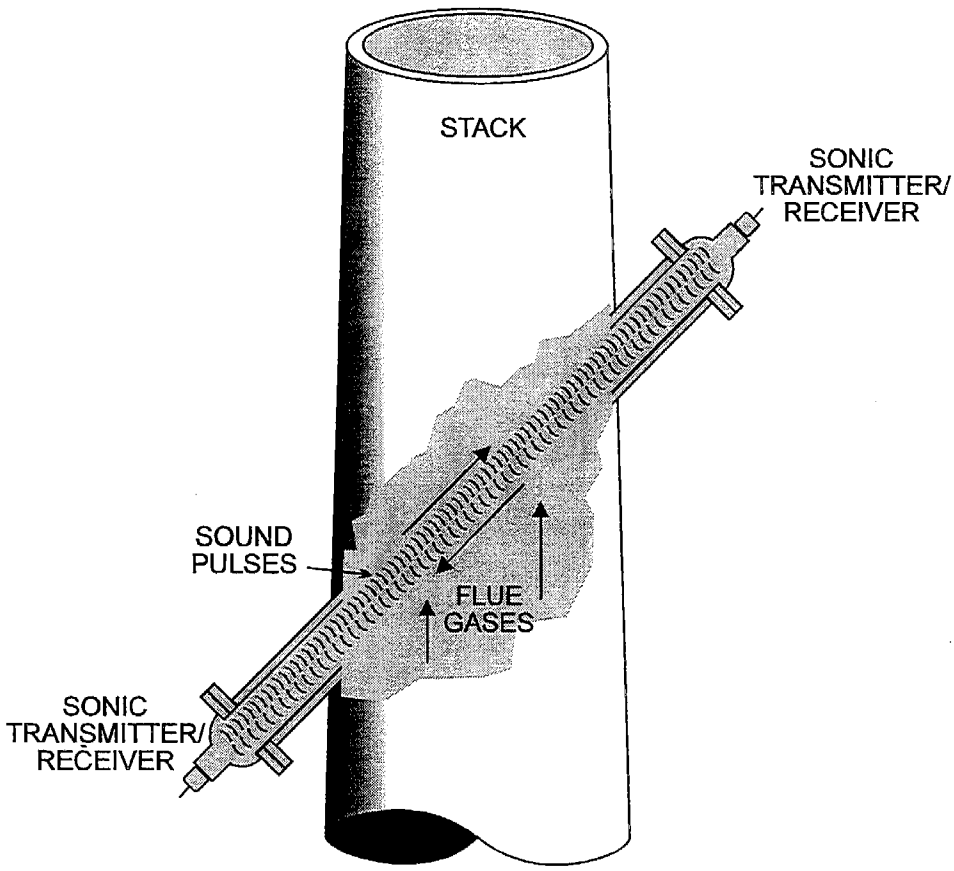

Figure 404.9
Acoustic Gas Velocity Meter

405 OPERATION AND MAINTENANCE OF CEMS

Quality Assurance Plan

CEM owners must have a written **quality assurance plan** to ensure the validity of the instruments. The plan should include procedures for CEM calibration, drift determination, preventative maintenance, data recording and reporting, accuracy audits, and corrective action for malfunctions. The plan will designate who is responsible and will be specific to the types of analyzers in use at the facility.

Daily operation checks are required to confirm that the monitor is functioning properly. The equipment should normally undergo a calibration check and a zero check every 24 hours. Also, a frequent visual inspection of instruments such as pressure gauges, rotameters, and control panel lights is recommended.

405.1 CALIBRATION

In general, a continuous emission monitor must be calibrated daily. For extractive systems, this can usually be accomplished by using zero and span gases. A **zero gas** has a zero concentration of the target gas and is kept in a compressed gas cylinder. During the zeroing step of the calibration, the flue gas sampling is stopped or bypassed. The zero gas is then injected into the sample system at the probe or as close to it as possible. The zero gas passes through the sample line, conditioning system, and the analyzer. The readout should show a zero concentration for this calibration test. Nitrogen or purified air are often selected as the zero gas.

Calibration Gases

A **span gas** is also purchased in a compressed gas cylinder and has a preset concentration of the target gas, normally at 80% of the full scale range of the instrument and near the maximum emission limit for the target gas. The span gas is normally nitrogen to which a small amount of the target gas has been added.

During the span step of the calibration, the flue gas sampling is again stopped or bypassed. The span gas is then injected into the sample system at the probe or as close to it as possible. The span gas passes through the sample line, conditioning system, and the analyzer. The readout should show a concentration very close to that posted on the span gas cylinder.

The difference between the instrument readout and the actual span gas concentration is known as "drift," and often a drift of from 2% to 5% is acceptable. If the drift is too large, the system is considered out-of-control and must be recalibrated. The performance drift specifications are found in 40CFR 60, Appendix B.

Out-of-control conditions for excessive calibration drift are defined in 40CFR 60, Appendix F. Out-of-control conditions occur in either of the following situations:

1. When either the low-level (zero) or high-level calibration check result is greater than two times the performance drift specified for 5 consecutive days.
2. When either the low-level (zero) or high-level calibration check result is greater than four times the performance drift specified for any one day.

For double-pass in-situ systems, the daily calibration procedure can usually be accomplished by using standard **calibrated optical filters** for opacity or internal gas cells for gas monitoring. The filters are inserted into a separate light path and the filtered light is directed into the detector using mirrors. The instrument readout should indicate a concentration that corresponds to the filter or gas cell.

CEM Calibration

Blockage of the gas sampling probe and transport lines can be a serious problem, especially when the flue gas contains particulates. These problems are often indicated by the system vacuum gauges and/or sample flow meters (normally a rotameter as shown in Figure 405.1). Filters used to remove particulates from the sample stream must be cleaned or replaced routinely. Many conditioning systems also include facilities for purging solids from the filter, lines, and probe. Normally this is done by blowing air backwards through the tubing.

Condensers, if present, must be kept at a constant temperature above 32 °F to prevent ice plugging. Condensed liquids may also absorb the target gas or other gas constituents of interest. Chemical reactions may occur, forming scale buildup or corrosion. All system components should be inspected for plugging and corrosion regularly.

405.2 SAMPLE LINE LEAKAGE

Since many of the sample systems operate under a vacuum, air leakage into the sample lines can occur if the connections are not sealed. This will result in sample dilution and produce a meter reading which is lower than the actual concentration in the flue gas.

Vacuum LeaksCEM Calibration

Normally this type of leakage can be discovered during the daily calibration of the instrument using a span gas. However, sometimes the span gas may be supplied at some pressure and a vacuum may not exist in the system during

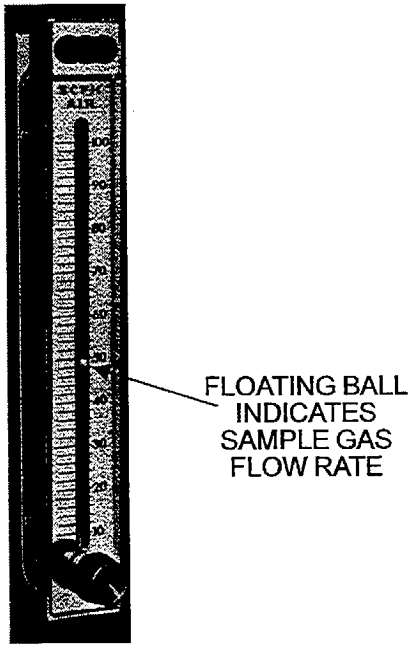

Figure 405.1
Rotameter Type Flow Meter

calibration. This could lead to the vacuum leak going undiscovered. The vacuum gauge should be checked during calibration to be sure that the test reflects normal operating conditions.

Sample Line Leaks

One method of **determining leakage in the sample line** is to plug the end of the sample probe. With the probe plugged, there should be no flow to the analyzers. Any flow would indicate leakage and all line connections will require inspection. This test may require that the system be shut down and/or the probe removed from the stack.

405.3 CLEANING OPTICAL LENSES

The **optical lenses** in some monitors can become dirty and lead to erroneous readings, especially in opacity meters. Normally a fan is used to blow air out through the view port to prevent the entrance of dust or ash, but this may not be completely effective. Routine maintenance of these instruments would include cleaning the optical surfaces and then recalibration. Due to problems with optical alignment, this cleaning should be done by skilled technicians in a clean shop.

406 INSPECTING CEMS

There are two basic ways to inspect a CEM: The **systems audit** is the type that would normally be done by a local air quality inspector. This is not a hands-on audit, but an inspection of operations and management practices. The **performance audit** is more detailed and can only be accomplished by a trained agency inspector, a source testing contractor, or a plant QA inspector.

A CEM systems audit will normally include: 1) a tour of the CEM installation to review the configuration and condition; 2) an evaluation of the operation of the system; and 3) a review of data and records.

406.1 TOUR THE CEM INSTALLATION

- Is the CEM configuration the same as it was when it received initial approval and performance certification?
- Have there been any modifications to the system that might adversely affect its performance?
- Have any major components been replaced? Are the analyzers the same? Check the serial numbers.
- Are the CEM components difficult to access? Would maintenance personnel be willing to inspect the system once a day, once a week, or never? Could repairs be made during bad weather?
- Is there evidence that the site has been visited? Is there grime on the cover locks and hand railings?
- Is the equipment in a weather-tight enclosure or is it exposed to the elements?
- Are the components and/or mounting bolts corroded?
- Is there evidence that the probe has recently been removed for inspection?

CEM Inspection

CEM Inspection

- What is the condition of the plastic or rubber parts such as gaskets, umbilical cord coverings, hoses, electrical cables, etc.?
- If possible, view the probe directly through another port. Is the probe sagging, moving back and forth, or excessively dirty?
- For systems with in-situ gas or opacity monitors, are the filters for the blowers clean? Are the blowers in operation and is there a supply of air to protect the windows from dirt?
- Note any warning or indicator lights which are on.
- Record the readings of any field mounted gauges or meters.

Calibration Gases

- For the calibration gas or audit gas cylinders (See Figure 406.1), record the:
  - cylinder number
  - concentration of the target gas
  - date of certification analysis (should be less than 1 year old usually)
  - regulator pressures (tank pressure and supply pressure)
  - condition of the supply lines, fittings, and regulators
- If possible, observe a calibration cycle and a probe blowback cycle while at the installation site.
- Note the general appearance and housekeeping of the area.

406.1.1 Umbilical Lines and Electrical Cables

Sample Lines

- Is there a minimum slope of 1/2 inch per foot from the probe to the conditioning system, to prevent water buildup and plugging?
- Are there any loops or kinks in the umbilical line?
- Are electrical cables properly routed and protected?

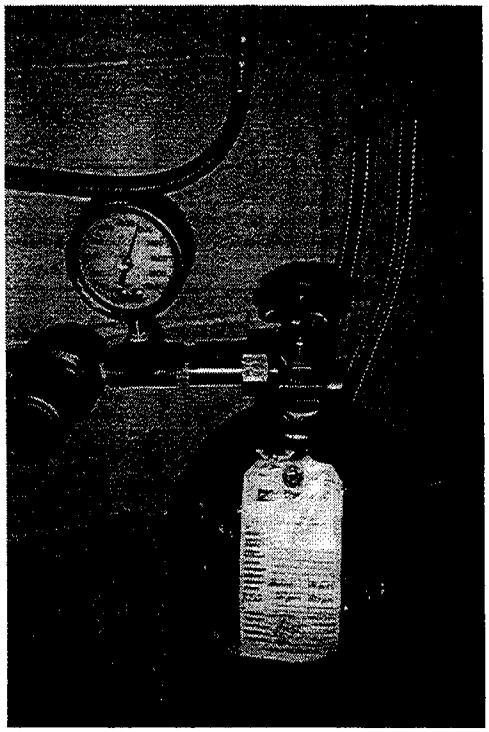

Figure 406.1
Calibration Gas Cylinder

406.1.2 Gas Conditioning System

Sample Conditioning

- What type of drying system is used to remove water from the sample?
- How is water removed from the system? Can you see water in any of the tubes?
- Are the fittings corroded or leaking?
- Is the particulate filter clean? When was it last replaced?
- Are the sample pumps corroded, noisy, or leaking?

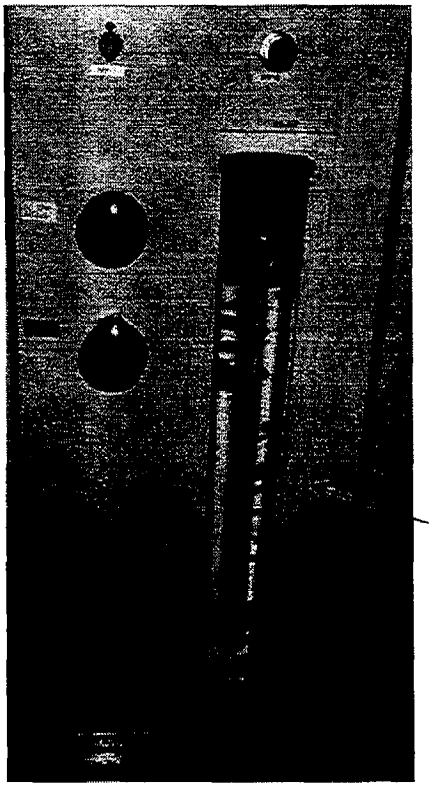

Figure 406.2
Bubbler Type Flow Indicator

Sample Conditioning

- Record the sample gas flow rate and pressure. The flow rate is usually measured and controlled using a rotameter, as shown in Figure 405.1.

Some systems will be equipped with a bubbler to indicate sample gas flow or calibration gas flow. See Figure 406.2. Note which bubblers show that gas flow is occurring. These bubblers should be located on the outlet from the analyzer to prevent absorption of the target gas into the liquid.

406.1.3 Control Panels

Figure 406.3 shows an example control panel.

- Record the status of control panel lights, indicators, and alarms for each analyzer.

- Record the panel meter readings for each analyzer.

Figure 406.3
CEM Control Panel

406.2 OPERATIONAL PROCEDURES

Quality Assurance

- Inspect the quality assurance plan and try to determine if the operator is aware of the contents and is following the procedures.

- Inspect the boiler logbook for CEM activities.

- Who has responsibility for the following?
  - system operation
  - calibration
  - preventative maintenance
  - corrective maintenance
  - auditing
  - reporting

- Ask the operator which system operation has given the most problems since the last audit.

- Ask the operator to perform a system calibration. Note the following:
  - the operator's familiarity with procedures
  - how the operator determines that the system is calibrated correctly
  - how the operator annotates the data

- Obtain copies of the strip chart or computer output for the calibration.

406.3 REVIEW RECORDS AND DATA

Record Review

Depending on the complexity of the CEM system, the review of records and data will normally take several hours or more. Try to find a quiet location for review because some concentration is required. The EPA requires that a source retain records for two years, but a review of 30 days of data and 90 days of maintenance data may be sufficient. If possible, the data should cover a period for which an excess emissions report has been submitted. Items to look for include:

- missing data
- unusually noisy or flat data
- inconsistent trends in readings

- annotations for monitor and source shutdowns
- annotations for excess emissions
- printed fault or warning codes

407 REGULATIONS

There are four main types of regulations which affect CEMs on boilers.

(1) There are rules which require that certain boilers be equipped with continuous monitors. For instance, most large electric utility boilers are now required to monitor emissions continuously.
(2) There are performance specifications which state how accurate the required CEMs must be.
(3) There are quality assurance procedures which must be performed by the owners of the equipment to confirm that the data are accurate and dependable on a day-to-day basis.
(4) There are emissions reporting requirements. Many operators are required to periodically report emission test results to the local air quality management district.

407.1 MONITORING REQUIREMENTS

The USEPA initially published in the October, 1975 Federal Register the requirements for Continuous Emissions Monitoring (CEM) on new sources, and directed the states to adopt monitoring regulations for existing sources. Although USEPA was vague on the use of CEMs for direct compliance determination, CARB has always held that CEMs should be used to enforce continuous compliance.

Rules Requiring CEMs

At present, the rules which require and regulate CEMs are, in general, embodied in local district rules because regulatory responsibility for stationary sources rests primarily with the districts. District rules are usually similar but can have significant differences. The three types of district rules which may require a monitor to be installed and operated are:

1. General CEM or In-stack Monitoring Rule.
2. New Source Performance Standard rules (NSPS).
3. New Source Review rules (NSR).

CEM Regulations

The CEM or in-stack monitoring rules are usually developed by the districts themselves or according to CARB guidelines.

The NSPS and NSR rules are equivalent to the federal NSPS and NSR regulations and are normally adopted by reference. In most cases, these local regulations are similar to those from USEPA but are more restrictive. For example, some districts now require CEMs on boilers as small as 5,000,000 Btu/hr and some districts require that CEMs be added to older boilers.

The USEPA has adopted regulations requiring CEMs on many types of large boilers. Most of these are found in 40CFR 60, the New Source Performance Standards (NSPS). A summary of those regulations which affect boilers is included in Table 502.1 (the next chapter on Legal Requirements) and they are reproduced in the Appendices. Many of California's local districts have been delegated the authority to enforce these rules.

Larger boilers, in particular those used in public utility electricity generation, are also subject to newer requirements in 40CFR Parts 72 - 78, the Acid Rain Program. Applicability of these rules is found in Part 72.6 and the CEM requirements are found in Part 75.

407.2 PERFORMANCE SPECIFICATIONS

Appendix B of the USEPA New Source Performance Standards (40CFR 60) gives the performance specifications for CEMs which measure opacity, SO_2, NOx, O_2, CO_2, CO, H_2S, and total reduced sulfur (TRS). These specifications include:

- relative accuracy
- calibration error
- response time
- conditioning period (needed to break in equipment)
- operational test period
- zero drift (24 hr)
- calibration drift
- data recorder resolution
- span gases
- sampling location

The conditions of Appendix B must be met for each installation before a CEM can be certified for compliance use. Most local districts in California accept these specifications verbatim, although some may have additional requirements.

Similarly, Part 75 (Continuous Emission Monitoring) of the Acid Rain Program has performance specifications and operating requirements for CEMs. These are located in 40CFR75 Appendix A and are often stricter than 40CFR60 Appendix B.

CEM Performance

SCAQMD Rule 218 requires **certification** of each type of continuous emission monitor. This is a three-part process including written application, installation and source testing, and final application evaluation. For facilities subject to the Regional Clean Air Incentives Market (RECLAIM), Rule 218 has been superseded by Rules 2011 and 2012 of RECLAIM. BAAQMD has similar requirements for CEM certification, as defined in their Manual of Procedures, Volume 5.

CARB Method 100, Procedure for Continuous Gaseous Emission Stack Sampling, provides specific requirements for the sampling methods. Method 100 is a CARB approved alternative to EPA reference methods, in particular EPA methods 3, 6, 7, and 10.

407.3 QUALITY ASSURANCE

Quality assurance (QA) procedures for the acceptable operation of these monitors are found in 40CFR 60, Appendix F. These QA procedures include:

QA/QC

- daily calibration with two concentrations of span gas
- quarterly auditing of the span gas cylinder
- yearly comparison with source test to determine relative accuracy
- proper recordkeeping of the QA steps taken
- records available for inspection

Most local districts in California accept these specifications verbatim although some may have additional requirements. For those utility units included in the Acid Rain Program, QA procedures are included in 40CFR 75 Appendix B.

407.4 CEM REPORTING REQUIREMENTS

Excess Emission Reports

Whenever CEMs are required, the data must be reported periodically to an administrator. In addition, excess emissions must be reported promptly. California Health and Safety Code Section 42706 requires that any exceedence of an emission limit must be reported to the local air district within 96 hours. The district shall, in turn, report the violation to CARB within five working days.

Other reporting requirements may be found in the applicable federal or local regulations or in the Permit to Operate. These may include:

- the results of any performance evaluation of the CEM
- a quarterly excess emission report
- a quarterly report calculating total emissions and/or 30-day average emissions
- results of daily drift tests and quarterly accuracy assessments
- modifications to the CEM
- time periods when the CEM is not in operation

The reporting requirements can be extensive and can vary depending on the source and district.

407.5 ENFORCEMENT USING CEM DATA

Direct Compliance CEMs

Some regulations (40CFR 60.46b(e) Industrial Boilers, for example) state specifically that CEMs are to be used to determine if the emissions from a source are in compliance. CEMs operated under this type of regulation are known as direct compliance CEMs. Direct compliance CEMs may also be required by local rules or the Permit to Operate. Emission exceedences documented by a direct compliance CEM can lead directly to a Notice of Violation.

Compliance Indicating CEMs

Most current CEMs, however, are not governed by direct compliance rules. They are considered compliance indicating only. Although a high emissions reading indicates noncompliance, further documentation (usually a source test using the official test method) is required before a Notice of Violation is issued.

Enforcement Using CEMs

An enforcement action can also occur as a result of a source test to verify the performance of the CEM. In this type of test the monitor is compared to a reference test method and may also be compared directly to a standard gas mixture. The monitor is required to be accurate to at least ± 20% as compared to the reference test, and is required to be calibrated to at least ± 5% accuracy as compared to the standard gas. Whenever a CEM exceeds one of these requirements, the primary concern is that the source test data are accurate and representative of the effluent stream being measured. If a span gas is used to check calibration, its traceability to the National Bureau of Standards (NBS) must be well documented.

In Part 75 of the Acid Rain Program, the monitor is required to be accurate to at least ± 10% as compared to the reference test. This is a newer and stricter limit for large sources.

Direct source testing is the best method of verifying the performance of a CEM, as it checks the entire system by an independent method. If, during an accuracy test, a monitor is found to be out of specification, it is very helpful in later litigations to determine the reason for the error. This can often be found by a check of the monitor's calibration. The CEM must then be repaired as quickly as possible.

Limits for missing data (data capture rates) are found in the federal regulations, in the local rules, and in Permit conditions. A violation occurs if the monitor does not record data for a minimum number of data points, hours, days, or percentage of time. USEPA Region IX guidelines recommend that a Notice of Violation be issued if monitor downtime exceeds 10% for one quarter year or exceeds 5% for two consecutive quarters for most sources. The limits vary with the local air district rules and Permits. There is also variation within the federal regulations which require CEMs.

As with all air pollution control related equipment, CEM systems must be kept in good working order using proper operations and maintenance procedures.

500 LEGAL REQUIREMENTS

In this chapter we address air quality legal requirements for boilers, including examples of district regulations and pertinent sections of the California Health and Safety Code (H&SC) and the Code of Federal Regulations (CFR). Other environmental regulations also apply to noise, water, and hazardous materials, but they are not the main focus of this manual.

501 TYPES OF REGULATIONS

Boilers are subject to the following regulatory requirements:

1. **Pollutant Emission Limitations** which include limits on:

    Gaseous emissions
        nitrogen oxides (NOx)
        sulfur oxides (SOx)
        carbon monoxide (CO), etc.
    Visible emissions (smoke)
    Particulate matter emissions
    Odors
    Fugitive dust emissions
    Toxic or Hazardous emissions

2. **Permit to Operate** requirements, which include additional conditions placed upon the boiler facility.

3. **Equipment Breakdown** provisions, which require the owner/operator to notify the district air quality agency in the event of a breakdown condition and which provide emergency variance procedures.

Emission Limits

The **pollutant emission limitations** will most likely be found in the adopted air quality regulations of the local air districts. State regulations may also apply to boilers, in particular the state limits on visible emissions and the statewide prohibition of public nuisance (usually odors). These are found in the California Health and Safety Code. The USEPA regulations may also place limits on boiler emissions. These USEPA regulations are found in the New Source Performance Standards (NSPS), Title 40 Part 60 of the Code of Federal Regulations (40CFR 60).

500 LEGAL REQUIREMENTS

The **Permit to Operate** (Permit) is issued by and enforced by the local air district. This Permit may include pollutant limitations which are more strict than those found in the local, state, or federal regulations. This is often the case when a new facility is required to install Best Available Control Technology (BACT) which is capable of reliably reducing emissions to a level below that found in the regulations. The Permit may also place constraints on the operation of the boiler related equipment. These constraints may include the type of fuel burned, the steam load, temperature limits, and continuous emission monitor (CEM) operation.

Variances

The **emergency breakdown** provisions are also administered by the local air district. These rules include the definition of a breakdown and the actions required by the owner/operator in the event of a breakdown. They also establish a structure to allow the owner/operator to apply for a variance. A **variance** is a temporary relaxation of the state and local regulations or permit conditions which allows a facility to continue operation for a specified time until the facility can come back into compliance. The breakdown provisions also require that the local hearing board consider a request for a variance. Federal regulations do not have a variance provision and a variance cannot protect against federal enforcement actions.

When boilers and associated air pollution control devices are operating at or near design standards, the gaseous pollutants and particulate matter emissions passing out of the stack should not be of quantities sufficient to violate the regulatory limits. However, changes in process (such as the fuel charging rate) and degradation of boiler and/or air pollution control components over time will alter the emission rates, perhaps pushing them over regulatory limits.

Boiler operators should have a clear and up-to-date understanding of both the regulatory requirements and the efficiency with which their systems are controlling emissions. Should the facility experience difficulty in complying with regulatory requirements, both the boiler operator and district personnel should be familiar with the applicable variance provisions.

The following sections discuss pollutant emission limitations, permit conditions, and breakdown provisions which may apply to the operation of boilers.

500 LEGAL REQUIREMENTS

501.1 RULE EXEMPTIONS

Many of the regulations create exemptions or less stringent limits for older or smaller boilers. It is common for rules to require all new equipment to meet the most stringent standards but to allow older equipment to function as is until a later date or until it is modified. For this reason it is often necessary to know the date of construction or the date of the latest significant modification for a given furnace. A significant **modification** is defined in 40CFR 60.14 as "... any physical or operational change to an existing facility which results in an increase in the emission rate to the atmosphere of any pollutant to which a standard applies..."

Exemptions

Regulations also often offer exemptions or alternative emissions limits for small boilers. The definition of what is considered a "small boiler" varies widely from district to district. Boilers are most often classified by the amount of heat which can be safely and efficiently generated. This heat generating capacity is usually measured in millions of Btu per hour and these are the units most often seen in the regulations. In some air quality districts, no boilers are exempt. In other districts, boilers with a capacity of less than 5 million Btu/hr., or as high as 1,775 million Btu/hr may be exempt from the regulations. Note that this is the amount of heat put into the furnace, not the amount absorbed to produce steam. The actual heat input is determined by measuring the fuel rate and the fuel heat content.

502 POLLUTANT EMISSION LIMITATIONS

502.1 NITROGEN OXIDES (NOX)

Nitrogen oxide emissions are responsible for a large portion of the photochemical smog, in particular ozone, which plagues California. In fact, most of the state and all of the metropolitan areas are in violation of the state ambient air quality standard for ozone. Boilers are responsible for a significant part of stationary source NOx emissions and most air pollution control districts now have regulations which limit these NOx emissions.

The USEPA regulations also place limits on boiler emissions in the **New Source Performance Standards (NSPS)**. Title 40 Part 60 Subparts D, Da, Db, and Dc of the Code of Federal Regulations place emission limits on some

steam generation units built since 1971. The local California air districts have then incorporated the NSPS into their own rules by reference. The NSPS regulations are summarized in Table 502.1. Please note that there are many exemptions and additions in the regulations which could not be included in the table. Please refer directly to the regulations for specific requirements.

CFR Title 40 Part 76, the Acid Rain Nitrogen Oxides Emission Reduction Program, places limits on many coal-fired boilers. However, because most California coal-fired boilers are the fluidized-bed type, they are not included under Part 76. Please refer directly to the current version of Part 76 to determine if a specific coal-fired boiler is affected.

In most cases, and certainly in the metropolitan areas of California, the NSPS rules have been superseded by local **district rules** which have more stringent NOx, SOx, and particulate limits. For example, the most stringent NSPS rule limits NOx emissions from some boilers to 0.10 pounds per million Btu of heat input. Most districts now have limits of 0.036 pounds per million Btu (approximately 30 ppmv) or lower. Even more stringent for some facilities are the limits allowed in the Permit to Operate, which may be based on the Best Available Control Technology (BACT) at the time the facility was built. Most new or recently built boilers located in our many ozone non-attainment areas are subject to the BACT guidelines. At the time of this printing, BACT for most boilers is about 10 ppmv NOx, using Selective Catalytic Reduction or possibly the new ultra low NOx burners.

Often, NOx emissions are determined with periodic source tests, conducted by either district specialists or by contracted testers which have been CARB certified. However, **continuous emission monitors (CEM)** for NOx are becoming increasingly common. There is also a trend toward the use of portable analyzers if proper stack gas sampling facilities are available. A common item in recent SCAQMD permits is a requirement for heated sample lines from the stack to ground level. Units for measuring NOx emission concentration can be in parts per million by volume (ppm or ppmv) or in pounds of NOx per million Btu of heat generated in the furnace (lbs./million Btu).

The most common NOx rules found in California's air districts are the "Fuel Burning Equipment" rules. These rules prohibit installation of fuel burning equipment unless the NOx emissions do not exceed 140 pounds per hour (as

Table 502.1 - New Source Performance Standards for Boilers

Subpart	Applies to Boilers with a heat input capacity of:	Applies to Boilers built or modified after:	Fuel	NOx limit (lb. NOx per million Btu)	SOx limit (lb. SOx per million Btu)	Particulate limit (lb. per million Btu)	Opacit limit	CEMs required for:
D 40CFR-60.40	250 million Btu/hour or greater	Aug. 17, 1971	gas	0.20		0.10	20%	NOx, O2 or CO2
D 40CFR-60.40	250 million Btu/hour or greater	Aug. 17, 1971	oil	0.30	0.80	0.10	20%	NOx, SOx, opacity, O2 or CO2
D 40CFR-60.40	250 million Btu/hour or greater	Aug. 17, 1971	coal	0.70	1.20	0.10	20%	NOx, SOx, opacity, O2 or CO2
Da 40CFR-60.40a	250 million Btu/hour or greater in an electric utility	Sept. 18, 1978	gas	0.20	0.80 and 90% reduction or 0.20 and zero% reduction	0.030 or 70% reduction	20%	NOx, O2 or CO2
Da 40CFR-60.40a	250 million Btu/hour or greater in an electric utility	Sept. 18, 1978	oil, liquid fuel	0.30	0.80 and 90% reduction or 0.20 and zero% reduction	0.030 or 70% reduction	20%	NOx, SOx, opacity, O2 or CO2
Da 40CFR-60.40a	250 million Btu/hour or greater in an electric utility	Sept. 18, 1978	coal, solid fuel	0.50 for coal 0.60 for pet. coke	1.20 and 90% reduction or 0.60 and 70% reduction	0.030 or 99% reduction	20%	NOx, SOx, opacity, O2 or CO2
Db 40CFR-60.40b	100 million Btu/hour or greater	June 19, 1984	gas	0.10			20%	NOx, O2 or CO2
Db 40CFR-60.40b	100 million Btu/hour or greater	June 19, 1984	gas and biomass	0.30	1.20 and 90% reduction	0.10	20%	NOx, SOx, opacity, O2 or CO2
Db 40CFR-60.40b	100 million Btu/hour or greater	June 19, 1984	oil and biomass	0.30	0.80 and 90% reduction	0.10	20%	NOx, SOx, opacity, O2 or CO2
Db 40CFR-60.40b	100 million Btu/hour or greater	June 19, 1984	coal, solid fuel	0.60	1.20 and 90% reduction	0.05	20%	NOx, SOx, opacity, O2 or CO2
Dc 40CFR-60.40c	10 million Btu/hour to 100 million Btu/hour	June 9, 1989	oil		0.50, or burn oil with 0.5% sulfur or less	0.10	20%	SOx, opacity, O2 or CO2
Dc 40CFR-60.40c	10 million Btu/hour to 100 million Btu/hour	June 9, 1989	coal		1.20 and 90% reduction	0.05	20%	SOx, opacity, O2 or CO2
Dc 40CFR-60.40c	10 million Btu/hour to 100 million Btu/hour	June 9, 1989	wood			0.10	20%	SOx, opacity, O2 or CO2

Note: There are many exemptions and additions in the regulations which could not be included in this table. Please refer to the regulations for specific requirements.

Fuel Burning Equipment Riles

NO_2). Similarly, these rules prohibit equipment which would produce more than 200 pounds per hour of sulfur compounds (as SO_2) or more than 10 pounds per hour of particulates. These rules were derived from early guidelines developed in Los Angeles County in the 1960s. Point sources which produce more than these amounts can have serious detrimental effects on areas immediately downwind.

Other regulations which were developed in the 1960s and 1970s include limits on NOx at about 125 ppm for gas-fired boilers and about 225 ppm for boilers fired with non-gaseous fuels. While some of these rules are still in effect, most have been replaced by more stringent limits as NOx control methods have matured. Recently, low NOx burners have proven effective at reducing NOx emissions to below 30 ppm for natural gas and the burners can generally be installed at an acceptable cost. Consequently, many districts, including those in the Bay Area, the San Joaquin Valley, and the Sacramento Valley, have adopted rules which limit NOx emissions to 30 ppm for gas-fired boilers and to 40 ppm for non-gaseous fuels. Facilities are to be in compliance with these limits in 1996, 1997, or 1998 depending on the district.

NOx Limits

The 30 ppmv level is roughly equivalent to 0.036 lb NOx/million Btu and the 40 ppmv level is roughly 0.052 lb NOx/million Btu. Please note that ppmv and lb/million Btu are different types of units and are not technically interchangeable. The relationship will vary somewhat, especially as the composition of the fuel changes. Both measurements are usually corrected to 3% oxygen in the exhaust gas.

The South Coast AQMD was also heading towards limits of 25 ppm or so for NOx when their RECLAIM plan went into effect. Now, facility-wide limits which are similar to these or perhaps more stringent are found in the Permit to Operate for these facilities.

The 30 ppm limit generally applies to boilers with a rated heat input of greater than 5 million Btu per hour. Some districts may apply the limits to boilers as small as 1 million Btu per hour, or to those larger than 10 million Btu per hour.

Boilers which are used infrequently may be exempt from these limits. Usually, boilers which burn less than 90,000 therms per year are exempt. At 5 million Btu per hour, it would take about 75 days to burn 90,000 therms.

Units which burn both natural gas and a liquid or solid fuel must generally use a weighted average, based on the Btu of each fuel burned, to determine the NOx limit. For example, if the limits are 30 ppm and 40 ppm for gaseous and non-gaseous fuels respectively, a boiler fueled with 50 million Btu per hour of natural gas and 50 million Btu per hour of fuel oil, would have a NOx limit of 35 ppm. An equation for this calculation is generally included in the applicable district rule.

The most stringent rules to date limit large utility plants to only 10 ppmv NOx. This is very close to the current Best Available Control Technology, Selective Catalytic Reduction or ultra low NOx burners. Most of these rules will be effective shortly after 1999.

502.1.1 Biomass Boilers

NOx Limits

Several air districts which have lumber or paper industries have adopted rules especially for biomass boilers. These relatively modern rules generally allow a maximum NOx level of just over 100 ppm. There is also an option to remove at least 50% of the uncontrolled NOx emissions from the exhaust gas stream.

502.1.2 Oil Recovery Steam Generators

Some local air districts (San Joaquin Valley in particular) have rules written specifically for the once-through steam generators used with thermally enhanced oil recovery wells. In general, these rules apply only to older existing steam generators while new equipment must comply with the more modern emissions limits. These rules limit NOx emissions to levels ranging from 0.14 lbs NOx per million Btu of heat input to 0.38 lbs NOx/ million Btu. The higher limits apply to smaller steam generators and to equipment owned by smaller local operators (versus large national oil companies).

502.2 SULFUR OXIDES (SOX)

The most common SOx rules found in California's air districts are the "Fuel Burning Equipment" rules. These rules prohibit installation of fuel burning equipment unless the SOx emissions do not exceed 200 pounds per hour of

sulfur compounds (as SO_2). As mentioned in our discussion on NOx, these rules were developed in Los Angeles County in the 1960s and were later adopted by most other air districts to protect the areas immediately downwind.

SOx Limits

All air districts limit the concentration of sulfur dioxide which may be discharged into the atmosphere. The most common and also the most lenient of these rules typically reads:

"A person shall not discharge into the atmosphere sulfur compounds, which would exist as a liquid or gas at standard conditions, exceeding in concentration at the point of discharge: 0.2 percent by volume (or 2000 ppmv) calculated as sulfur dioxide (SO_2), on a dry basis average over 15 consecutive minutes."

Many districts now have more stringent limits such as the 200 ppmv and 300 ppmv limits found in several areas. A variation on this type of rule limits the quantity of SO_2 emissions per million Btu of fuel burned. For example, the BAAQMD limits electric utility emissions to 1.20 pounds of SO_2 per million Btu of solid fuel burned, or to 0.80 pounds of SO_2 per million Btu of liquid or gas fuel burned. In San Joaquin oilfield steam generators, the limit is 0.11 pounds of SO_2 per million Btu of fuel.

Sulfur in Fuel

Another way of reducing SOx emissions is to limit the amount of sulfur allowed in the fuel. The most common rule of this type prohibits the burning of fuel oil which contains more than 0.5% sulfur. Fuel oil containing less than 0.5% sulfur is commonly referred to as **low-sulfur fuel oil**. A similar limit of 0.5% sulfur is also often applied to solid fuels.

Similarly, a common limit for gaseous fuels is 50 grains of H_2S per 100 SCF (standard cubic feet) of fuel gas. There are 7000 grains per pound. San Diego has reduced this limit further to 10 grains of H_2S/100 SCF of fuel gas, and the limit varies from 10 to 50 gr./100 SCF among the other districts. The sulfur content of commercial natural gas is limited to 0.75 grains/ 100 SCF. This limit is determined and regulated by the Public Utilities Commission as a prerequisite to pumping gas into the public natural gas pipeline system.

Some districts also prohibit a facility from creating ground-level concentrations of SO_2 which are higher than the state ambient air quality standard. For example, average ground-level SO_2 concentrations cannot exceed 0.5 ppmv for

a 3 minute average, 0.25 ppmv for a 60 minute average, or 0.05 ppmv averaged over 24 hours (there are slight variations among district limits). These concentrations are typically measured outside the property boundary of the facility.

502.2.1 Oil Recovery Steam Generators

As we noted, some local air districts may have rules written specifically for the once-through steam generators used with thermally enhanced oil recovery wells. In general, these rules apply only to older existing steam generators, while new equipment must comply with the more modern emissions limits. The San Joaquin Valley UAPCD rule limits SOx emissions to 0.11 lbs SOx per million Btu of heat input for steam generators installed prior to 1980.

502.3 CARBON MONOXIDE (CO)

Not all of the air districts in California limit emissions of carbon monoxide from boilers. Those that do limit CO are very consistent with a limit of 400 ppm in almost all cases. There are still a few districts with a limit of 1000 ppm CO or higher, however. In general, the CO level in the stack gas is measured dry (all of the water vapor must be removed) and corrected to 3% excess oxygen.

CO Limits

During conventional boiler operation, increasing excess oxygen to the flame will cause the carbon monoxide levels in the exhaust gas to drop. Conversely, reducing excess oxygen to the flame will cause the carbon monoxide levels in the exhaust gas to rise. As the excess oxygen is reduced to just below 3% or so, the carbon monoxide levels begin to increase rapidly. The CO level at this point is slightly below 400 ppm. This is why most of the regulations are consistent at 400 ppm. It is a practical limit based on what is currently achievable and efficient.

502.4 VISIBLE EMISSIONS (SMOKE)

All of the local air pollution control districts in California have a visible emissions prohibitory rule. These rules vary in wording, but in almost all cases they express the following:

"... no person shall discharge into the atmosphere from any source whatsoever any contaminant, other than uncombined water vapor, for a period or periods aggregating more than three minutes in any one hour which is:

Smoke Limits

(a) As dark or darker in shade as that designated as No. 1 (or 20% opacity) on the Ringelmann Chart, as published by the United States Bureau of Mines,

(b) Or of such opacity as to obscure an observer's view to a degree equal to or greater than does smoke described in subdivision (a)."

The State standard for visible emissions (Section 41701, California Health and Safety Code) is No. 2 on the Ringelmann Chart, or 40% opacity. Some local air districts continue to use this higher limit.

The Ringelmann Chart is a device used for determining whether emissions of black smoke are within established limits or standards of permissibility (statutes and ordinances) with reference to the Ringelmann Chart. Smoke density in a plume is compared with a series of graduated shades of gray on the Ringelmann Chart, and the smoke density is thus judged by the viewer. The density of white smoke can also be determined by the human eye. This measurement is reported as percent opacity by convention.

Smoke Reading

EPA Reference Method 9 (see Appendices) describes in detail how such visible emission evaluations should be properly performed, and how to be certified to perform them. The Compliance Division of the ARB trains and certifies government and industry personnel in visible emissions evaluations at its popular "Fundamentals of Enforcement" class which is offered four times a year. Certified personnel are required to recertify every six months in order to demonstrate ongoing evaluation skill.

When reducing the data, the inspector should aggregate the readings taken at 15-second time intervals where the opacity was observed to exceed the Ringelmann limit. Every aggregate of over three minutes of such readings, made in a one hour period, constitutes a violation. This data reduction method reflects the visible emissions limitation in California Health and Safety Code (H&SC) Section 41701. Note that this procedure of data reduction results in more stringent emissions limitations than the Federal method as stated in

Method 9. According to Method 9, opacity is determined as an average of 24 consecutive observations recorded at 15-second intervals (i.e., six consecutive minutes of readings, averaged).

OpacitySmoke Reading

Opacity is commonly monitored using a continuous emission monitor (CEM), especially on larger and/or newer boilers. The CEM readings will be in terms of percent opacity rather than Ringelmann numbers, for both black and white smoke.

Some districts make a partial exemption to this rule. If a district has a limit of Ringelmann 1 or 20% opacity, it can allow a relaxation to Ringelmann 2 or 40% opacity in some cases. In particular, some districts provide this relaxation for a few minutes each day to allow for soot blowing of boiler tubes.

One other exemption to this rule applies when water vapor or steam causes high visible emissions readings. This exemption is written into most district rules. When high opacity emissions are observed, it is the responsibility of the emission source to prove that water vapor was the sole cause of the high opacity. Steam added to exhaust may hide true visible emissions. For this reason, you may find rules and/or permit conditions which prohibit the unnecessary addition of steam to the exhaust stack.

502.5 PARTICULATE MATTER EMISSIONS

The "Fuel Burning Equipment" rules which are common to most air districts prohibit installation of fuel burning equipment unless the particulate emissions do not exceed 10 pounds per hour (or up to 40 lbs/hr in some districts).

The concentration of particulate type emissions are generally limited in Combustion Contaminant rules. **Combustion contaminants** are commonly defined as any particulate matter discharged into the atmosphere from the burning of any material which contains carbon in either the free or the combined state.

The particulate matter limits are expressed in terms of grains of particulate per dry standard cubic foot of exhaust gas, corrected to 12% CO_2. A grain is a weight measurement and there are 7000 grains per pound. CO_2 concentrations

of less than 12% can indicate dilution by air, so the concentration measurements are corrected to 12% CO_2 in order to prevent dilution of the sample.

Particulates

The grain loading limits for the combustion contaminant rules vary widely from district to district. Most of the larger air districts have a limit of 0.1 grains per dry standard cubic foot of exhaust gas (gr./dscf). Other districts vary, usually with limits between 0.1 gr./dscf and 0.3 gr./dscf. The combustion contaminant limit can also be expressed in terms of grams per cubic meter (also corrected to 12% CO_2). O.23 grams per cubic meter is approximately equal to 0.1 grains per cubic foot.

Some districts make a special allowance for wood fired boilers and set the particulate emission limit higher than for other facilities. These higher allowable limits might also apply to biomass fuels or other alternative fuel sources.

Also, some regulations allow higher particulate emissions for older facilities. Several districts have higher limits for facilities built before about 1972.

CARB Method 5 is used in most air districts to source test a facility for the determination of particulate emissions concentrations. This method is discussed the inspection section of this manual.

502.6 ODORS

Many facilities which have boilers may sometimes be sources of odors. When faced with an odor source which is causing a public nuisance, most district inspectors will cite California Health & Safety Code (H&SC) Section 41700, which states:

Public Nuisance

"Except as otherwise provided in section 41705 [agricultural exemptions], *no person shall discharge from any source whatsoever such quantities of air contaminants or other material which cause injury, detriment, nuisance, or annoyance to any considerable number of persons or the public, or which causes or have a natural tendency to cause, injury or damage to business or property."*

502.7 FUGITIVE DUST EMISSIONS

Dust

Boiler systems which burn coal, biomass, or other solid fuels may be subject to rules prohibiting certain fugitive dust emissions. Fuel handling systems are prone to cause dust, which can then be picked up by the wind. There are several ways in which dusty conditions can become a rule violation.

- When airborne dust crosses the property line and neighbors complain, the owner is subject to H&SC Section 41700, The Nuisance Law.
- When airborne dust has an opacity greater than the district's visible emissions limit (usually 20% opacity).
- When spills and other carryout are found offsite, such as dust piles along the road.
- When Permit conditions are not followed.
- When a local fugitive dust rule is not followed.

502.8 TOXIC OR HAZARDOUS EMISSIONS

AmmoniaSmoke Reading

Ammonia (NH_3) emissions have become a concern for boilers equipped with selective catalytic reduction (SCR) or selective noncatalytic reduction (SNCR). Because ammonia is added to the exhaust gas to react with and remove NOx, addition of too much ammonia can lead to unreacted ammonia emissions, known as ammonia slip. Most air districts which require low NOx emissions or BACT also place a limit on the allowable amount of ammonia slip. This limit is generally set at 10 ppm.

In addition, some districts are concerned with the safety aspects of using anhydrous ammonia. Uncontrolled releases of anhydrous ammonia have a significant potential to kill people. Some districts have included in their rules a prohibition of using anhydrous ammonia in SCR or SNCR.

502.9 USED OILS

Used oil often contains toxic metals, hazardous organic compounds and chlorinated solvents. Consequently, the state of California has prohibited burning used oils as fuel, mixing used oils with fuel or other wastes, or

incineration of used oils. Used oils are to be handled as a hazardous waste until they are recycled. This law is found in the Health and Safety Code sections 25250 through 25250.25, in particular, section 25250.5.

Per H&SC 25250.1, *"used oil" means any of the following:*

Used Oil

(1) Any oil that has been refined from crude oil, and has been used, and, as a result of use, has been contaminated with chemical or physical impurities.
(2) Any oil that has been refined from crude oil and, as a consequence of extended storage, spillage, or contamination with nonhazardous impurities such as dirt and water, is no longer useful to the original purchaser.
(3) Spent lubricating fluids which have been removed from an engine crankcase, transmission, gearbox, or differential of an automobile, bus, truck, vessel, plane, heavy equipment, or machinery powered by an internal combustion engine.
(4) Spent industrial oils, including compressor, turbine, and bearing oil, hydraulic oil, metalworking oil, refrigeration oil, and railroad drainings.
(5) Contaminated fuel oil with a flash point greater than 100°F.

25250.3 Any virgin oil product or partially refined product, which has not been previously used, which has become contaminated with nonhazardous impurities such as dirt or water, and which has been returned to bulk storage by the products manufacturer, transporter, or wholesaler for gravity separation of contaminants, is exempt from this article. Any petroleum product which becomes contaminated with any other petroleum product during refining, transportation by pipeline, or storage and which remains usable as a refinery feed stock or as a refinery fuel is exempt from this article.

25250.5(a) Disposal of used oil by discharge to sewers, drainage systems, surface or groundwaters, watercourses, or marine waters; by ***incineration or burning as fuel****; or by deposit on land, is prohibited, unless authorized under other provisions of law.*

502.10 CONTINUOUS EMISSION MONITORS (CEMS)

The regulations concerning CEMs were addressed briefly in Section 407.

503 OPERATIONAL REQUIREMENTS

Tune-ups

In an attempt to encourage the efficient operation of boilers, several districts now require that some or all of their boilers have a tune-up each year. In these rules, a tune-up procedure is included or referenced. These tune-up procedures are similar to the procedure found in the USEPA's New Source Performance Standards (NSPS). A copy of this procedure is included in the appendices. An annual tune-up report must generally be sent to the local Air Pollution Control Officer.

Some regulations may require that modern boilers be operated at an excess oxygen level of 3% or less. This low excess air operation is known to minimize the formation of NOx in most cases.

The type of fuel to be burned can also be specified in local rules. In particular, it is common to require that natural gas be burned rather than fuel oils. Fuel use records are also often required. These normally include the type of fuel, the higher heating value, nitrogen content, sulfur content, and other characteristics.

503.1 PERMIT CONDITIONS

Under the authority of the California Health and Safety Code (H&SC), and in order to comply with the California State Implementation Plan and New Source Performance Standards where applicable, the districts issue conditions, other than the applicable general emissions limitations, for the operation of boilers and their related emission control equipment. Boilers must function within the parameters stated in the Permit to Operate (PO) issued by the district. Failure to do so is a violation of Permit conditions. Permits to Operate should be posted in the location designated by the instructions on the Permit or in the district rule.

The Permit conditions can be subdivided into several broad categories:

1. Emissions Limitations
2. Equipment Requirements
3. Operating Conditions

4. Monitoring and Recording Requirements
5. Compliance Testing
6. General Requirements

Permit to Operate

Some example Permit conditions are included here from each of the above types. It is hoped that by including actual conditions taken from a variety of Permits, you will get a feel for what the Permit to Operate can require. Some Permits are very short with only one or two conditions for operation. Others may be many pages in length with a long list of conditions. By no means are all of the possible Permit conditions represented here and, conversely, it is unlikely that any existing Permit will or should include all of the following example conditions.

Example Permit Conditions - Emissions Limits

• No air contaminant shall be released into the atmosphere which causes a public nuisance.

• No air contaminant shall be discharged into the atmosphere for a period or periods aggregating more than 3 minutes in any one hour which is as dark or darker than Ringelmann 1 or equivalent 20% opacity.

• The NOx emission concentration shall not exceed 30 ppm, by volume, dry, corrected to 3% oxygen.

• The CO emission concentration shall not exceed 250 ppm, by volume, dry, corrected to 3% oxygen.

• NOx emissions shall not exceed 10.8 pounds in any one day.

• CO emissions shall not exceed 60.0 pounds in any one day.

Example Permit Conditions - Equipment

• The boiler shall be equipped with an automatic air-to-fuel ratio control system.

• The boiler shall be equipped with low-NOx burners.

Permit Condition Examples

- The flue gas shall be vented through a selective catalytic reduction (SCR) unit at all times.

- A Thermal De-NOx system utilizing ammonia injection shall be incorporated within the boiler at a point where a temperature range of 1500-1700 degrees Fahrenheit is provided during normal operations.

- The flue gas from the combustor shall be vented through a baghouse at all times (including soot blowing periods).

- The baghouse shall have a maximum effective air-to-cloth ratio of 4:1 and shall be equipped with an automatic pulse jet cleaning mechanism.

- The baghouse shall be equipped with a pressure differential gauge to indicate the pressure drop across the bags. The gauge shall be maintained in good working order at all times.

- The boiler shall be equipped with a fuel meter for natural gas.

- The stack height shall be 150 feet.

Example Permit Conditions - Operation

- The boiler shall only be fired on natural gas.

- Natural gas usage shall not exceed 20,000,000 standard cubic feet in any calendar quarter.

- During boiler operation, the inlet temperature to the SCR unit shall be kept between 600 ^{o}F and 750 ^{o}F.

- Ammonia shall be injected at an NH_3/NOx ratio which assures that the NOx emissions will not exceed the Lowest Achievable Emission Rate.

- Collected particulate matter and ashes shall be disposed of in a manner which prevents entrainment of the material into the ambient air.

Permit Condition Examples

• Natural gas fired burners shall be used during start-up to reach solid fuel ignition temperature throughout the combustor before feeding any solid fuel.

• Limestone shall be injected directly into the combustion chamber at a Ca/S ratio which assures that the SOx emissions will not exceed the Lowest Achievable Emission Rate.

• The overall excess air in the circulating fluidized bed combustor shall not exceed 25 percent.

• The boiler may be fired on Utah Equivalent coal, Canadian coal, fluid coke, or delayed coke.

• Only during breakdown conditions may the stack bypass valves be opened, thus bypassing the scrubber.

• The equipment must be properly maintained and kept in good operating condition at all times.

Example Permit Conditions - Monitoring

• The permittee shall provide, properly install, and maintain in good working order continuous monitoring and recording systems to measure NOx, SOx, opacity, and CO.

• All continuous monitoring and recording instruments shall be installed, calibrated and operated in accordance with the requirements of 40 CFR, Part 60, Appendix B and Appendix F.

Example Permit Conditions - Compliance Testing

• Source testing for NOx, CO, and VOC to demonstrate compliance with permit conditions and all rules and regulations shall be conducted within 90 days of initial start-up and on an annual basis thereafter.

• Source testing shall be conducted using the methods and procedures approved by the district. The district shall be notified 30 days prior to any compliance source test, and a source test plan shall be submitted for approval 15 days prior to testing.

• The results of each source test shall be submitted to the District within 30 days of completion of source testing.

• The boiler shall be tuned at least once per year by a qualified technician. The tune-up shall be performed in accordance with the attached procedure.

Example Permit Conditions - General

• The permittee shall notify the District in writing of the anticipated date of start-up at least 30 days prior to such date and of the actual time of start-up at least 24 hours prior to start-up.

• A daily log of the fuel usage shall be kept on the premises, and shall be made available for District inspection upon request.

• The District shall be notified immediately of any failure of air pollution control equipment, emissions monitoring equipment, or any process resulting in an increase in emissions above any of the allowable emission limits (including State or Federal).

• The District shall be notified in writing within 10 days following the correction of any such failure.

• An ultimate analysis for each stock of fuel received shall be maintained on the premises at all times and shall be made available for District inspection upon request. The analysis shall include the heating value, and the sulfur and nitrogen content.

• All boiler operators shall have access to and be familiar with an Operations and Maintenance Manual (O&M) prepared specifically for this installation. The manual shall include: 1) General information about the boiler design and equipment, 2) Procedures and operating parameters, 3) Preventative maintenance schedules, inspection and repair programs, and the recommended spare parts inventory, 4) Contingency plans for fuel supply interruption, 5) Emergency procedures for incidents such as fires, gas leaks, power losses, and spills.

Permit Condition Examples

504 EQUIPMENT BREAKDOWN PROVISIONS

Each district has an equipment breakdown (or excusable equipment malfunction) rule. The rule enables a source qualifying under stated conditions to avoid enforcement action otherwise precipitated by failure of that source to comply with air pollution regulations as a result of a malfunction of any air pollution control equipment or related operating equipment. Malfunctions of in-stack monitoring equipment are also addressed in the rule.

Sources should keep a copy of the breakdown rule on location. They should also be familiar with their responsibilities in the event of an equipment malfunction.

Breakdown Conditions

The conditions that a malfunction must meet in order to qualify for district breakdown provisions vary from district to district. Typically, the following are conditions for an acceptable breakdown:

1. The breakdown must result from a failure that was unforeseeable;
2. It must not be the result of neglect or disregard of any air pollution control law or rule or regulation;
3. It must not be intentional, or the result of negligence;
4. It must not be the result of improper maintenance;
5. It must not constitute a nuisance; and
6. It must not be an abnormally recurrent breakdown of the same equipment.

Breakdown Procedures

District rules also list a number of procedures which must be followed in reporting the breakdown in a timely manner to the district. If the breakdown is not reported to the district within the allowed time period, as stated in the rule, a separate violation occurs, for which enforcement action is appropriate.

When a breakdown is reported to the district it is recorded in the district's breakdown log. Sources must provide the district with the following information:

1. The source's name and location, and the source contact's name and telephone number;
2. The specific equipment affected by the breakdown;
3. The specific equipment that failed;
4. The date and time that the breakdown occurred;

5. The date and time that the breakdown is being reported to the district; and
6. The source's proposed action.

Breakdown Reports

Upon receipt of a breakdown report, the district performs an investigation to determine whether the malfunction meets the prescribed breakdown conditions. This investigation includes an onsite inspection of the malfunctioning equipment. If the inspector does not find a breakdown condition at the source, he may take appropriate enforcement action including, but not limited to, seeking fines, an abatement order, or an injunction against further operation.

If a source files a breakdown report which falsely, or without probable cause, claims a malfunction to be a breakdown occurrence, this shall constitute a separate violation. The burden of proof shall be on the source to provide sufficient information that a breakdown did occur. If the source fails to do this, the district will undertake appropriate enforcement action.

A source with a breakdown must take immediate steps to correct the equipment malfunction as quickly as possible. If a source finds that a malfunction cannot be repaired within the district's allowable duration of a breakdown, the source may file for an emergency **variance** in order to avoid enforcement action.

Correction

District rules require sources to submit in writing the following details to the district air pollution control officer within a stated time period of the correction of the breakdown occurrence:

1. The duration of excessive emissions;
2. An estimate of the quantity of excess emissions;
3. A statement of the cause of the occurrence;
4. Corrective measures to be taken to prevent recurrences; and
5. Proof of the source's return to compliance, including the date and time that the breakdown was corrected.

Besides the information mentioned above, the district log will also include the following items, some of which will be filled in as the case continues:

1. A confirmation that the breakdown is allowable under district rules;
2. The name of the district investigator;

3. The initial inspection file number;
4. The compliance confirmation inspection file number;
5. The date that the breakdown correction report was filed by the source; and
6. An indication if a variance was requested.

504.1 VARIANCES

A source may petition for a variance if either of the following is true:

1. Pollution control equipment has broken down and meets the criteria for breakdown condition under district rules; however, the source operator finds that it will take longer to repair the breakdown than provided for under the district breakdown rule. In such a case, a source operator may wish to apply for an emergency variance.

2. A source finds itself to be out of compliance, is found to be out of compliance, or expects to soon be out of compliance, with any air pollution control district rule or regulation, or with Section 41701 of the California Health and Safety Code (H&SC).

If a source falls into either of the above categories at any time, it should consider applying for a variance. A source's purpose in applying for a variance is to attempt to shield itself from state and local enforcement action while it is out of compliance. Federal regulations do not have a variance provision and a variance cannot protect against federal enforcement actions. Sources should be advised that the initiative to file for a variance and to prove that they need a variance rests on them.

Interim Variance

A source can apply for a short variance (90 day maximum) or a regular variance (over 90 days and 1 year maximum unless a schedule of increments of progress is included). Interim variances are also available which gives the source protection from enforcement action until their original application for variance can be noticed and heard by the hearing board, or up to 90 days, whichever is shorter. Interim and emergency variance orders, if issued, are typically granted the same day they are requested. A written petition must be submitted before these (and all other) variances are granted.

It is the source's responsibility to estimate the amount of time it will need to be under variance, and to then apply for the appropriate type of variance.

A source should be aware that the decision on whether to grant any variance rests with the district variance hearing board and not with the air pollution control officer or that person s staff.

Rules for variance procedures vary from district to district. The district rules are based on H&SC statutes, however, in some districts the rules are stricter than H&SC requirements. Some of the applicable statutes are listed in Section 505 of this manual. District personnel as well as source operators should be familiar with these statutes and with the any local district variance rules.

With regard to variances, State law (H&SC) requires that:

H&SC Requirements

1. The district should not allow sources to operate in violation of district rules without a variance, even if the source is working towards finding a solution to the problem. Source operators should be aware that under H&SC Section 42400.2, if they continue to operate in violation of district rules, they are subject to a $25,000 per day fine and up to 12 months in county jail.

2. All variance hearings should be noticed properly in accordance with H&SC Sections 40823 through 40827. Section 40826 requires a 30-day notice period for hearings for variances over a 90-day duration.

3. No variance shall be granted unless the hearing board makes all of the findings listed in H&SC, Section 42352.

The Air Resources Board recommends that the following procedures be observed in the various stages involved from the time a source petitions for a variance through the end of the variance period. Some of these recommendations may not be a part of all districts variance programs at this time; or, they may be written but not implemented procedures.

CARB Recommendations

1. Parties petitioning for variances should be required to fill out a petition form in writing.

CARB Recommendations

2. The district will require sources to provide excess emissions figures on the petitions they submit. This information will be evaluated by the district staff. The emission figures are presented to the hearing board, so that the board formally recognizes, and the public may be aware of, the emissions impact of the variance. If the variance is granted, these limits must be included in the final variance order.

3. An interim variance can be granted to cover the time period from filing the petition for a regular or short variance until a decision is rendered on whether the variance is granted. This interim variance can subject the source to operating conditions during that interim period.

4. Variances should not be granted retroactively. The date that variance coverage begins cannot predate the date on which the petition was filed.

5. Each variance order will specify the equipment under variance and the district rule or regulation violated.

6. The district should schedule increments of progress for sources under variance. Increments of progress are required for variances over one year. District staff should verify that the source is meeting these increments of progress.

7. The district should require the source to quantify excess emissions that will occur during the period of variance.

8. At the end of the variance period, the district shall inspect the source to ensure that it is in compliance with all district air pollution regulations.

505 HEALTH AND SAFETY CODE

The following California Health and Safety Code (H&SC) references are included to demonstrate the authority of district air pollution control districts to adopt regulations, issue permit conditions, perform inspections and pursue enforcement action. Please note that **these regulations are subject to change** and the reader is cautioned to **refer to the current version of the H&SC** when necessary. The relevant Health and Safety Code Sections are presented in numerical order:

39000	Legislative Findings - Environment
39001	Legislative Findings - Agency Coordination
39002	Local and State Agency Responsibilities
39003	ARB Responsibilities
40000	Local/State Responsibilities
40001	Adoption and Enforcement of Rules and Regulations
40702	Adoption of Rules and Regulations
40823	Hearing Board Shall Serve 10 Days Notice
40824	Reasonable Notice for Interim Variance
40825	10 Day Notice for Variances up to 90 Days
40826	30 Day Notice for Regular Variances
41509	No Limitation on Power to Abate Nuisance
41510	Right of Entry With Inspection Warrant
41700	No Person Shall Discharge Pollutants (Public Nuisance)
41701	No Emissions Shall Exceed Ringelmann 2 (Ringelmann/ Opacity Standards)
42300	District Permit System
42301	Requirements For Permit Issuance
42303	Air Contaminant Discharge: Information Disclosure
42303.5	False Statements in Permit Applications
42304	Permit Suspension (Failure to Supply Information)
42350	Applications for Variance
42351	Interim Variance Applications
42351.5	Interim Authorization of Schedule Modification
42352	Findings Required for Issuance of Variance
42353	Other Requirements for Specified Industry, Business, Activity or Individuals
42354	Wide Discretion in Prescribing Requirements
42355	Hearing Board Bond Requirements
42356	Hearing Board Variance Modification or Revocation
42357	Hearing Board Review of Schedule of Increments of Progress or Final Compliance Date
42358	Effective Period of Order, Final Compliance Date
42359	Public Hearing Requirements; Emergency Exceptions
42359.5	Emergency Variances
42360	Copy of Variance Orders to ARB
42361	Validity of Variance Time
42362	Variance Revocation or Modification

42363 ARB Hearing Prior to Action
42364 Schedule of Fees
42400 General Violations, Criminal
42400.1 Negligence, Criminal
42400.2 Document Falsification or Failure to Take Corrective Action, Criminal
42400.3 Willfully and Intentionally Emitting an Air Contaminant
42401 Violating Order of Abatement, Civil
42402 General Violations, Civil
42402.1 Negligence or Actual Injury, Civil
42402.2 Document Falsification or Failure to Take Corrective Action, Civil
42402.3 Civil Penalties
42402.5 Administrative Penalties
42403 Recovery of Civil Penalties
42404.5 Statute of Limitations for Civil Actions
42450 Orders of Abatement: District Board; Authority; Notice and Hearing
42700 Monitoring Devices: Legislative Findings & Declarations
42701 Determination of Availability, Technological Feasibility, and Economic Reasonableness
42702 Specification of Types of Stationary Sources, Processes and Contaminants
42703 Reimbursement for Actual Testing Expenses
42704 Determination of Availability; Revocation or Suspension
42705 Records
42706 Report of Violation of Emission Standard
42707 Inspection; Fees
42708 Powers of Local or Regional Authority

39000 LEGISLATIVE FINDINGS - ENVIRONMENT

The Legislature finds and declares that the people of the State of California have a primary interest in the quality of the physical environment in which they live, and that this physical environment is being degraded by the waste and refuse of civilization polluting the atmosphere, thereby creating a situation which is detrimental to the health, safety, welfare, and sense of well-being of the people of California.

39001 AGENCY COORDINATION

The Legislature, therefore, declares that this public interest shall be safeguarded by an intensive, coordinated state, regional, and local effort to protect and enhance the ambient air quality of the state. Since air pollution knows no political boundaries, the Legislature declares that a regional approach to the problem should be encouraged whenever possible and, to this end, the state is divided into air basins. The state should provide incentives for such regional strategies, respecting, when necessary, existing political boundaries.

39002 LOCAL AND STATE RESPONSIBILITIES

Local and regional authorities have the primary responsibility for control of air pollution from all sources other than vehicular sources. The control of vehicular sources, except as otherwise provided in this division, shall be the responsibility of the State Air Resources Board. Except as otherwise provided in this division, including, but not limited to, Sections 41809, 41810, and 41904, local and regional authorities may establish stricter standards than those set by law or by the state board for nonvehicular sources. However, the state board shall, after holding public hearings as required in this division, undertake control activities in any area wherein it determines that the local or regional authority has failed to meet the responsibilities given to it by this division or by any other provision of law.

39003 ARB RESPONSIBILITIES

The State Air Resources Board is the state agency charged with coordinating efforts to attain and maintain ambient air quality standards, to conduct research into the causes of and solution to air pollution, and to systematically attack the serious problem caused by motor vehicles, which is the major source of air pollution in many areas of the state.

40000 LOCAL/STATE RESPONSIBILITIES

The Legislature finds and declares that local and regional authorities have the primary responsibility for control of air pollution from all sources, other than emissions from motor vehicles. The control of emissions from motor vehicles, except as otherwise provided in this division, shall be the responsibility of the state board.

40001 ADOPTION OF REGULATIONS

(a) Subject to the powers and duties of the state board, the districts shall adopt and enforce rules and regulations to achieve and maintain the state and federal ambient air quality standards in all areas affected by emission sources under their jurisdiction, and shall enforce all applicable provisions of state and federal law.

(b) The district rules and regulations may, and at the request of the state board shall, provide for the prevention and abatement of air pollution episodes which, at intervals, cause discomfort or health risks to, or damage to the property of, a significant number of persons or class of persons.

(c) Prior to adopting any rule or regulation to reduce criteria pollutants, a district shall determine that there is a problem that the proposed rule or regulation will alleviate and that the rule or regulation will promote the attainment or maintenance of state or federal ambient air quality standards.

(d) (1) The district rules and regulations shall include a process to approve alternative methods of complying with emission control requirements that provide equivalent emission reductions, emissions monitoring, or recordkeeping.

(2) A district shall allow the implementation of alternative methods of emission reduction, emissions monitoring, or recordkeeping if a facility demonstrates to the satisfaction of the district that those alternative methods will provide equivalent performance. Any alternative method of emission reduction, emissions monitoring, or recordkeeping proposed by the facility shall not violate other provisions of law.

(3) If a district rule specifies an emission limit for a facility or system, the district shall not set operational or effectiveness requirements for any specific emission control equipment operating on a facility or system under that limit. Any alternative method of emission reduction, emissions monitoring, or recordkeeping proposed by the facility shall include the necessary operational and effectiveness measurement elements that can be included as permit conditions by the district to ensure compliance with, and enforcement of, the equivalent performance requirements of paragraphs (1) and (2). Nothing in this subdivision limits the district's authority to inspect a facility's equipment or records to ensure operational compliance. This paragraph shall apply to existing rules and facilities operating under those rules.

40702 ADOPTION OF RULES AND REGULATIONS

A district shall adopt rules and regulations and do such acts as may be necessary or proper to execute the powers and duties granted to, and imposed upon, the district by this division and other statutory provisions. No order, rule, or regulation of any district shall, however, specify the design of equipment, type of construction, or particular method to be used in reducing the release of air contaminants from railroad locomotives.

40823 HEARINGS - 10 DAYS NOTICE

(a) Except as otherwise provided in Sections 40824, 40825, and 40826, a hearing board shall serve a notice of the time and place of a hearing upon the district air pollution control officer, and upon the applicant or permittee affected, not less than 10 days prior to such hearing.

(b) Except as otherwise provided in Sections 40824, 40825, and 40826, the hearing board shall also send notice of the hearing to every person who requests such notice and obtain publication of such notice in at least one daily newspaper of general circulation within the district. The notice shall state the time and place of the hearing and such other information as may be necessary to reasonably apprise the people within the district of the nature and purpose of the meeting.

40824 REASONABLE NOTICE - INTERIM VARIANCE

In case of a hearing to consider an application for an interim variance, as authorized under Section 42351:

(a) The hearing board shall serve reasonable notice of the time and place of the hearing upon the district air pollution control officer and upon the applicant.

(b) Subdivision (b) of Section 40823 shall not apply.

(c) In districts with a population of less than 750,000, the chairperson of the hearing board, or any other member of the hearing board designated by the board, may hear an application for an interim variance. If any member of the public contests a decision made by a single member of the hearing board, the application shall be reheard by the full hearing board within 10 days of the decision.

40825 10 DAY NOTICE - 90 DAY VARIANCES

In case of a hearing to consider an application for a variance, or a series of variances, to be in effect for a period of not more than 90 days, or an application for modification of a schedule of increments of progress:

(a) The hearing board shall serve a notice of the time and place of a hearing to grant such a variance or modification upon the air pollution control officer, all other districts within the air basin, the state board, the Environmental Protection Agency, and upon the applicant or permittee, not less than 10 days prior to such hearing.

(b) Subdivision (b) of Section 40823 shall not apply.

(c) In districts with a population of less than 750,000, the chairman of the hearing board, or any other member of the hearing board designated by the board, may hear such an application. If any member of the public contests a decision made by a single member of the hearing board, the application shall be reheard by the full hearing board within 10 days of the decision.

40826 30 DAY NOTICE - REGULAR VARIANCES

In case of a hearing to consider an application for a variance, other than an interim variance or a 90-day variance, or an application for a modification of a final compliance date in a variance previously granted, the notice requirements for the hearing shall be as follows:

(a) The hearing board shall serve a notice of the time and place of a hearing to grant a variance upon the air pollution control officer, all other districts within the air basin, the state board, the Environmental Protection Agency, and upon the applicant or permittee, not less than 30 days prior to the hearing, except as provided in subdivision (d).

(b) The hearing board shall also publish a notice of the hearing in at least one daily newspaper of general circulation in the district, and shall send the notice to every person who requests the notice, not less than 30 days prior to the hearing, except as provided in subdivision (d).

(c) The notice shall state the time and place of the hearing; the time when, commencing not less than 30 days, or, under subdivision (d), not less than 15 days, prior to the hearing, and place where the application, including any proposed conditions or schedule of increments of progress, is available for public inspection; and any other information that may be necessary to reasonably apprise the people within the district of the nature and purpose of the meeting.

(d) In districts with a population of 750,000 or less, the hearing board shall serve, publish, and send the notice pursuant to subdivisions (a) and (b) not less than 15 days prior to the hearing.

41509 POWER TO ABATE NUISANCE

No provision of this division, or of any order, rule, or regulation of the state board or of any district, is a limitation on:

(a) The power of any local or regional authority to declare, prohibit, or abate nuisances.

(b) The power of the Attorney General, at the request of a local or regional authority, the state board, or upon his own motion, to bring an action in the name of the people of the State of California to enjoin any pollution or nuisance.

(c) The power of a state agency in the enforcement or administration of any provision of law which it is specifically permitted or required to enforce or administer.

(d) The right of any person to maintain at any time any appropriate action for relief against any private nuisance.

41510 RIGHT OF ENTRY

For the purpose of enforcing or administering any state or local law, order, regulation, or rule relating to air pollution, the executive officer of the state board or any air pollution control officer having jurisdiction, or an authorized representative of such officer, upon presentation of his credentials or, if necessary under the circumstances, after obtaining an inspection warrant pursuant to Title 13 (commencing with Section 1822.50), Part 3 of the Code of Civil Procedure, shall have the right of entry to any premises on which an air pollution emission source is located for the purpose of inspecting such source, including securing samples of emissions therefrom, or any records required to be maintained in connection therewith by the state board or any district.

41700 PUBLIC NUISANCE

Except as otherwise provided in Section 41705, no person shall discharge from any source whatsoever such quantities of air contaminants or other material which cause injury, detriment, nuisance, or annoyance to any considerable number of persons or to the public, or which endanger the comfort, repose, health, or safety of any such persons or the public, or which cause, or have a natural tendency to cause, injury or damage to business or property.

41701 RINGELMANN / OPACITY STANDARDS

Except as otherwise provided in Section 41704, or Article 2 (commencing with Section 41800) of this chapter other than Section 41812, or Article 2 (commencing with Section 42350) of Chapter 4, no person shall discharge into the atmosphere from any source whatsoever any air contaminant, other than uncombined water vapor, for a period or periods aggregating more than three minutes in any one hour which is:

(a) As dark or darker in shade as that designated as No. 2 on the Ringelmann Chart, as published by the United States Bureau of Mines, or

(b) Of such opacity as to obscure an observer's view to a degree equal to or greater than does smoke described in subdivision (a).

42300 DISTRICT PERMIT SYSTEM

(a) Every district board may establish, by regulation, a permit system that requires, except as otherwise provided in Section 42310, that before any person builds, erects, alters, replaces, operates, or uses any article, machine, equipment, or other contrivance which may cause the issuance of air contaminants, the person obtain a permit to do so from the air pollution control officer of the district.
(b) The regulations may provide that a permit shall be valid only for a specified period. However, the expiration date of any permit shall be eligible for extension upon completion of the annual review required pursuant to subdivision (e) of Section 42301 and payment of the fees required pursuant to Section 42311, unless the air pollution control officer or the hearing board has initiated action to suspend or revoke the permit pursuant to Section 42304, 42307, or 42309, that action has resulted in a final determination by the officer or the board to suspend or revoke the permit, and all appeals have been exhausted or the time for appeals from that final determination has been exhausted.
(c) The annual extension of a permit's expiration date pursuant to subdivision (b) does not constitute permit issuance, renewal, reopening, amendment, or any other action subject to the requirements specified in Title V.

42301 REQUIREMENTS FOR PERMIT ISSUANCE

A permit system established pursuant to Section 42300 shall do all of the following:

(a) Ensure that the article, machine, equipment, or contrivance for which the permit was issued does not prevent or interfere with the attainment or maintenance of any applicable air quality standard.

(b) Prohibit the issuance of a permit unless the air pollution control officer is satisfied, on the basis of criteria adopted by the district board, that the article, machine, equipment, or contrivance will comply with all of the following:

(1) All applicable orders, rules, and regulations of the district and of the state board.

(2) All applicable provisions of this division.

(c) Prohibit the issuance of a permit to a Title V source if the Administrator of the Environmental Protection Agency objects to its issuance in a timely manner as provided in Title V. This subdivision is not intended to provide any authority to the Environmental Protection Agency to object to the issuance of a permit other than that authority expressly granted by Title V.

(d) Provide that the air pollution control officer may issue to a Title V source a permit to operate or use if the owner or operator of the Title V source presents a variance exempting the owner or operator from Section 41701, any rule or regulation of the district, or any permit condition imposed pursuant to this section, or presents an abatement order that has the effect of a variance and that meets all of the requirements of this part pertaining to variances, and the requirements for the issuance of permits to operate are otherwise satisfied. The issuance of any variance or abatement order is a matter of state law and procedure only and does not amend a Title V permit in any way. Those terms and conditions of any variance or abatement order that prescribe a compliance schedule may be incorporated into the permit consistent with Title V and this division.

(e) Require, upon annual renewal, that each permit be reviewed to determine that the permit conditions are adequate to ensure compliance with, and the enforceability of, district rules and regulations applicable to the article, machine, equipment, or contrivance for which the permit was issued which

were in effect at the time the permit was issued or modified, or which have subsequently been adopted and made retroactively applicable to an existing article, machine, equipment, or contrivance, by the district board and, if the permit conditions are not consistent, require that the permit be revised to specify the permit conditions in accordance with all applicable rules and regulations.

(f) Provide for the reissuance or transfer of a permit to a new owner or operator of an article, machine, equipment, or contrivance. An application for transfer of ownership only, or change in operator only, of any article, machine, equipment, or contrivance which had a valid permit to operate within the two-year period immediately preceding the application is a temporary permit to operate. Issuance of the final permit to operate shall be conditional upon a determination by the district that the criteria specified in subdivisions (b) and (e) are met, if the permit was not surrendered as a condition to receiving emission reduction credits pursuant to banking or permitting rules of the district. However, under no circumstances shall the criteria specify that a change of ownership or operator alone is a basis for requiring more stringent emission controls or operating conditions than would otherwise apply to the article, machine, equipment, or contrivance.

42303 INFORMATION DISCLOSURE

An air pollution control officer, at any time, may require from an applicant for, or the holder of, any permit provided for by the regulations of the district board, such information, analyses, plans, or specifications which will disclose the nature, extent, quantity, or degree of air contaminants which are, or may be, discharged by the source for which the permit was issued or applied.

42303.5 FALSE STATEMENTS

No person shall knowingly make any false statement in any application for a permit, or in any information, analyses, plans, or specifications submitted in conjunction with the application or at the request of the air pollution control officer.

42304 FAILURE TO SUPPLY INFORMATION

If, within a reasonable time, the holder of any permit issued by a district board willfully fails and refuses to furnish the information, analyses, plans, or specifications requested by the district air pollution control officer, such officer may suspend the permit. Such officer shall serve notice in writing of such suspension and the reasons therefor on the permittee.

42350 APPLICATIONS FOR VARIANCE

(a) Any person may apply to the hearing board for a variance from Section 41701 or from the rules and regulations of the district.

(b) (1) If the district board has established a permit system by regulation pursuant to Section 42300, a variance, or an abatement order which has the effect of a variance, may not be granted from the requirement for a permit to build, erect, alter, or replace.

(2) Title V sources shall not be granted a variance, or an abatement order which has the effect of a variance, from the requirement for a permit to operate or use.

(3) In districts with emission-capped trading programs, no variance shall be granted from the emission cap requirement.

42351 INTERIM VARIANCE APPLICATIONS

(a) Any person who has submitted an application for a variance and who desires to commence or continue operation pending the decision of the hearing board on the application, may submit an application for an interim variance.

(b) An interim variance may be granted for good causes stated in the order granting such a variance. The interim variance shall not be valid beyond the date of decision of the hearing board on the application of the variance or for more than 90 days from date of issuance of the interim variance, whichever occurs first.

(c) The hearing board shall not grant any interim variance (1) after it has held a hearing in compliance with the requirements of Section 40826, or (2) which is being sought to avoid the notice and hearing requirements of Section 40826.

42351.5 INTERIM SCHEDULE MODIFICATION

If a person granted a variance with a schedule of increments of progress files an application for modification of the schedule and is unable to notify the hearing board sufficiently in advance to allow the hearing board to schedule a public hearing on the application, the hearing board may grant no more than one interim authorization valid for not more than 30 days, to that person to continue operation pending the decision of the hearing board on the application. In districts with a population of less than 750,000, the chairman of the hearing board or any other member designated by the board may hear the application. If any member of the public contests such a decision made by a single member of the hearing board, the application shall be reheard by the full hearing board within 10 days of the decision. The interim authorization shall not be granted for a requested extension of a final compliance date or where the original variance expressly required advance application for the modification of an increment of progress.

42352 VARIANCE ISSUANCE REQUIREMENTS

(a) No variance shall be granted unless the hearing board makes all of the following findings:

(1) That the petitioner for a variance is, or will be, in violation of Section 41701 or of any rule, regulation, or order of the district.

(2) That, due to conditions beyond the reasonable control of the petitioner, requiring compliance would result in either (A) an arbitrary or unreasonable taking of property, or (B) the practical closing and elimination of a lawful business. In making those findings where the petitioner is a public agency, the hearing board shall consider whether or not requiring immediate compliance would impose an unreasonable burden upon an essential public service. For purposes of this paragraph, "essential public service" means a prison, detention

facility, police or firefighting facility, school, health care facility, landfill gas control or processing facility, sewage treatment works, or water delivery operation, if owned and operated by a public agency.

(3) That the closing or taking would be without a corresponding benefit in reducing air contaminants.

(4) That the applicant for the variance has given consideration to curtailing operations of the source in lieu of obtaining a variance.

(5) During the period the variance is in effect, that the applicant will reduce excess emissions to the maximum extent feasible.

(6) During the period the variance is in effect, that the applicant will monitor or otherwise quantify emission levels from the source, if requested to do so by the district, and report these emission levels to the district pursuant to a schedule established by the district.

(b) As used in this section, "public agency" means any state agency, board, or commission, any county, city and county, city, regional agency, public district, or other political subdivision.

42353 OTHER REQUIREMENTS

Upon making the specific findings set forth in Section 42352, the hearing board shall prescribe requirements other than those imposed by statute or by any rule, regulation, or order of the district board, not more onerous, applicable to plants and equipment operated by specified industry or business or for specified activity, or to the operations of individual persons. However, no variance shall be granted if the operator, under the variance, will result in a violation of Section 41700.

42354 PRESCRIBING REQUIREMENTS

In prescribing other and different requirements, in accordance with Section 42353, the hearing board, insofar as is consonant with the Legislature's declarations in Sections 39000 and 39001, shall exercise a wide discretion in

weighing the equities involved and the advantages to the residents of the district from the reduction of air contaminants and the disadvantages to any otherwise lawful business, occupation, or activity involved, resulting from requiring compliance with such requirements.

42355 HEARING BOARD BOND REQUIREMENTS

(a) The hearing board may require, as a condition of granting a variance, that a bond be posted by the party to whom the variance was granted to assure performance of any construction, alteration, repair, or other work required by the terms and conditions of the variance. The bond may provide that, if the party granted the variance fails to perform the work by the agreed date, the bond shall be forfeited to the district having jurisdiction, or the sureties shall have the option of promptly remedying the variance default or paying to the district an amount, up to the amount specified in the bond, that is necessary to accomplish the work specified as a condition of the variance.

(b) The provisions of this section do not apply to vessels so long as the vessels are not operating in violation of any federal law enacted for the purpose of controlling emissions from combustion of vessel fuels.

42356 HEARING BOARD VARIANCE MODIFICATION

The hearing board may modify or revoke, by written order, any order permitting a variance.

42357 HEARING BOARD REVIEW OF SCHEDULE

The hearing board may review and for good cause, such as a change in the availability of materials, equipment, or adequate technology, modify a schedule of increments of progress or a final compliance date in such a schedule.

42358 EFFECTIVE PERIOD OF ORDER

(a) The hearing board, in making any order permitting a variance, shall specify the time during which such order shall be effective, in no event, except as otherwise provided in subdivision (b), to exceed one year, and shall set a final compliance date.

(b) A variance may be issued for a period exceeding one year if the variance includes a schedule of increments of progress specifying a final compliance date by which the emissions of air contaminants of a source for which the variance is granted will be brought into compliance with applicable emission standards.

42359 PUBLIC HEARING REQUIREMENTS

Except in the case of an emergency, as determined by the hearing board, the hearing board shall hold a hearing pursuant to Chapter 8 (commencing with Section 40800) of Part 3 to determine under what conditions, and to what extent, a variance shall be granted.

42359.5 EMERGENCY VARIANCES

(a) Notwithstanding any other provision of this article or of Article 2 (commencing with Section 40820) of Chapter 8 of Part 3, the Chairman of a district hearing board, or any other member of the hearing board designated thereby, may issue, without notice and hearing, an emergency variance to an applicant.

(b) An emergency variance may be issued for good cause, including, but not limited to, a breakdown condition. The district board in consultation with its air pollution control officer and the hearing board may adopt rules and regulations, not inconsistent with this subdivision, to further specify the conditions, and to what extent, an emergency variance may be granted.

The emergency variance shall not remain in effect longer than 30 days and shall not be granted when sought to avoid the provisions of Section 40824 or 42351.

42360 COPY OF VARIANCE ORDER TO ARB

Within 30 days of any order granting, modifying, or otherwise affecting a variance by the hearing board, or a member thereof pursuant to Section 42359.5, either the air pollution control officer or the hearing board shall submit a copy of the order to the state board.

42361 VALIDITY OF VARIANCE TIME

Any variance granted by the hearing board of a county district or a unified district, or any member of such a hearing board pursuant to Section 42359.5, applicable in an area which subsequently becomes included within a regional district, including the bay district, shall remain valid for the time specified therein or for one year, whichever is shorter, or, unless prior to the expiration of such time, the hearing board of the regional district modifies or revokes the variance.

42362 VARIANCE REVOCATION OR MODIFICATION

The state board may revoke or modify any variance granted by any district if, in its judgement, the variance does not require compliance with a required schedule of increments of progress or emission standards as expeditiously as practicable, or the variance does not meet the requirements of this article.

42363 ARB HEARING PRIOR TO ACTION

Prior to revoking or modifying a variance pursuant to Section 42362, the state board shall conduct a hearing pursuant to Chapter 8 (commencing with Section 40800) of Part 3 on the matter. The person to whom the variance was granted shall be given immediate notice of any such hearing by the hearing board, and shall be afforded an opportunity to appear at the hearing, to call and examine witnesses, and to otherwise partake as if he were a party to the hearing.

42364 SCHEDULE OF FEES

(a) The district board may adopt, by regulation, a schedule of fees which will yield a sum not exceeding the estimated cost of the administration of this article and for the filing of applications for variances or to revoke or modify variances. All applicants shall pay the fees required by the schedule, including, notwithstanding the provisions of Section 6103 of the Government Code, an applicant that is a publicly owned public utility.

(b) All such fees shall be paid to the district treasurer to the credit of the district.

42400 GENERAL VIOLATIONS, CRIMINAL

(a) Except as otherwise provided in Section 42400.1, 42400.2, or 42400.3, or 42400.4 who violates this part, or any rule, regulation, permit, or order of the state board or of a district, including a district hearing board, adopted pursuant to Part 1 (commencing with Section 39000) to Part 4 (commencing with Section 41500), inclusive, is guilty of a misdemeanor and is subject to a fine of not more than one thousand dollars ($1,000) or imprisonment in the county jail for not more than six months, or both.

(b) If a violation under subdivision (a) with regard to the failure to operate a vapor recovery system on a gasoline cargo tank is directly caused by the actions of an employee under the supervision of, or of any independent contractor working for, any person subject to this part, the employee or independent contractor, as the case may be, causing the violation is guilty of a misdemeanor and is punishable as provided in subdivision (a). That liability shall not extend to the person employing the employee or retaining the independent contractor, unless that person is separately guilty of an action that violates this part.

(c) (1) Any person who knowingly violates any rule, regulation, permit, order, fee requirement, or filing requirement of the state board or of a district, including a district hearing board, that is adopted for the control of toxic air contaminants pursuant to Part 1 (commencing with Section 39000) to Part 4 (commencing with Section 41500), inclusive, and for which delegation or

approval of implementation and enforcement authority has been obtained pursuant to subdivision (l) of Section 112 of the Clean Air Act (42 U.S.C. Sec. 7412(l)), or the regulations adopted pursuant thereto, is guilty of a misdemeanor and is subject to a fine of not more than ten thousand dollars ($10,000) or imprisonment in the county jail for not more than six months, or both.

(2) Any person who knowingly makes any false material statement, representation, or certification in any form or in any notice or report required by a rule or regulation adopted or permit issued for the control of toxic air contaminants pursuant to Part 1 (commencing with Section 39000) to Part 4 (commencing with Section 41500), inclusive, and for which delegation or approval of implementation and enforcement authority has been obtained pursuant to subdivision (l) of Section 112 of the Clean Air Act (42 U.S.C. Sec. 7412(l)), or the regulations adopted pursuant thereto, or who knowingly renders inaccurate any monitoring device required by that toxic air contaminant rule, regulation, or permit is guilty of a misdemeanor and is subject to a fine of not more than ten thousand dollars ($10,000) or imprisonment in the county jail for not more than six months, or both.

(3) Paragraphs (1) and (2) apply only to violations that are not otherwise subject to a fine of ten thousand dollars ($10,000) or more pursuant to Section 42400.1, 42400.2, or 42400.3.

(d) The recovery of civil penalties pursuant to Section 42402, 42402.1, 42402.2, or 42402.3 precludes prosecution pursuant to this section for the same offense. When a district refers a violation to a prosecuting agency, the filing of a criminal complaint is grounds requiring the dismissal of any civil action brought pursuant to this article for the same offense.

(e) Each day during any portion of which a violation of subdivision (a) or (c) occurs is a separate offense.

42400.1 NEGLIGENCE, CRIMINAL

(a) Any person who negligently emits an air contaminant in violation of any provision of this part or any rule, regulation, permit, or order of the state board or of a district pertaining to emission regulations or limitations is guilty of a

misdemeanor and is subject to a fine of not more than fifteen thousand dollars ($15,000) or imprisonment in the county jail for not more than nine months, or both.

(b) Any person who owns or operates any source of air contaminant in violation of Section 41700 which causes actual injury, as defined in paragraph (2) of subdivision (d) of Section 42400.2, to the health or safety of a considerable number of persons or the public is guilty of a misdemeanor and is punishable as provided in subdivision (a).

(c) Each day during any portion of which a violation occurs is a separate offense.

(d) The recovery of civil penalties pursuant to Section 42402, 42402.1, 42402.2, or 42402.3, precludes prosecution pursuant to this section for the same offense. When a district refers a violation to a prosecuting agency, the filing of a criminal complaint is grounds requiring the dismissal of any civil action brought pursuant to this article for the same offense.

42400.2 DOCUMENT FALSIFICATION, CRIMINAL

(a) Any person who emits an air contaminant in violation of any provision of this part, or any order, rule, regulation, or permit of the state board or of a district pertaining to emission regulations or limitations, and who knew of the emission and failed to take corrective action within a reasonable period of time under the circumstances, is guilty of a misdemeanor and is subject to a fine of not more than twenty-five thousand dollars ($25,000) or imprisonment in the county jail for not more than one year, or both.

(b) For purposes of this section, "corrective action" means the termination of the emission violation or the grant of a variance from the applicable order, rule, regulation, or permit pursuant to Article 2 (commencing with Section 42350). If a district regulation regarding process upsets or equipment breakdowns would allow continued operation of equipment which is emitting air contaminants in excess of allowable limits, compliance with that regulation is deemed to be corrective action.

(c) Any person who, knowingly and with intent to deceive, falsifies any document required to be kept pursuant to any provision of this part, or any rule, regulation, permit, notice to comply, or order of the state board or of a district, is guilty of a misdemeanor and is punishable as provided in subdivision (a).

(d) (1) Any person who owns or operates any source of air contaminants in violation of Section 41700 which causes actual injury to the health or safety of a considerable number of persons or the public, and who knew of the emission and failed to take corrective action within a reasonable period of time under the circumstances, is guilty of a misdemeanor and is punishable as provided in subdivision (a).

(2) As used in this subdivision, "actual injury" means any physical injury which, in the opinion of a licensed physician and surgeon, requires medical treatment involving more than a physical examination.

(e) Each day during any portion of which a violation occurs constitutes a separate offense.

(f) The recovery of civil penalties pursuant to Section 42402, 42402.1, 42402.2, or 42402.3 precludes prosecution pursuant to this section for the same offense. When a district refers a violation to a prosecuting agency, the filing of a criminal complaint is grounds requiring the dismissal of any civil action brought pursuant to this article for the same offense.

42400.3 WILLFULLY EMITTING AN AIR CONTAMINANT

(a) Any person who willfully and intentionally emits an air contaminant in violation of any provision of this part or any rule, regulation, permit, or order of the state board or of a district, pertaining to emission regulations or limitations is guilty of a misdemeanor and is subject to a fine of not more than fifty thousand dollars ($50,000) or imprisonment in the county jail for not more than one year, or both.

(b) The recovery of civil penalties pursuant to Section 42402, 42402.1, 42402.2 or 42402.3 precludes prosecution pursuant to this section for the same offense. When a district refers a violation to a prosecuting agency, the filing of a criminal complaint is grounds requiring the dismissal of any civil action brought pursuant to this article for the same offense. (c) Each day during any portion of which a violation occurs constitutes a separate offense.

42401 VIOLATING ORDER OF ABATEMENT, CIVIL

Any person who intentionally or negligently violates any order of abatement issued by a district pursuant to Section 42450, by a hearing board pursuant to Section 42451, or by the state board pursuant to Section 41505 is liable for a civil penalty of not more than twenty-five thousand dollars ($25,000) for each day in which the violation occurs.

42402 GENERAL VIOLATIONS, CIVIL

(a) Except as otherwise provided in subdivision (b) or in Section 42402.1, 42402.2, or 42402.3, any person who violates this part, any order issued pursuant to Section 42316, or any rule, regulation, permit, or order of a district, including a district hearing board, or of the state board issued pursuant to Part 1 (commencing with Section 39000) to Part 4 (commencing with Section 41500), inclusive, is strictly liable for a civil penalty of not more than one thousand dollars ($1,000).

(b) (1) Any person who violates any provision of this part, any order issued pursuant to Section 42316, or any rule, regulation, permit, or order of a district, including a district hearing board, or of the state board issued pursuant to Part 1 (commencing with Section 39000) to Part 4 (commencing with Section 41500), inclusive, is strictly liable for a civil penalty of not more than ten thousand dollars ($10,000).

(2) (A) If a civil penalty in excess of one thousand dollars ($1,000) for each day in which the violation occurs is sought, there is no liability under this subdivision if the person accused of the violation alleges by affirmative defense and establishes that the violation was caused by an act which was not the result of intentional or negligent conduct.

(B) Subparagraph (A) does not apply to a violation of federally enforceable requirements that occur at a Title V source in a district in which a Title V permit program has been fully approved.

(C) Subparagraph (A) does not apply to a person who is determined to have violated an annual facility emissions cap established pursuant to a market-based incentive program adopted by a district pursuant to subdivision (b) of Section 39616.

(c) Each day during any portion of which a violation occurs is a separate offense.

42402.1 NEGLIGENCE OR ACTUAL INJURY, CIVIL

(a) Any person who negligently emits an air contaminant in violation of this part or any rule, regulation, permit, or order of the state board or of a district pertaining to emission regulations or limitations is liable for a civil penalty of not more than fifteen thousand dollars ($15,000).

(b) Any person who owns or operates any source of air contaminants in violation of Section 41700 which causes actual injury, as defined in paragraph (2) of subdivision (d) of Section 42400.2, to the health or safety of a considerable number of persons or the public is liable for a civil penalty as provided in subdivision (a).

(c) Each day during any portion of which a violation occurs is a separate offense.

42402.2 DOCUMENT FALSIFICATION, CIVIL

(a) Any person who emits an air contaminant in violation of any provision of this part, or any order, rule, regulation, or permit of the state board or of a district pertaining to emission regulations or limitations, and who knew of the emission and failed to take corrective action, as defined in subdivision (b) of Section 42400.2, within a reasonable period of time under the circumstances, is liable for a civil penalty, of not more than twenty-five thousand dollars ($25,000).

(b) Any person who, knowingly and with intent to deceive, falsifies any document required to be kept pursuant to any provision of this part, or any rule, regulation, permit, or order of the state board or of a district, is subject to the same civil penalty as provided in subdivision (a).

(c) Any person who owns or operates any source of air contaminants in violation of Section 41700 which causes actual injury, as defined in paragraph (2) of subdivision (d) of Section 42400.2, to the health or safety of a considerable number of persons or the public, and who knew of the emission

and failed to take corrective action, as defined in subdivision (b), of Section 42400.2, within a reasonable period of time under the circumstances, is subject to a civil penalty as provided in subdivision (a).

(d) Each day during any portion of which a violation occurs is a separate offense.

42402.3 CIVIL PENALTIES

Any person who willfully and intentionally emits an air contaminant in violation of any provision of this part or any order, permit, rule, or regulation of the state board, or of a district, pertaining to emission regulations or limitations, is liable for a civil penalty of not more than fifty thousand dollars ($50,000).

42402.5 ADMINISTRATIVE PENALTIES

In addition to any civil and criminal penalties prescribed under this article, a district may impose administrative civil penalties for a violation of this part, or any order, permit, rule, or regulation of the state board or of a district, including a district hearing board, adopted pursuant to Part 1 (commencing with Section 39000) to Part 4 (commencing with Section 41500), inclusive, if the district board has adopted rules and regulations specifying procedures for the imposition and amounts of these penalties. No administrative civil penalty levied pursuant to this section may exceed five hundred dollars ($500) for each violation. However, nothing in this section is intended to restrict the authority of a district to negotiate mutual settlements under any other penalty provisions of law which exceeds five hundred dollars ($500).

42403 RECOVERY OF CIVIL PENALTIES

(a) The civil penalties prescribed in Sections 39674, 42401, 42402, 42402.1, 42402.2, and 42402.3 shall be assessed and recovered in a civil action brought in the name of the people of the State of California by the Attorney General, by any district attorney, or by the attorney for any district in which the violation occurs in any court of competent jurisdiction.

(b) In determining the amount assessed, the court, or in reaching any settlement, the district, shall take into consideration all relevant circumstances, including, but not limited to, the following:

(1) The extent of harm caused by the violation.

(2) The nature and persistence of the violation.

(3) The length of time over which the violation occurs.

(4) The frequency of past violations.

(5) The record of maintenance.

(6) The unproven or innovative nature of the control equipment.

(7) Any action taken by the defendant, including the nature, extent, and time of response of the cleanup and construction undertaken, to mitigate the violation.

(8) The financial burden to the defendant.

42404.5 STATUTE OF LIMITATIONS FOR CIVIL ACTIONS

Any limitation of time applicable to actions brought pursuant to Section 42403 shall not commence to run until the offense has been discovered, or could reasonably have been discovered.

42450 ORDERS OF ABATEMENT

The district board may, after notice and a hearing, issue an order for abatement whenever it finds that any person is constructing or operating any article, machine, equipment, or other contrivance without a permit required by this part, or is in violation of Section 41700 or 41701 or of any order, rule, or regulation prohibiting or limiting the discharge of air contaminants into the air.

In holding such a hearing, the district board shall be vested with all the powers and duties of the hearing board. Notice shall be given, and the hearing shall be held, pursuant to Chapter 8 (commencing with Section 40800) of Part 3.

42700 MONITORING DEVICES

(a) The Legislature hereby finds and declares that stationary sources of air pollution are known to emit significant amounts of pollutants into the air, but that existing sampling techniques are not sufficiently precise to permit accurate measurement. The Legislature further finds and declares that more accurate data will improve the design of strategies for the control of pollutants in the most cost-effective manner.

(b) The Legislature further finds and declares that public complaints about excessive emissions from stationary sources are difficult or impossible to evaluate in the absence of adequate means of monitoring emissions on a continuing basis. The Legislature further finds and declares that, although the state board and the districts are authorized under Sections 41511 and 42303 to require stationary sources of air contaminants to install and operate monitoring devices to measure and record continuously the emissions concentration and amount of any specified pollutant, many districts have failed to exercise that authority.

(c) The Legislature further finds and declares that all districts, especially the bay district, the districts located, in whole or part, within the South Coast Air Basin, and the San Diego County Air Pollution Control District, should be encouraged to require that monitoring devices be installed in each stationary source of air contaminants that emits into the atmosphere 100 tons or more each year of nonmethane hydrocarbons, oxides of nitrogen, oxides of sulfur, reduced sulfur compounds, or particulate matter or 1,000 tons or more each year of carbon monoxide.

(d) The Legislature further finds and declares that, pursuant to Section 39616, the south coast district has required the installation of a substantial number of monitoring devices and the installation and use of strip chart recorders for

compliance purposes. However, electronic or computer data capture and storage is generally less costly and may have the capability to provide greater data availability with the same degree of security.

(e) To encourage the districts to take actions to monitor emissions of stationary sources as described in this section, the state board shall determine the availability, technological feasibility, and economic reasonableness of monitoring devices for those stationary sources as provided by Section 42701.

(f) To make emissions data available to the public and to minimize burdens on the private sector, the districts shall allow stationary sources the option of using electronic or computer data storage for purposes of compliance with Section 39616.

42701 AVAILABILITY, FEASIBILITY

(a) For the purposes of Sections 41511 and 42303, the state board shall determine the availability, technological feasibility, and economic reasonableness of monitoring devices to measure and record continuously the emissions concentration and amount of nonmethane hydrocarbons, oxides of nitrogen, oxides of sulfur, reduced sulfur compounds, particulate matter, and carbon monoxide emitted by stationary sources. Such determination shall be made for stationary sources which emit such contaminants in the quantities set forth in Section 42700, and may be made for stationary sources which emit lesser amounts. The state board shall complete an initial review of submitted devices by June 1, 1975.

42702 SPECIFICATION OF PROCESSES

The state board shall specify the types of stationary sources, processes, and the contaminants, or combinations thereof, for which a monitoring device is available, technologically feasible, and economically reasonable. Such specification may be by any technologically based classification, including on an industry-wide basis or by individual stationary source, by air basin, by district, or any other reasonable classification.

42703 REIMBURSEMENTS FOR TESTING EXPENSES

The state board shall require the manufacturer of any monitoring device submitted for a determination to reimburse the state board for its actual expenses incurred in making the determination, including, where applicable, its contract expenses for testing and review.

42704 DETERMINATION OF AVAILABILITY

After the state board has made a determination of availability, the state board may, as appropriate, revoke or modify its prior determination of availability if circumstances beyond the control of the state board, or of a stationary source required to install a monitoring device, cause a substantial delay or impairment in the availability of the device or cause the device no longer to be available.

42705 RECORDS

Any stationary source required by the district in which the source is located to install and operate a monitoring device shall retain the records from the device for not less than two years and, upon request, shall make the records available to the state board and the district. The district shall allow the source the option of using electronic or computer data storage, as defined in Section 40407.5 and consistent with Section 40440.3, as a method of record retention. The source shall not be limited solely to the installation or maintenance of strip chart recorders.

42706 REPORT OF VIOLATION

Any violation of any emission standard to which the stationary source is required to conform, as indicated by the records of the monitoring device, shall be reported by the operator of the source to the district within 96 hours after such occurrence. The district shall, in turn, report the violation to the state board within five working days after receiving the report of the violation from the operator.

42707 INSPECTION; FEES

The air pollution control officer shall inspect, as he determines necessary, the monitoring devices installed in every stationary source of air contaminants located within his jurisdiction required to have such devices to insure that such devices are functioning properly. The district may require reasonable fees to be paid by the operator of any such source to cover the expense of such inspection and other costs related thereto.

42708 POWERS OF LOCAL OR REGIONAL AUTHORITY

This chapter shall not prevent any local or regional authority from adopting monitoring requirements more stringent than those set forth in this chapter or be construed as requiring the installation of monitoring devices on any stationary source or classes of stationary sources. This section shall not limit the authority of the state board to require the installation of monitoring devices pursuant to Chapter 1 (commencing with Section 41500).

600 BOILER INSPECTION

There are several ways that the compliance status of a source can be evaluated:

- Inspections
- Continuous emission monitoring
- Engineering evaluations
- Source testing

Compliance Status

Inspections are addressed in this chapter. Continuous emission monitoring was discussed in Section 400. Engineering evaluations and source testing procedures are beyond the scope of this manual.

The following procedures will give you a general description of how to inspect the boilers typically found in California. Remember, this section is only an outline to provide you with guidance on how to conduct the inspection and what to look for. You should place a current copy of your applicable district rules in the appendix of this manual for easy reference. Refer to your rule for specific requirements for which compliance must be determined. The Permit to Operate for each boiler will also have specific requirements.

It is important to remember that you represent your agency and have responsibilities and liabilities. Be sure to follow your agency's policies.

601 INSPECTION OVERVIEW

The primary **goal of an inspection** is to minimize air pollution by promoting adherence to regulations and permit conditions. An inspection provides data for determining the boiler's compliance status, helps identify sources of violations, and provides information about the underlying causes of excess emissions. These underlying causes may be used in negotiations with operators or in support of enforcement actions. An inspection also provides a stimulus to the regulated industry to comply by demonstrating the control agency's determination to ensure continuous compliance.

Inspections by air pollution control agencies may be for any one of several reasons, such as: compliance determination, complaint investigation, source plan approval, permit review or renewal, or special studies. Examples of special studies would be operating and maintenance evaluations, or updating emission inventories.

600 BOILER INSPECTION

Compliance Inspection

The type and purpose of the inspection will determine:

- the extent of **preparation** for the inspection
- whether or not the inspection is **announced**
- the **effort** and/or time required for conducting it

Compliance-type inspections provide preliminary emissions assessments only, since source testing (Figure 601.1) is the definitive measure for determining compliance with the emission standard. These inspections should usually be unannounced so that the plant can be evaluated under its normal operating

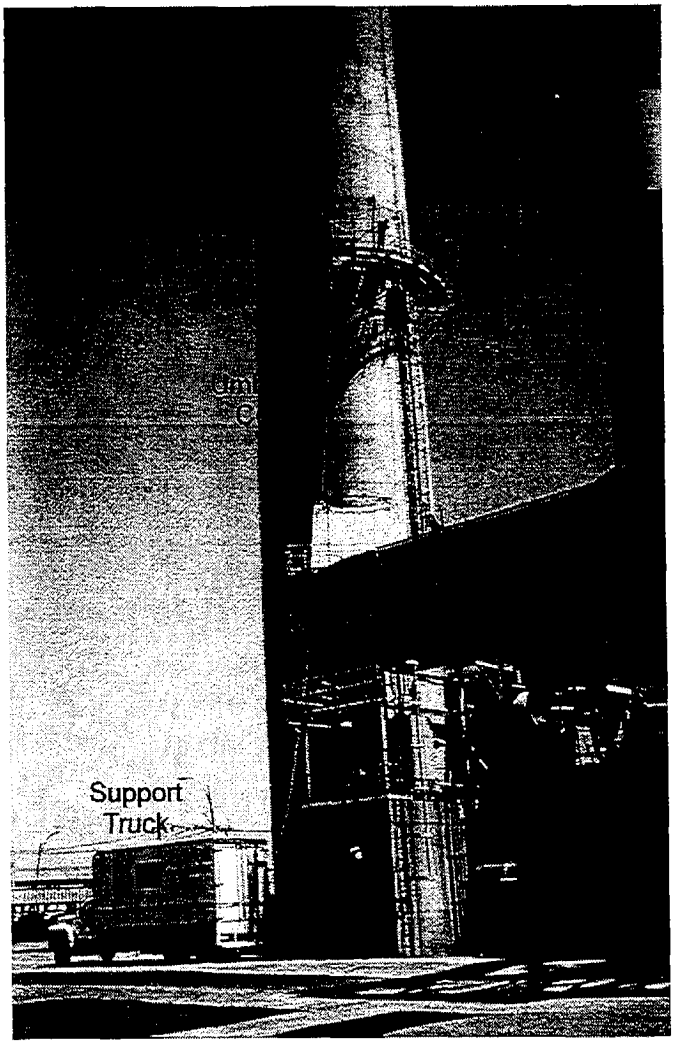

Figure 601.1
Source Testing

conditions. Pollution control equipment, continuous monitors, visible emissions, and the fuel can be observed during an unannounced inspection. Compliance inspections often provide an accurate picture of boiler operations, provided there are no access problems or faulty and/or inoperative equipment. This manual primarily addresses compliance type inspections.

Baseline Inspection

The plant should be given sufficient advance notice for **baseline-type inspections** pertaining to source construction, plan approval, or development of the Permit to Operate. This will allow qualified plant personnel to be present and to provide the drawings, manuals, and process information that may be required. Prior notice should also be given when performing inspections for special studies designed to document operating and maintenance practices, or process and emission data. This will allow the operator time to provide information such as fuel rates and stack test results. Regardless of the type of inspection, pertinent information will be obtained **prior** to, **during**, and **following** the boiler evaluation.

601.1 LEVELS OF INSPECTION

Level 2 Inspection

Four different levels of inspection have been developed by the USEPA. A level 1 inspection consists of an inspection that is the least in-depth and a level 4 inspection is the most in-depth. The levels are inclusive; a level 3 inspection, for example, would also include all the items done in a level 1 and level 2 inspection. Although these levels may not always be strictly adhered to, they help organize the different ways a facility can be inspected. In a level 1 inspection, an inspector conducts a visible emissions evaluation outside the facility and looks for new construction, obvious modifications, etc. In a level 2 inspection, an inspector conducts a walk through evaluation of the system and process equipment. All the data acquired in a level 2 inspection is acquired from on-site gauges. In a level 3 inspection, independent measurements of operating conditions separate from the existing on-site gauges are conducted. This is usually done when the existing on-site gauges are inadequate. A level 4 inspection is performed by agency supervisors or senior inspectors to acquire baseline data (normal operating conditions data). As with the level 3 inspection, independent monitoring equipment is used for the level 4 inspection. The "baseline" data acquired in past level 4 inspections is used by inspectors to check the operation of the equipment as it compares with past operation. This manual refers primarily to the level 2 inspection but recommends a few additional tests which might otherwise be reserved for level 3 or 4 inspections.

602 PRE-INSPECTION PROCEDURES

The objective of a compliance inspection is to determine a facility's compliance with district regulations and with the boiler's Permit to Operate. It is important to **prepare** for the inspection prior to your visit to the site.

602.1 FILE REVIEW

Preparation

Prior to the site inspection, the inspector should **review** all information available in the **district source files** including:

- permit applications,
- approved permits,
- equipment lists,
- conditions for each permit,
- previous inspection reports,
- notices of violation,
- breakdown reports,
- enforcement actions taken,
- complaints,
- variance histories,
- alternative emissions control plans,
- abatement orders,
- source tests,
- processes involved at the facility, and
- emissions inventory.

The inspector is advised to complete some portions of the inspection documentation before arriving at the facility, as this will save time during the pre-inspection meeting. If your district has checklists or rule specific forms, use them.

Inspection Forms

The inspector should be familiar with the type of inspection form used in his/her department and should remember to fill out the forms in an accurate and clear manner with a dark pen. The inspection forms are often entered as evidence in legal actions against the facility or are obtained by the opposition through the discovery process. The forms should reflect the care with which the inspector has conducted the investigation.

602.2 REGULATION REVIEW

You should review any references to the specific rules which are noted in the source files. In particular be familiar with each standard and exemption in the rule. Discuss the regulation with experienced personnel and review any district policies that may apply. Make sure that you receive consistent interpretations on how to apply the requirements of the rule.

602.2.1 Rule Exemptions

Check for rule exemptions. Record the **date the boiler was built or last modified** and compare it to the regulatory exemption dates. This is likely to be a critical piece of information for determining what the emissions limits are. This date will also help confirm what auxiliary equipment was required under the Best Available Control Technology (BACT) rule at the time of construction. In general, BACT requirements are included as a part of the permit conditions.

Record the **rated Btu input** for the boiler and compare it to the regulations. Emission limits and auxiliary equipment requirements are usually determined by the heat input capacity of the boiler.

Note the date of the last source test and the test results. Also determine the required testing frequency. Annual testing is most common but quarterly or biannual testing is sometimes prescribed. The test history, depending on whether it is good or marginal, will help you to decide when another source test may be recommended. For comparison, list the applicable emission limits according to your district's regulations and the Permit to Operate. If the source gave marginal results for one or more pollutants, you may wish to make use of portable test equipment for a rough evaluation.

Study the Source

Determine the limit allowed for **sulfur in the fuel** and note whether a continuous sulfur or H_2S monitor is required.

Examine the Permit to Operate for specific **equipment requirements** such as low-NOx burners or SCR, etc. The permit also may have requirements related to 1) an ammonia injection system for SCR and SNCR systems and 2) the operating temperature of the NOx reduction unit. Continuous emissions monitors for NOx, SOx, CO, etc. may also be required.

602.3 EQUIPMENT CHECK

Make sure that you have the following safety equipment available for use during the inspection:

- vision protection - safety glasses with side shields, goggles, or face shield
- hearing protection - ear plugs or ear muffs
- safety shoes or boots
- hard hat
- gloves
- fire retardant clothing (e.g. Nomex), if required
- air purifying respirator
- an SCBA (self contained breathing apparatus) may also be required if sampling sour gases.

Equipment Checklist

Identification, business cards, pens, wipes, inspection forms, and hydrogen sulfide detector ampules should also be available. Optional equipment might include a Draeger test pump with detector tubes, or portable analyzers for NOx, SOx, CO, O_2, H_2S and hydrocarbons. Fuel samples will require the appropriate sample container (gas cylinder, bottle, or can), adaptor fittings, and chain of custody forms. Welder's lenses may help for viewing flame and burner characteristics.

602.4 PRE-ENTRY AND ENTRY

When you arrive at the plant, observe the facility from the outside. Note any odors or visible emissions and note the size and layout of the facility. A drive around the perimeter may be useful. Enter the facility through the normal public access and request to see the previous contact person mentioned in the files. Depending on the facility, this may be the environmental coordinator, production manager, supervisor, president, operator, or maintenance worker. Always present your business credentials immediately to avoid confusion.

If the source is unfamiliar with your district's authority, be prepared to cite and provide copies of California Health & Safety Code (CHSC) Section 41510: Right of Entry, and Section 42303: Information Required and any applicable district rules. Know and follow your district's policy if the facility refuses entry.

602.5 PRE-INSPECTION MEETING

Before an inspection tour begins, you (the inspector) should meet with the source representative to obtain operating information. You should state the purpose of the inspection and identify the equipment and processes which will be inspected. The scope of the inspection can be expanded later if problems or discrepancies are found. Facility and equipment information can be verified during this meeting. Record the contact name, title and phone number, as well as the date and time. Discuss safety procedures and whether or not there are currently any abnormal operations, maintenance, or other concerns. Any items noted in the perimeter observations (such as odors, visible emissions, construction, etc.) should also be discussed.

If you have not already reviewed permits in the pre-inspection, you should request to see a copy of the permit(s) for the facility and check to see if the permit(s) is current and valid. Also, check existing permit conditions and ask if any changes have been made to the operation which are not reflected in the permit.

603 FACILITY INSPECTION PROCEDURES

603.1 CHECK-IN WITH THE UNIT OPERATOR

If visible emissions or odors were noted in your overview of the facility, you may wish to investigate them first. Otherwise, proceed to the unit and follow proper check-in procedures. These procedures always require that you obtain permission to enter the unit from the operator in charge, who can usually be found by reporting to the control room. In almost all cases, the district inspector will be accompanied by a representative of the company who will follow these procedures. However, you should be aware of their procedures and be sure they are followed. **Check-in with the unit operator is extremely important to your safety.**

Notify the Boiler Operator

The inspection is performed by checking the Permits to Operate for each permitted item and making sure the equipment is being operated in accordance with permit conditions and district regulations. Permits must be posted or otherwise available for inspection and they must be current. When you inspect the equipment, check for consistency with the list of equipment in the Permit to

Operate and check that it has not been altered since the last Permit was issued. Check maintenance records for the unit. Replacement equipment and parts should coincide with the Permit and rule requirements.

A common alteration which can be easily verified is the replacement of original equipment with that of a higher horsepower rating. Horsepower ratings of pump and compressor drivers are normally included on the Permit. If equipment has been modified, look to see if there is an Authority to Construct. A Notice of Violation may have to be issued if procedures regarding Permits are not followed.

Photography

Photographic equipment is very helpful in documenting a violation. In addition to still photographic film, a videotape can give the parties involved in a disputed case an overall view of the facility as well as zero in on the piece of equipment being documented in a violation. A log on the videotape and any photographs taken should be kept so that the date, time, location of inspector, company name, and relevancy of the picture are documented. A numbering system should be used to link the picture and the log. Additionally, information such as the serial number of the camera, type of film used, the exposure setting, weather conditions and lighting, the type and length of lens, who witnessed the photography and where the film was developed and printed is useful and can be easily recorded in the inspector's diary.

Operations Data

604 VERIFY FUEL TYPE

Verify with the operator the type of fuel being used to fire the boiler. This is likely to be a permit requirement. Looking at the burner flame through the observation door can also be used to determine that natural gas is being burned, as opposed to solid or liquid fuels. Although this is not a definitive test, you will soon learn to distinguish the translucent blue and yellow flame of natural gas from the intense yellow flame of liquid and solid fuels.

Fuel verification is especially important for **biomass** burning facilities. Furnaces approved for burning tree prunings or wood wastes, for example, may not be capable of safely incinerating household or industrial wastes. And yet there can be significant financial incentive to try to burn these wastes along with the Permitted fuels.

Verify Fuel

Take a walk around the fuel supply piles and note any odors or odd materials. Take fuel samples if necessary. Be on the lookout as you tour the rest of the plant, for piles of debris or trash which could potentially be incinerated in the biomass boiler. Observe as the fuel is being introduced to the boiler and look for signs of non-permit materials.

605 INSPECTION OF NO_x CONTROL EQUIPMENT

Many recently constructed or modified boilers are equipped with continuous emission monitors for NOx (Figure 605.1 for example). This may simplify the inspection considerably. The inspector can verify that the emission concentration in the stack gas is within limits. He/she may also check that the instrument is being calibrated regularly as required. It is a mistake, though, to rely blindly on the CEM. Inspectors should confirm that pollution control devices are in place, and operating within design parameters.

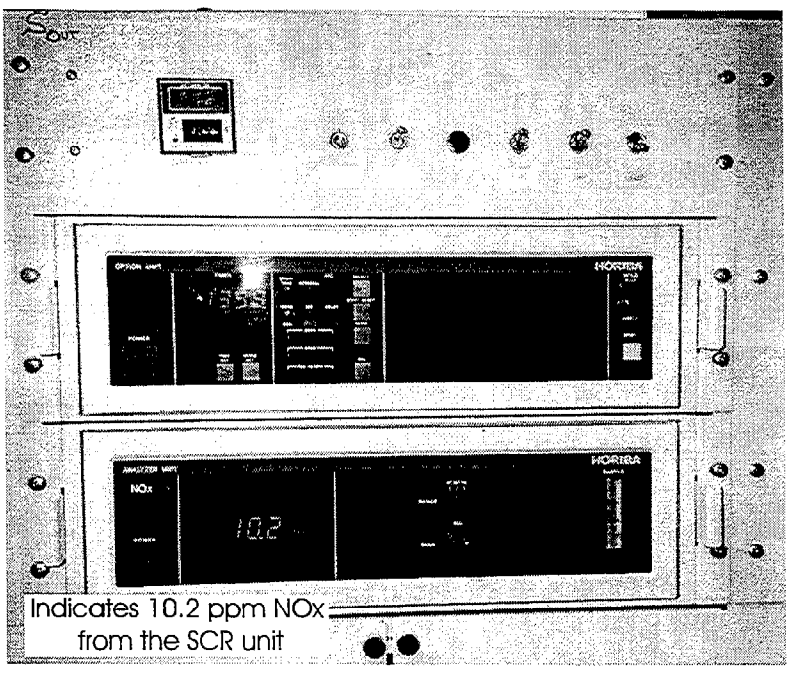

Figure 605.1
CEM for NOx

Portable Analyzers

If a NOx monitor is not installed, it is usually not possible to directly determine NOx emissions unless a source test is conducted. Increasingly, boilers are being required to have heat-traced sample lines from the stack to the ground. These will allow the use of portable analyzers to confirm emission levels. Direct measurement of emissions is, of course, the most effective method of compliance verification.

Often, the best an inspector can do is to verify that the equipment is in operation and is installed properly. Some suggested procedures for this follow.

605.1 LOW EXCESS AIR OPERATION

At normal boiler operation levels of 2% to 6% oxygen in the stack gas, it has been found that the formation of NOx is proportional to the excess oxygen. Higher levels of oxygen mean that more oxygen is available for NOx formation. Decreasing the stack gas oxygen from 5% to 3% will usually reduce NOx formation by 10% to 15%. Several California districts have now promulgated rules which require larger facilities to operate at 3% oxygen or below. Also, some Permits to Operate specify a limit on oxygen in the stack gas.

Check the Permit and rules for the 3% oxygen limitation. Even if no limit applies, note the historical values for stack gas oxygen. This is a key operating parameter indicating the efficiency and health of the boiler.

Oxygen in the Stack Gas

Almost every boiler, except for the smallest types, will have an oxygen (O_2) meter on the stack. Record the oxygen reading and compare to historical or baseline values. Notify the operator and investigate further if the oxygen reading is significantly higher than past values. Also question the validity of very low oxygen values. It is extremely difficult to operate a boiler at levels of about 1% or below without a smoking stack. This smoke limitation will occur at higher oxygen levels depending on the boiler and the fuel type.

605.2 FLUE GAS RECIRCULATION (FGR) INSPECTION

Identify the FGR duct work (large boilers) or piping (smaller boilers) which will normally start at the base of the stack, run down to a fan, and then into the windbox near the burner (Figure 605.2). Note any signs of degeneration, especially corrosion, cracked and worn expansion joints in the duct work, or excessive vibrations from the fan.

FGR

Confirm that the FGR system is in operation. The main valves should be in the open position, leaving a clear path for the recirculated flue gases. The fan motor should be spinning. The shaft between motor and fan is usually visible. The vibration and heat of the motor will also indicate its operation. If a temperature gauge is installed in the FGR duct, it should indicate the flue gas temperature of several hundred degrees Fahrenheit or more. A much lower temperature would indicate that there is no flow.

A flow meter is often installed in the FGR duct so that the optimum flue gas recirculation rate (usually 10% to 15% of total flue gas) can be maintained. This recirculation rate should be proportional to the fuel supply rate. Compare to historical values.

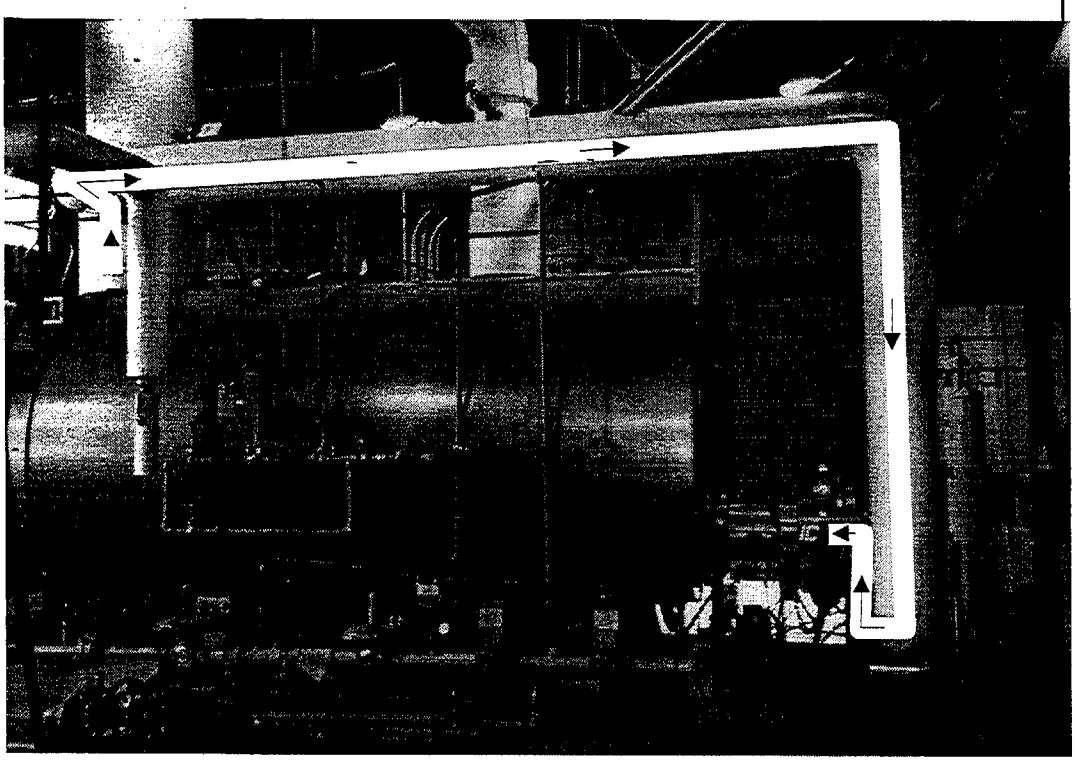

Figure 605.2
Flue Gas Recirculation (FGR)

One manufacturer of firetube boilers has a low emission option which packages induced flue gas recirculation within the front head. The front head routes the flue gases from near the outlet to the fan and burner assembly. This option does not require external piping for field installation. A flow meter, when installed in the FGR duct, can see recirculation rates of 15% to 50% of total flue gas.

FGR Flow Rate

605.3 INSPECTION OF LOW-NOX BURNERS

If low-NOx burners are required in the Permit to Operate, record the manufacturer and model number of the burners if it is available. Most low-NOx burners will be staged fuel type with two or more fuel inlets, so you should attempt to become familiar with the piping arrangement and air registers. With practice you should be able to differentiate between a conventional pre-mix type burner and a low-NOx burner by looking and asking the appropriate questions. Figure 605.3 shows a low-NOx burner system.

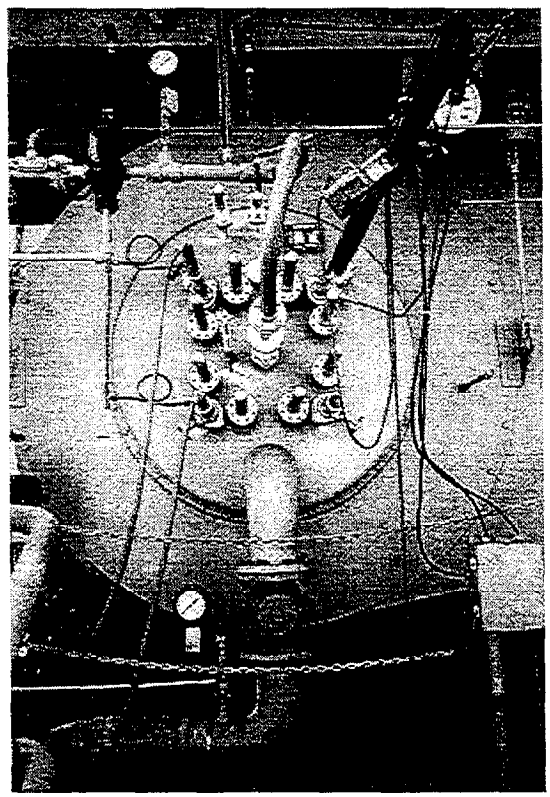

Figure 605.3
Low-NOx Burner System

Using proper precautions, a look inside the fire box through the observation door(s) or window(s) will also be instructive (Figure 605.4). This is a common procedure when a boiler is being started up, tuned, or checked to see that each burner is firing properly. The **operator** should make a safety check, and the operator should open the observation door.

Firebox Observation

Negative pressure fireboxes will normally have several small doors for viewing the flames. Before opening the observation door on a negative pressure firebox, the operator should first check the draft gauges (Figure 605.5) to be sure that the firebox pressure is indeed negative. A positive pressure would result in hot gases or flames coming out as the door is opened. Normal pressure might be -0.25 to -0.5 inches of water. The operator might then open the door slowly while protecting himself behind the hinge side of the door. At this point, it is usually safe to look well into firebox at the flames, burners, tubes and refractory. Some facilities may require face shields. Welder's goggles can also be helpful for discerning the shape of bright flames.

CAUTION WHEN OPENING OBSERVATION DOOR
1. DO NOT STAND IN FRONT OF DOOR TO OPEN
2. USE FACE SHIELD TO OBSERVE FLAME.
3. MAKE SURE THAT LATCH HANDLE IS SECURE WHEN DOOR IS CLOSED

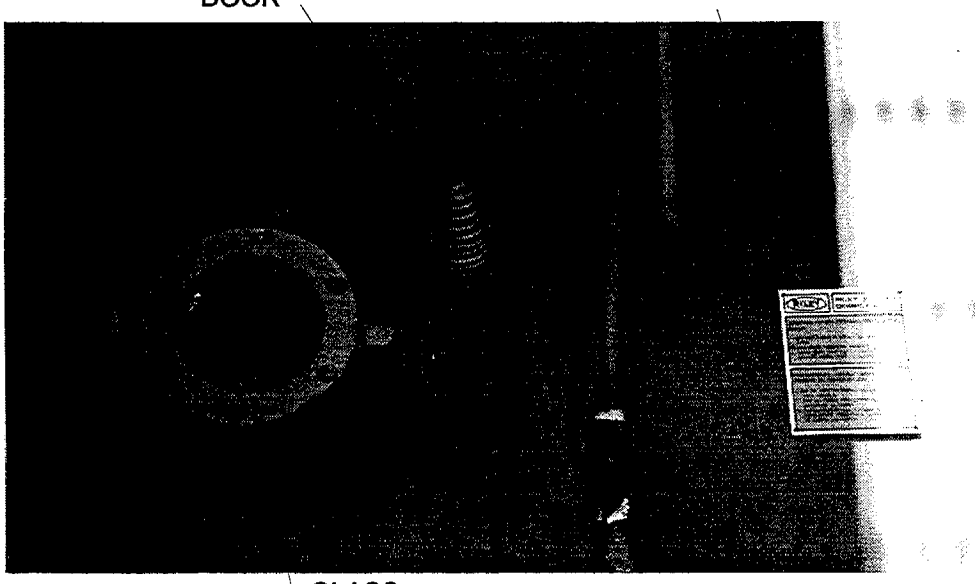

Figure 605.4
Flame Observation Window

Flames from a **pre-mix burner** with plenty of air are generally short and compact and quite blue. **Low-NOx burners** may have a longer, lazier, blue and yellow flame. The second stage fuel tip can often be seen as the source of a smaller flame located near the edge of the main burner tip. Fuel oil and diesel usually burn with very bright yellow flames which may be difficult to look at without the help of welder's lenses. Oil flames can often be differentiated from gas flames by the intense yellow light. Use common sense and do not stare at the brightness for too long.

Positive pressure fireboxes will normally have glass windows, perhaps protected by an internal metal door. Viewing through these will normally require fewer safety precautions, but the inspector must still be very aware of the surroundings.

Flame Types

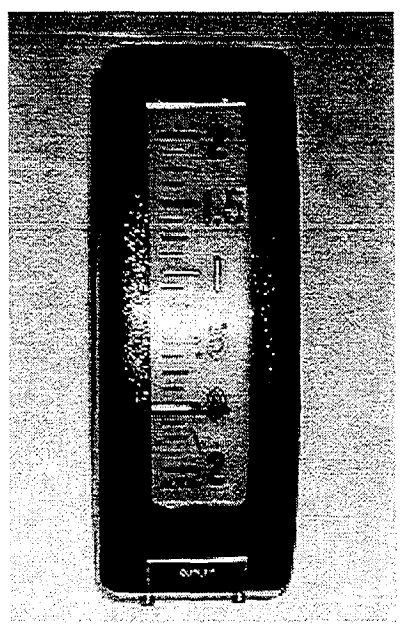

Figure 605.5
Firebox Draft Gauge
The pressure is zero. Is this boiler in operation?

605.4 SELECTIVE CATALYTIC REDUCTION (SCR) OF NOX

If the boiler is equipped with SCR, begin with an overall scan of the equipment. Recent boiler constructions will normally have the SCR unit installed at the base of the stack. Retrofits may have the unit located near the ground with duct-work to route the stack gases through it. Especially with retrofit equipment, verify that the unit is not being bypassed by observing the position of all dampers in the duct-work. Verify that all Permit conditions are being met.

Record the operating temperature of the unit and verify that it is within the recommended range (typically this is somewhere between 400 °F and 1000 °F.) If the operating temperature is not within the prescribed range, attempt to determine why not. Follow up on this question by talking to the manufacturer, fellow inspectors, district engineers, etc.

When was the catalyst last replaced? One drawback of the SCR system is that the catalyst loses reactivity over time and eventually must be replaced. Catalyst grids over 5 years old should be evaluated closely.

605.4.1 Ammonia Injection Systems

Operating Temperature

Check to see that the ammonia injection system is intact and confirm that ammonia is being injected into the system (Figure 605.6). This may require the assistance of an operator. Record the injection rate or record the injector setting for future reference. If instrumentation has been provided to analyze for ammonia slip, record the slip.

Anhydrous ammonia systems will normally have a vaporizer. As the ammonia vaporizes at a low pressure, it cools rapidly. A vaporizer which is in operation will be cold and usually have condensate or ice on the piping. A vaporizer at ambient temperature is probably not in operation. Sometimes the vaporizer may be equipped with an electrical or a steam heater.

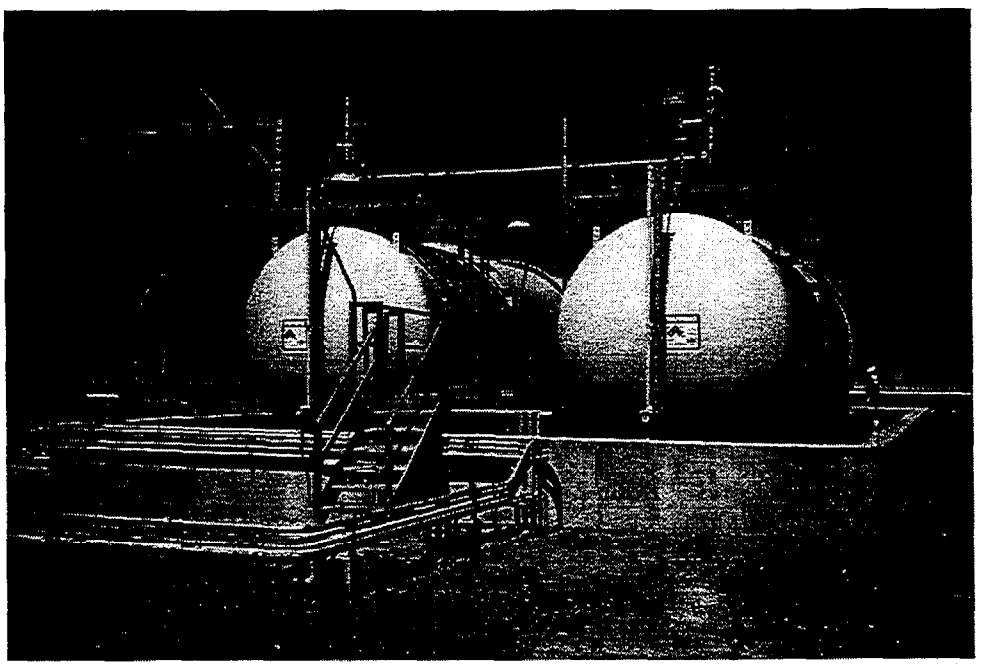

Figure 605.6
Ammonia Storage Facilities for Large Power Plant with SCR

605.5 SELECTIVE NON-CATALYTIC REDUCTION (SNCR) OF NOX

Ammonia Consumption

Check to see that ammonia or urea is being injected into the system (Figure 605.7), then record the rate or record the injector setting for future reference. If instrumentation has been provided for ammonia slip, record the slip. Record the operating temperature at the point of injection and verify that it is within the recommended range (typically this is somewhere between 1400 °F and 1900 °F.)

605.6 FLUIDIZED-BED COMBUSTION

SNCR

Note any excessive odors in the area, especially those which can still be detected a short distance downwind of the unit. A fluidized-bed which burns petroleum coke can be a smelly unit and some experience will be required to determine when a problem may have occurred. Use caution if you attempt to sniff out odor sources.

Figure 605.7
Ammonia Supply Pump Indicator Light

Record the fuel type and feed rate, the sulfur content of the fuel and the nitrogen content. Compare with any limits found in the Permit or in the regulations. Record the air supply rate, and the concentrations of CO_2, CO, and O_2 in the off-gas. Also record the rate of addition of limestone or sand and the recirculation rate. And most important to the formation of NOx, record the temperature(s) in the fluidized bed. Compare to historical or baseline values. If the unit is equipped with a continuous emission monitor, record the levels of NOx and SOx in the stack effluent and compare with Permit levels.

Odors

Inspect particulate and sulfur control facilities as noted in the following sections. If other low Btu or waste materials are being incinerated in the boiler, check the Permit conditions for this operation?

606 SULFUR OXIDE (SOX) EMISSION INSPECTION

Many boilers which burn sulfur-prone fuels are equipped with continuous emission monitors for SOx. The inspector can verify that the emission concentration in the stack gas is within limits. He/she should also check that the instrument is being calibrated regularly as required (See Section 405.1).

If a SOx monitor is not installed, it may still be possible to determine SOx emissions. Increasingly, boilers are being required to have heat-traced sample lines from the stack to the ground. These will allow the use of portable analyzers to confirm emission levels.

SOx emissions can also be estimated if the sulfur content of the fuel is known. In many cases, almost all of the sulfur that comes in with the fuel will go out the stack as SO_2.

606.1 SULFUR CONTENT OF FUEL

Fuels such as natural gas, LPG, kerosene (fuel oil #1), or diesel (fuel oil #2) normally have low or insignificant levels of sulfur in California. Verify this by examining the specification sheet provided at the time of fuel delivery or sale. A continuous emission monitor for SOx would normally not be required when burning solely these fuels.

Other fuels such as heavier fuel oils, coal, petroleum coke, and some biomass fuels will contain varying amounts of sulfur. Because the sulfur level can vary with each batch or delivery, examine the sulfur analysis result for each delivery. Many facilities which burn these fuels are also required to have CEMs and SOx pollution control equipment.

Fuel Sulfur

If there is any reason to doubt the sulfur content of a fuel (such as sulfurous odors), take a sample for later lab evaluation. Be sure to use the proper sample container, sampling method, and chain of custody procedures.

606.2 WET SCRUBBER INSPECTION

A more complete discussion of the inspection of scrubbers can be found in the CARB technical manual VOC Control Devices / Scrubbers, published by the Compliance Assistance Program.

606.2.1 Physical Condition of Scrubber

Walk around the system looking for signs of degeneration, especially corrosion. The liquids used in the scrubber system can be very corrosive and damaging. Look for cracked or worn expansion joints in the duct work, sagging piping, and piping that cannot be drained or flushed (dead end piping is especially susceptible to corrosive failure). Corroded or worn equipment is an indication of poor maintenance and possible violations. Note any fugitive emissions from cracks or holes in the equipment. These will require a proper visible emissions evaluation.

Corrosion

Note any excessive vibrations from fans and pumps. Rotating equipment is especially susceptible to corrosion and erosion by the absorbent slurries and solutions.

606.2.2 Droplet Entrainment

Look for a rain-out of droplets in the immediate vicinity of the stack. A very light rain-out of droplets in the air around the stack may be normal, but the ground around the stack should not be wet. Droplet fallout can create a local nuisance. Excessive emission of droplets often indicates a problem with the demister.

Rain-Out

Check for moisture stains or discoloration on the stack and any adjacent equipment. Look around the top of the stack for the existence of a "mud lip." Stains, discolorations, or a mud lip also may be an indication of a demister problem.

606.2.3 Static Pressure Drop Across the Scrubber

The pressure drop through a scrubber can be determined by comparing the pressure gauge readings from upstream of the scrubber to downstream. In some cases a differential pressure gauge may be installed to measure the pressure drop. Compare the reading with the baseline or historical values of the pressure drop. Normal pressure drops for a tray tower might be from 2 to 12 psi; for a venturi tower 10 to 120 psi; and for a spray tower only a few psi. Low pressure drops could be caused by low gas flow rates, low liquor flow rates, or collapsed trays. High pressure drops could be caused by high gas flow rates, high liquor flow rates, plugged trays, or a partially plugged venturi throat.

Pressure Drop

The pressure gauges on the scrubber should be in good working order and free of deposits and grime. If it seems that the gauge is not working properly, ask the operator to disconnect one of the lines leading to the gauge (if applicable) to see if the gauge responds properly.

606.2.4 Gas Outlet Temperature

Measuring the temperature of the outlet gas flow can help determine if the liquid-gas distribution is poor or if the liquid flow rate is inadequate. Gas temperatures over 10 °F above the baseline or historical values may indicate poor liquid-gas distribution or a low liquid flow (liquid to gas ratio is too low). Evaluating the temperature of the outlet gas stream may be part of a level 3 or 4 inspection, because the scrubber equipment may not be equipped with a temperature gauge on the outlet side.

606.2.5 Gas Flow Rate

The gas flow rate in a scrubbing system may change due to variations in the process conditions, but there is a range of recommended gas flow rates where the scrubber system should operate. Lower than recommended gas flow rates tend to cause poor distribution of the gas. The small gas stream may bypass the scrubbing liquor and reduce the gas/liquid contact. At higher than recommended gas flow rates, the gas can blow past the liquor and prevent good gas/liquid contact.

Flow Rate

A simple method of evaluating the gas flow rate is by checking the fan motor current. Record the fan motor current and compare it to any Permit conditions for the fan, and, if applicable, acquire copies of relevant fan motor records.

For a level 3 or 4 inspection, the common instrument used to measure the gas flow is an S-type Pitot tube. A safe port location must be located on the duct. USEPA Reference Methods 1 and 2 contain procedures for measuring the gas flow.

606.2.6 Liquor Inlet Pressure

Liquor Inlet

In most scrubbing systems, pressure gauges will be provided to indicate the pressure of the scrubbing liquid in the spray nozzle supply header. Record the reading on the gauge and compare it to the baseline value. If the pressure is lower than the baseline value, there may be erosion occurring in or around the nozzles. If the pressure is higher than normal, there may be one or more plugged nozzles. Both of these conditions will result in poor distribution of the liquid spray.

Pressure gauges for the headers are prone to giving inaccurate readings. The gauges are vulnerable to corrosion and clogging from solids deposits. Other data such as the pump discharge pressure and the outlet gas temperature should be checked to verify a low or high pressure reading.

606.2.7 Liquor pH

Locate the pH meter or meters for the scrubbing system; one is usually located in the recirculation tank or on the scrubbing liquor outlet lines from the scrubber. Make sure the meter is working properly by reviewing the calibration records: It may be possible to witness the calibration of the meter. Record the indicated pH and compare with the baseline pH value or Permit limits.

Liquor Properties

Review the records for the pH meter. If the scrubber has a pH meter on the inlet side and outlet side, the pH indicated on the meters should normally decrease between 0.5 to 2.0 pH units. This is from the absorption of sulfur dioxide, carbon dioxide and other acid gases in the gas stream. All the pH meters should generally read between 5.5 and 10.0.

The pH of the scrubbing liquid can also be determined by acquiring a sample and using a portable pH meter. Warm up the pH meter before the sample is taken. It's best to measure the pH of the liquor as soon as possible after sampling, since chemical reactions in the liquid could alter its pH.

606.2.8 Liquor Recirculation Rate

Check the flow rate of the liquor into the scrubber. A common cause of excess emissions from a scrubber is an inadequate liquor flow rate. Be aware that the flow meter measuring the recirculation rate is prone to failure and inaccuracy due to erosion and corrosion. Compare flows with the baseline value or Permit.

pH

Many small-sized scrubbing systems are not equipped with flow meters, but you may still be able to evaluate the flow. Check the pump discharge pressure; if it is higher than normal, this can indicate plugging and a lower flow rate. The temperature of the exiting gas stream can also be checked. Higher than normal temperatures in the exiting gas stream indicate lower liquor flows. Compare results to Permit and baseline values.

606.2.9 Demister Inspection

If a rain-out of droplets has occurred, the demister should be inspected. If the demister has pressure gauges, record the pressure drop. An excessive pressure drop could mean that the demister is partially plugged. The pressure drop across the demister usually varies between 0.5 to 2.0 inches of water column.

It may be possible to observe the demister if the scrubber is off-line. Get permission from the operator before opening any access doors and to assure that it is safe. Check for solids buildup, corrosion, and damage. Also check the condition of the spray nozzles.

Never enter any enclosed equipment at a facility unless all confined space requirements are met. The state and federal safety and health departments (OSHA) have detailed procedures that must be followed to protect personnel from serious injury or death. These procedures are necessary because confined spaces can be filled with toxic gases, can be oxygen deficient and can contain other hazards. Confined space requirements are defined in the California Code of Regulation, Title 8, Sections 5156-5159 (8 CCR 5156-5159) and in the Code of Federal Regulations, Title 29, Chapter 27, Section 1910.146 (CFR 1910.146).

606.2.10 Inspecting Scrubber Internals

Demister

If the scrubber system is out of service it may be possible to inspect the internals. This is educational, as well helpful to understand past or future operational problems. Permission must be obtained from the operator and access doors or hatches should be opened by them. Some systems may be equipped with sight glasses to help view the inside. As mentioned above, make sure confined space requirements are met.

Packed Bed Scrubbers
Look at the support for the packing and make sure it is not collapsed or heavily corroded. Notice if there is any excessive solids accumulation in the bed, especially near the bottom where the dirty gas enters the vessel. If they can be seen, inspect the spray nozzles for erosion or plugging.

Tray Tower Scrubbers
Check for bowed or sagging trays and look for plugged holes in the trays. Look for corrosion on trays and downcomers. Make sure there are no broken downcomers.

Venturi Scrubbers
Inspect for erosion of dampers and venturi throats. Check for restricted throat damper movement from solids deposits.

Scrubber Internals

606.3 PETROLEUM REFINERY BOILERS

In petroleum refineries, a continuous monitor for sulfur or H_2S is required on the fuel gas to all boilers. Generally, light fuel grade gases are sent to a central unit where they are treated to remove sulfur compounds and mixed together to provide a homogenous fuel gas source for all of the refinery boilers. This mixed and treated stream is often equipped with a continuous sulfur monitor to assure compliance with SOx emission regulations.

Record the current sulfur monitor reading and review the data history for sulfur excursions. These values may be found on a recorder chart for the instrument or in a computer database. The unit operator should be able to make this

information available. Verify that any excursions were reported properly. Also verify that the instrument is being calibrated periodically as required in 40CFR 60, Appendix F.

Refinery Fuel Gas

These QA procedures include:

- daily calibration with two concentrations of span gas
- quarterly auditing of the span gas cylinder
- yearly comparison with source test to determine relative accuracy
- proper recordkeeping of the QA steps taken
- records available for inspection

If for some reason you question the H_2S content of the fuel, a simple test for it can be conducted using a Draeger tube. Be aware of the dangers of H_2S. If the Draeger results are high, borderline, or otherwise inconsistent with the continuous monitor, a sample should be taken for further evaluation. This fuel gas sample will require an evacuated gas cylinder. In order to obtain a sample, a small purge to atmosphere may be necessary. Protective breathing equipment such as an SCBA may be necessary.

607 VISIBLE EMISSIONS INSPECTIONS

USEPA Method 9 (Visual Determination of the Opacity of Emissions from Stationary Sources) is found in 40 CFR 60. The method requires the recording of certain specific information in the field documentation of a visible emission observation. The required information includes the name of the facility, the emission location, the type of facility, the observer's name and affiliation, the date, the time, the estimated distance to the emission location, the approximate wind speed and direction, a description of the sky, and the plume background, in addition to a minimum of 24 consecutive opacity observations taken once every 15 seconds.

VE

In California, the visible emission regulation is in Section 41701 of the California Health and Safety Code. The limit in the Health and Safety Code is a Ringelmann No. 2 for dark colored emissions and is 40% opacity for light colored emissions. The Ringelmann chart is a gray to black smoke scale published by the United States Bureau of Mines with a range from 0 to 5. "0" represents no visible smoke and "5" is 100% opaque or totally black smoke. In

most local air quality districts, the acceptable limit is Ringelmann No. 1 or 20% opacity. California provides that an aggregate of any 13 or more readings above the limit (totalling more than 3 minutes) taken in a 1-hour period is a violation.

Smoke Reading

Observe all boiler stacks for emissions which would violate the opacity or Ringelmann limitations in your district regulations. Remember, you must be certified to do a visible emissions evaluation. A visible emissions evaluation (VEE) kit should be available to the inspector. The kit should include:

- VEE Forms
- Binoculars
- Wind gauge
- Stopwatch
- Camera and film
- Pens
- Flashlight
- Range finder - to measure distance to the stack
- Psychrometer - to calculate relative humidity
- Inclinometer - to measure angle of view to stack
- Compass
- Water bottle
- Ringlemann chart

Smoke from gas-fired boilers is a rather uncommon occurrence, usually resulting from an inadequate supply of oxygen during combustion. Most operators are trained to report and correct any smoking stacks immediately. If smoking does occur, it is most likely to happen during start-up or for short periods before it is detected and corrected. Most gas-fired boilers have sufficient instrumentation and controls on excess oxygen and often on carbon monoxide to nearly eliminate smoking under normal circumstances.

Smoking from boilers burning oils or solid fuels is more common. Efficient fuel/air mixing is more difficult with these fuels. Many natural gas fired boilers use diesel #2 or fuel oil #6 as a backup, for example during gas curtailment due to shortages. The Permit to Operate may allow the backup fuel but it may require that the system be tested annually, with the air quality inspector present, to assure that the oil can be fired cleanly.

Smoke Color

The color of the plume is also valuable information. For fossil fuel combustion sources, the color is indicative of operating conditions. For example, grey smoke can indicate inadequate air supply or poor air distribution. Black smoke may mean lack of air, clogged or dirty burners, insufficient atomizing pressure, or improper oil reheat. Reddish brown smoke may signal excess furnace temperatures resulting in high production of NOx. Bluish white smoke may indicate a high sulfur content in the fuel.

Steam

A visible emissions observation of a wet scrubber is more difficult in that the water vapor in the flue gas cannot be counted as part of the plume. Because of the condensed water vapor in scrubber plumes, opacity monitoring instruments are not used in particulate wet scrubbers. Therefore, the emissions from a scrubber must be viewed after the steam plume evaporates, or "breaks". There should be little or no visible emissions beyond the evaporation of the steam plume. If the opacity of the plume beyond the vaporization of the steam is greater than 10%, there is a problem with the system. If it is greater than a Ringelmann 1 or 20% opacity, it is a violation in most districts. When a detached steam plume forms, it may be possible to evaluate visible emissions between the stack and the steam plume.

607.1 VISIBLE EMISSIONS CERTIFICATION

Check with the California Air Resources Board (CARB) for information on certification at 800-952-5588. The Compliance Division of the CARB trains and certifies government and industry personnel in visible emissions evaluations at its popular "Fundamentals of Enforcement" class which is offered four times a year. Certified personnel are required to recertify every six months in order to demonstrate ongoing evaluation skill.

607.2 BAGHOUSE INSPECTION

Inspection of a baghouse should begin with the visible emissions evaluation and proceed with a check of the continuous emissions monitor for opacity. The baghouse may then be checked for skin leaks and key operating parameters such as the pressure drop through the filters and the gas flow rate. A more complete discussion of the inspection of baghouses can be found in the CARB technical manual Baghouses, published by the Compliance Assistance Program.

607.2.1 Pressure Drop

The pressure drop across the filter bags is often the most informative piece of information available. When evaluated in relation to historical values, flow rates, and opacity, the pressure drop can indicate the health of the filtration unit. A clean healthy unit might normally operate with a pressure drop through the filters of 3 to 10 inches of water column. After a while, some of the pores in the filters can become permanently clogged and flow through the bags is more difficult.

More pressure is required to push the gases through the filters and the pressure drop increases. The normal bag cleaning cycle may become ineffective and the bags must eventually be replaced. Of course, other things can cause a historically high pressure drop. High gas flow rates will cause higher pressure drops, as will a solids buildup in the inlet or exit of the unit.

Pressure Drop

On the other hand, a bag failure such as a tear or blowout can be indicated by an abnormally low pressure drop. This is also usually accompanied by an increase in the opacity of the effluent. A marginal opacity and a low pressure drop together could well mean a bag failure has occurred.

607.2.2 Inleakage of Air

Since most baghouses operate using an induced draft fan which pulls the gases through the unit, the baghouse is at a pressure lower than atmospheric. Skin leaks will result in air flowing into the system. This can result in a loss in collection efficiency and can dilute the effluent with a corresponding dilution of opacity, NOx, SOx, etc. readings. The inspector should attempt to determine if significant inleakage is occurring.

There several ways that inleakage can be detected. First, there should not be a significant temperature drop through the unit. Cold air leaking in will cause a noticeable drop in temperature. If temperature gauges are available, record them and compare to baseline values. Simple hand-held contact thermometers can measure the temperatures of the inlet and outlet duct work and can be used to detect large air leaks. Second, a large increase in the power consumption (or current) by the fan can indicate air inleakage, assuming that the boiler firing rate has not changed. If available, record the power use (or current) and compare to baseline values along with the firing rate. A third method is to measure the oxygen level in the flue gas before and after the baghouse unit. A significant increase in oxygen levels will indicate that air is leaking in. A hand-held oxygen analyzer can often be used for this, provided that temperatures are not too high and that sample points are available. Be very careful that air inleakage at the sample point does not cause erroneous oxygen readings.

Baghouse Skin Leaks

607.2.3 Maintenance Records

Baghouse Maintenance

Review the maintenance records to assure that the filter bags are being replaced on a regular and frequent basis. If possible, observe the effluent stack while a bag cleaning cycle is taking place. Although a visible puff may occur, it should be reasonable and should not exceed the 3 minutes per hour limitation. These visible puffs may also be a source for complaints from the neighbors.

607.2.4 Physical Condition - Housekeeping

Observe the equipment for evidence of corrosion or wear, surface skin leaks (holes or the sound of sucking air), and general housekeeping in the area. Examine the hopper area for piles of dust and, if possible, witness as the hoppers are emptied and the solids are hauled out. If not handled properly, this can be a very messy operation.

607.3 ELECTROSTATIC PRECIPITATORS (ESPs)

The use of electrostatic precipitators is not common on California boilers but there are a few types of installations where they are used. For example, there are a number of coal-fired boilers using fluidized bed combustion which use precipitators to reduce particulate emissions. Several petroleum refineries also have a fluidized bed process called fluidized catalytic cracking (FCC). The FCC is then followed by a waste heat boiler to produce steam from the hot (and dusty) off-gases. This waste heat boiler (often called a CO boiler) is then followed by an electrostatic precipitator to remove the catalyst dust from the gases before they are emitted to atmosphere. Other boilers burning solid fuels, such as biomass, may also use ESPs to remove particulate emissions. A more complete discussion of the inspection of precipitators can be found in the CARB technical manual Electrostatic Precipitators, published by the Compliance Assistance Program.

VE

Observe the stack effluent and take VE readings using Method 9 procedures. This VE reading is used to determine the compliance status of the effluent. But the VE is also useful to verify the operation of a continuous opacity meter (if installed). Try to take the visual readings and then proceed promptly to the continuous opacity monitor for comparison. It is recommended not to inspect

the continuous monitor first, as this may subconsciously affect your VE readings. Resolve any conflicts between the observed emissions and the instrument readings.

Observe the equipment for evidence of corrosion or wear, surface skin leaks (signs of dust or smoke), and general housekeeping in the area. Examine the hopper area for piles of dust and, if possible, witness as the hoppers are emptied and the solids are hauled out. If not handled properly, solids transfer can be a very dirty. Record your observations.

ESPs

Note how many precipitators are in operation and whether they are being operated in series or parallel. Record the secondary voltage (the corona wire voltage), the spark rate, the secondary current, and the rapper timing for each section of the precipitator. If possible, compare these with historical values for evidence of normal operation.

608 POST-INSPECTION PROCEDURES

Prior to leaving the facility, the inspector should evaluate the compliance status of the target equipment and should obtain all the information necessary to complete the inspection form. Make sure you have also acquired all the necessary documents to determine the compliance of the operation.

A post-inspection meeting, similar to the pre-inspection meeting, is recommended to discuss the findings of the inspection. Appropriate personnel at the facility should be advised of any areas of concern where additional information or investigation is needed. Be prepared to make your compliance determinations, calculate excess emissions, and issue necessary violation notices. Be able to document future NOVs which may be pending due to sample results or additional information requests. **Follow up all violations**, according to your district policy, to ensure that the source is brought into compliance.

609 CONFIDENTIAL DATA

Many types of operational data are considered confidential by owners. Business is very competitive and it may be an unfair advantage to learn how one's competitors operate or solve problems by way of an air pollution control agency.

Follow Up

Flow rates, operating temperatures and pressures, type of catalyst used, etc. may be considered confidential. But flow rates, temperatures, and pressures may also be necessary for the proper evaluation of an emission source or an emission control device.

Normally, when an operator provides data which is confidential, they indicate the confidentiality and the data is labeled as such. The data is then handled with proper care. If a public information request is made for the data, the owner is then notified and permission for disclosure is asked. Disclosure may or may not be granted. Legally, of course, this subject is more complicated and is addressed in the California Code of Regulations (CCR), Title 17, Sections 91000 - 91022, Disclosure of Public Records.

Please note: **Emission data shall not be considered as confidential.**

GLOSSARY

Air Preheater - A heat exchanger which uses hot exhaust gases to preheat cold ambient air before it enters the furnace.

Ammonia slip - Excess ammonia that may pass through the catalyst bed of a Selective Catalytic Reduction unit into the atmosphere.

Anhydrous Ammonia - Ammonia that hasn't been dissolved in water.

Annubar - A type of flow meter used to measure the average velocity of flue gases in an exhaust stack. A modified form of pitot tube that has multiple ports in a pipe which runs across the stack.

APCD - (Air Pollution Control District): A county agency with authority to regulate stationary, indirect, and area sources of air pollution (e.g., power plants, highway construction, and housing developments) within a given county, and governed by a district air pollution control board composed of the elected county supervisors.

AQMD - (Air Quality Management District): A group of counties or portions of counties, or an individual county specified in law with authority to regulate stationary, indirect, and area sources of air pollution within the region and governed by a regional air pollution control board comprised mostly of elected officials from within the region.

Aqueous Ammonia - Ammonia that has been dissolved in water.

ARB - (California Air Resources Board): The States's lead air quality agency consisting of a nine-member Governor-appointed board. It is responsible for attainment and maintenance of the State and federal air quality standards, and is full responsible for motor vehicle pollution control. It oversees county and regional air pollution management programs.

ARB Method 5 - Used in most air districts to source test a facility for the determination of particulate emissions concentrations.

BACT - (Best Available Control Technology) - an emission limitation based on the maximum degree of emission reduction which (considering energy, environmental, and economic impacts and other costs) is achievable through application of production processes and available methods, systems, and

techniques. In no event does BACT permit emissions in excess of those allowed under any applicable NSPS or NESHAP. It is applicable on a case-by-case basis for each major new (or modified) emission source to be located in areas not attaining the National Ambient Air Quality Standards. It applies to each pollutant regulated under the Federal Clean Air Act, and is concerned with Prevention of Significant Deterioration (PSD). See Sections 165(a) (4) and 169 of the Federal Clean Air Act.

Biomass - Fuel composed of wood wastes and agricultural wastes.

Boiler Load - The amount of steam being produced by the boiler.

Burner - A device that admits air and fuel into the firebox in a controlled way to ensure safe and efficient combustion.

Btu - (British thermal unit) The energy needed to heat one pound of water from 60 ^{o}F to 61 ^{o}F.

Calibration Gases - Gases, usually kept in compressed gas cylinders, which have a known concentration of a pollutant and are used to calibrate continuous emission monitors or other instruments.

Carrier Gas - A clean dry gas, usually air, used to dilute a stack gas sample to prevent condensation in the sample line.

CEM Certification - A three-part process including written application, installation and source testing, and final application evaluation. Often required by an air district before CEM emission data is acceptable.

Chemiluminescence - A chemical reaction that gives off light or luminescence. An analytical method often used in CEMs to measure NOx.

Close-coupled - When the conditioning system and the analyzer are installed directly on the stack, adjacent to the sample point on some extractive monitoring systems.

CO - (Carbon Monoxide): A colorless, odorless gas resulting from the incomplete combustion of fossil fuels. Over 80% of the CO emitted in urban areas is contributed by motor vehicles. CO interferes with the blood's ability to carry oxygen to the body's tissues and results in numerous adverse health effects. CO is a criteria air pollutant.

CO_2 - (Carbon Dioxide): A colorless, odorless, gas that occurs naturally in the earth's atmosphere. Significant quantities are also emitted into the air by fossil fuel combustion. Emissions of CO_2 have been implicated with increasing the greenhouse effect.

Combustion Contaminants - Any particulate matter discharged into the atmosphere from the burning of any material which contains carbon in either the free or the combined state.

Compliance Status - The evaluation of a source by either inspections, continuous emission monitoring, engineering evaluations or source testing.

Conduction - Heat transfer from a hot object which is touching a cooler object or heat transfer through an object from the hot side to the cooler side.

Continuous Emission Monitor (CEM) - A instrument used to sense, measure, indicate and permanently record emissions on a continuous basis.

Convection - The transfer of heat by a flowing fluid.

Convection Section - A section of the boiler that recovers heat from the hot flue gases.

Criteria Air Pollutant - An air pollutant for which acceptable levels of exposure can be determined and for which an ambient air quality standard has been set.

Cross-stack - Monitors that measure the concentration along a path through all or some of the exhaust stack diameter.

Damper - A plate or disk which can be rotated in the duct or stack to partially block the flow of flue gases.

GLOSSARY

Dilution Gas - A clean dry gas, usually air, used to dilute a stack gas sample to prevent condensation in the sample line. Also called carrier gas.

Distillate Oil Fuel used mainly in domestic and small commercial applications where clean and easy fuel burning is required. Examples include kerosene and diesel.

Downcomers - Unheated tubes that circulate boiler water from the steam drum to the mud drum to replenish the heated riser tubes.

Dry Basis - A basis for indicating the concentration of a pollutant in the stack gas where all water vapor in the stack gas is not included in the calculation.

Duct Burner - Located in the flue gas duct, it burns fuel (usually natural gas) to add heat to the flue gas.

Electrocatalysis - An analytical method often used in-situ to measure oxygen concentrations.

Excess Air - The amount of air added to the boiler over and above that which is theoretieally necessary to combust the fuel. Some excess air is necessary to ensure complete combustion.

Extractive Monitor - A monitoring system that withdraws a sample of the flue gas stream, conditions the sample by cooling it and by removing moisture and particulate, and then pumps it to the analyzer.

Firebox - The section of the boiler in which the flame radiates heat to the surrounding tubes which carry the boiling water. Also known as the furnace or radiant section.

Flue Gas Recirculation - The recirculation of flue gases back to the burner to reduce NOx emissions.

Fluidized Bed - A type of combustion where the combustion air is added at the bottom and bubbles up through a bed of sand-like particles. Fuel is added to the bubbling bed (fluidized bed) and burns there.

Forced Draft - The use of a fan on the inlet air to push combustion air into the boiler.

Fuel NOx - NOx which forms when chemically bound nitrogen in the fuel reacts with oxygen during combustion.

Fuel Staging - A common method for lowering NOx formation in low-NOx burners. First, part of the fuel is burned with excess air and the resulting air-cooled flame does not produce much NOx. Then more fuel is added to combust with the remaining air and the flame temperature is again kept low by the presence of the combustion gases and NOx production is again reduced.

Higher Heating Value - Also called gross heating value. Total heat released during combustion as the combustion products cool to 60 degrees Fahrenheit and as any water vapor condenses to water.

In-situ - Within the stack or duct work. An in-situ CEM analyzes the flue gas while the gas remains in the stack.

Induced Draft - The use of a fan on the outlet flue gases to suck gases through the furnace.

Low Excess Air - A NOx reduction technique where the oxygen concentration in the stack is kept below 3%.

Low-NOx Burner - A fuel burner which mixes air and fuel in such a way as to minimize NOx formation.

Low-Sulfur Fuel Oil - Fuel oil containing less than 0.5% sulfur.

Lower Heating Value - Total heat released during combustion as the combustion products cool to 60 degrees Fahrenheit and as any water vapor remains a vapor. Compare to Higher Heating Value.

Modification - "Any physical or operational change to an existing facility which results in an increase in the emission rate to the atmosphere of any pollutant to which a standard applies...", per 40CFR60.14.

Mud Drum - Serves as a header to distribute water to the boiler tubes.

Natural Draft - The tendency for hot flue gases to flow upward through the stack and draw air into the firebox.

Natural Gas - Fuel gas with over 80% methane and varying amounts of ethane, propane, and butane. Natural gas is the most common fuel burned in California and burns relatively clean.

Nitrogen Oxides - (Oxides of Nitrogen, NOx) A general term pertaining to compounds of nitric oxide (NO), nitrogen dioxide (NO_2), and other oxides of nitrogen. Nitrogen oxides are typically created during combustion processes, and are major contributors to smog formation and acid deposition. NO is a criteria air pollutant, and may result in numerous adverse health effects.

NSPS - New Source Performance Standards. 40CFR Part 60.

NSR - (New Source Review): A program used in development of permits for new or modified industrial facilities which are in a non-attainment area, and which emit non-attainment criteria air pollutants. The two major requirements of NSR are Best Available Control Technology and Emission Offset.

Oil Gun - A burner tip designed to atomize oil using steam or compressed air. Often it is inserted into the center of a gas burner when switching fuels.

Ozone Layer - A layer of ozone 12 to 15 miles above the earth's surface which helps to filter out harmful ultraviolet rays from the sun.

Ozone Precursors - Chemicals such as hydrocarbons and oxides of nitrogen, occurring either naturally or as a result of human activities, which contribute to the formation of ozone, a major component of smog.

Particulate Loading - The amount of particulates entering a precipitator or baghouse. As particulate loading increases, the amount which will pass though uncollected will usually also increase.

Permit - Written authorization from a government agency (e.g., an air quality management district) that allows for the construction and/or operation of an emissions generating facility or its equipment within certain specified limits.

pH - A measurement of acidity levels.

Photochemical Reaction - A term referring to chemical reactions brought about by the light energy of the sun. The reaction of nitrogen oxides with oxygen in the presence of sunlight to form ozone is an example of a photochemical reaction.

Pitot Tube - An instrument used to measure the flow rate. It consists of two tubes, one facing into the flue gas flow and one facing away from or perpendicular to the flue gas flow. The pressure difference between the two tubes indicates the velocity of the gas.

PM-10 - (Particulate Matter) A major air pollutant consisting of tiny solid or liquid particles of soot, dust, smoke, fumes, and mists. The size of the particles (10 microns or smaller, about 0.0004 inches or less) allows them to easily enter the air sacs deep in the lungs where they may be deposited to result in adverse health effects. PM-10 also causes visibility reduction and is a criteria air pollutant.

Pre-mix Burner - Fuel gas burner which mixes the air and fuel together before they are introduced to the firebox and ignited. Often results in significant NOx formation.

Precipitator Collection Efficiency - Percentage of dust collected by the control device.

Probe - A tube which is inserted into the exhaust stack through which a sample of the flue gas is withdrawn for analysis.

Products Of Combustion - Gases and particulates that form in the furnace as a result of the fuel burning in air.

Radiant Section - The section of the boiler where the primary method of heat transfer from the flames to the tubes is radiation. Also called the furnace or the firebox.

Radiation - The transfer of heat through space from a hot object to a cool one.

Response Time - The time lapse between a change in the flue gas and when it is indicated on the analyzer.

GLOSSARY

Ringelmann Chart - A gray to black smoke scale published by the U.S. Bureau of Mines ranging from 0 to 5, where "5" is black smoke with 100% opacity, "4" is 80% opacity, "3" is 60% opacity, "2" is 40% opacity, and "1" is 20% opacity. A Ringelmann reading of 1 is the limit in most air districts.

ROG - (Reactive Organic Gas) - A reactive hydrocarbon which is a precursor to the formation of ozone and contributes to the formation of smog. Also referred to as Non-Methane Organic Compounds (NMOCs) or Volatile Organic Compounds (VOCs).

Saturated Steam - Steam with a temperature at the dew point, which is beginning to condense.

SCM - (Suggested Control Measure) - A rule recommended for local districts to use to control the emissions from certain stationary sources of air pollution.

SCR - (Selective Catalytic Reduction) - A method used to convert NOx to nitrogen using a catalyst bed and the addition of ammonia.

Slurry - Chemical reagents that have been mixed with water and sprayed through the flue gas to scrub out the sulfur compounds. These reagents are usually an alkali material such as calcium in the form of lime or limestone, or sodium in the form of minerals such as nahcolite or trona.

Smog - A combination of smoke, ozone, hydrocarbons, nitrogen oxides, and other chemically reactive compounds which, under certain conditions of weather and sunlight, may result in a murky brown haze that causes adverse health effects. The primary source of smog in California is motor vehicles.

Smoke - A form of air pollution consisting primarily of particulate matter.

SO_2 - (Sulfur Dioxide) - A strong smelling, colorless gas that is formed by the combustion of fossil fuels which contain sulfur.

Soot Blowing - The process of blowing soot or ashes from the tubes in a boiler.

Spark Rate - A measurable electric arc rate associated with the efficiency of an electrostatic precipitator.

Stationary Sources - Non-mobile sources of air pollutants such as power plants, refineries, and manufacturing facilities.

Steam Drum - A large cylindrical vessel located at the top of the boiler used to separate the steam from hot water.

Superheated Steam - Steam with a temperature above the dew point.

Systems Audit - A type of audit that would normally be done by a local air quality inspector. Not a hands-on audit, but an inspection of operations and management practices.

Thermal NOx - NOx formed at the high temperatures present at the flame tip. At temperatures above about 2800°F, atmospheric nitrogen breaks apart and recombines with oxygen to form NOx.

Umbilical Cord - Part of a CEM. The flue gas sample is transferred from the probe, through the umbilical cord, to the analyzer. The umbilical cord may contain the sample line, blowback line, calibration gas line, heating element, electrical wires, etc.

Urea - $CO(NH_2)_2$ - Additive used in selective non-catalytic reduction (SNCR) units for the destruction of NOx.

UV Florescence - Analytical method using light emissions to measure SOx.

Variance - A temporary relaxation of the regulations or permit conditions which allows a facility to continue operation for a specified time until the facility can come back into compliance.

VOCs - Reactive hydrocarbons which are a precursor to the formation of ozone and contribute to the formation of smog. Also referred to as Non-Methane Organic Compounds (NMOCs) or Reactive Organic Gases (ROGs).

Waterwall - Wall of many tubes placed side by side against the furnace walls. The waterwall increases the heating surfaces of the boiler and helps prevent refractory damage due to overheating.

GLOSSARY

Wet Slurry Throwaway Scrubbing - A flue gas desulfurization system that used a non-soluble reagent and produces a waste that is disposed of.

Wind Box - Plenum to which the forced draft fan supplies air before the air enters the furnace.

APPENDIX A

Boilers

Code of Federal Regulations
Title 40 - Protection of the Environment
Part 60 - New Source Performance Standards (NSPS)

Subpart D

Standards of Performance for Fossil-Fuel-Fired Steam Generators for Which Construction Is Commenced After August 17, 1971

1997

Subpart D—Standards of Performance for Fossil-Fuel-Fired Steam Generators for Which Construction Is Commenced After August 17, 1971

§ 60.40 Applicability and designation of affected facility.

(a) The affected facilities to which the provisions of this subpart apply are:

(1) Each fossil-fuel-fired steam generating unit of more than 73 megawatts heat input rate (250 million Btu per hour).

(2) Each fossil-fuel and wood-residue-fired steam generating unit capable of firing fossil fuel at a heat input rate of more than 73 megawatts (250 million Btu per hour).

(b) Any change to an existing fossil-fuel-fired steam generating unit to accommodate the use of combustible materials, other than fossil fuels as defined in this subpart, shall not bring that unit under the applicability of this subpart.

(c) Except as provided in paragraph (d) of this section, any facility under paragraph (a) of this section that commenced construction or modification after August 17, 1971, is subject to the requirements of this subpart.

(d) The requirements of §§ 60.44 (a)(4), (a)(5), (b) and (d), and 60.45(f)(4)(vi) are applicable to lignite-fired steam generating units that commenced construction or modification after December 22, 1976.

(e) Any facility covered under subpart Da is not covered under this subpart.

[42 FR 37936, July 25, 1977, as amended at 43 FR 9278, Mar. 7, 1978; 44 FR 33612, June 17, 1979]

§ 60.41 Definitions.

As used in this subpart, all terms not defined herein shall have the meaning given them in the Act, and in subpart A of this part.

(a) *Fossil-fuel fired steam generating unit* means a furnace or boiler used in the process of burning fossil fuel for the purpose of producing steam by heat transfer.

(b) *Fossil fuel* means natural gas, petroleum, coal, and any form of solid, liquid, or gaseous fuel derived from such materials for the purpose of creating useful heat.

(c) *Coal refuse* means waste-products of coal mining, cleaning, and coal preparation operations (e.g. culm, gob, etc.) containing coal, matrix material, clay, and other organic and inorganic material.

(d) *Fossil fuel and wood residue-fired steam generating unit* means a furnace or boiler used in the process of burning fossil fuel and wood residue for the purpose of producing steam by heat transfer.

(e) *Wood residue* means bark, sawdust, slabs, chips, shavings, mill trim, and other wood products derived from wood processing and forest management operations.

(f) *Coal* means all solid fuels classified as anthracite, bituminous, subbituminous, or lignite by the American Society and Testing and Materials, Designation D388–77 (incorporated by reference—see §60.17).

[39 FR 20791, June 14, 1974, as amended at 40 FR 2803, Jan. 16, 1975; 41 FR 51398, Nov. 22, 1976; 43 FR 9278, Mar. 7, 1978; 48 FR 3736, Jan. 27, 1983]

§ 60.42 Standard for particulate matter.

(a) On and after the date on which the performance test required to be conducted by § 60.8 is completed, no owner or operator subject to the provisions of this subpart shall cause to be discharged into the atmosphere from any affected facility any gases which:

(1) Contain particulate matter in excess of 43 nanograms per joule heat input (0.10 lb per million Btu) derived from fossil fuel or fossil fuel and wood residue.

(2) Exhibit greater than 20 percent opacity except for one six-minute period per hour of not more than 27 percent opacity.

(b)(1) On or after December 28, 1979, no owner or operator shall cause to be discharged into the atmosphere from the Southwestern Public Service Company's Harrington Station #1, in Amarillo, TX, any gases which exhibit greater than 35% opacity, except that a maximum or 42% opacity shall be permitted for not more than 6 minutes in any hour.

(2) Interstate Power Company shall not cause to be discharged into the atmosphere from its Lansing Station Unit No. 4 in Lansing, IA, any gases which exhibit greater than 32% opacity, except that a maximum of 39% opacity shall be permitted for not more than six minutes in any hour.

(3) Omaha Public Power District shall not cause to be discharged into the atmosphere from its Nebraska City Power Station in Nebraska City, NE, any gases which exhibit greater than 30% opacity, except that a maximum of 37% opacity shall be permitted for not more than six minutes in any hour.

[39 FR 20792, June 14, 1974, as amended at 41 FR 51398, Nov. 22, 1976; 42 FR 61537, Dec. 5, 1977; 44 FR 76787, Dec. 28, 1979; 45 FR 36077, May 29, 1980; 45 FR 47146, July 14, 1980; 46 FR 57498, Nov. 24, 1981]

§ 60.43 Standard for sulfur dioxide.

(a) On and after the date on which the performance test required to be conducted by § 60.8 is completed, no owner or operator subject to the provisions of this subpart shall cause to be discharged into the atmosphere from any affected facility any gases which contain sulfur dioxide in excess of:

(1) 340 nanograms per joule heat input (0.80 lb per million Btu) derived from liquid fossil fuel or liquid fossil fuel and wood residue.

(2) 520 nanograms per joule heat input (1.2 lb per million Btu) derived from solid fossil fuel or solid fossil fuel and wood residue, except as provided in paragraph (e) of this section.

(b) When different fossil fuels are burned simultaneously in any combination, the applicable standard (in ng/J) shall be determined by proration using the following formula:

$$PS_{SO2}=[y(340)+z(520)]/(y+z)$$

where:

PS_{SO2} is the prorated standard for sulfur dioxide when burning different fuels simultaneously, in nanograms per joule heat input derived from all fossil fuels fired or from all fossil fuels and wood residue fired,

y is the percentage of total heat input derived from liquid fossil fuel, and

z is the percentage of total heat input derived from solid fossil fuel.

(c) Compliance shall be based on the total heat input from all fossil fuels burned, including gaseous fuels.

(d) [Reserved]

(e) Units 1 and 2 (as defined in appendix G) at the Newton Power Station owned or operated by the Central Illinois Public Service Company will be in compliance with paragraph (a)(2) of this section if Unit 1 and Unit 2 individually comply with paragraph (a)(2) of this section or if the combined emission rate from Units 1 and 2 does not exceed 470 nanograms per joule (1.1 lb per million Btu) combined heat input to Units 1 and 2.

[39 FR 20792, June 14, 1974, as amended at 41 FR 51398, Nov. 22, 1976; 52 FR 28954, Aug. 4, 1987]

§ 60.44 Standard for nitrogen oxides.

(a) On and after the date on which the performance test required to be conducted by § 60.8 is completed, no owner or operator subject to the provisions of this subpart shall cause to be discharged into the atmosphere from any affected facility any gases which contain nitrogen oxides, expressed as NO_2 in excess of:

(1) 86 nanograms per joule heat input (0.20 lb per million Btu) derived from gaseous fossil fuel.

(2) 129 nanograms per joule heat input (0.30 lb per million Btu) derived from liquid fossil fuel, liquid fossil fuel and wood residue, or gaseous fossil fuel and wood residue.

(3) 300 nanograms per joule heat input (0.70 lb per million Btu) derived from solid fossil fuel or solid fossil fuel and wood residue (except lignite or a solid fossil fuel containing 25 percent, by weight, or more of coal refuse).

(4) 260 nanograms per joule heat input (0.60 lb per million Btu) derived from lignite or lignite and wood residue (except as provided under paragraph (a)(5) of this section).

(5) 340 nanograms per joule heat input (0.80 lb per million Btu) derived from lignite which is mined in North Dakota, South Dakota, or Montana and which is burned in a cyclone-fired unit.

(b) Except as provided under paragraphs (c) and (d) of this section, when different fossil fuels are burned simultaneously in any combination, the applicable standard (in ng/J) is determined by proration using the following formula:

$$PS_{NOx} = \frac{w(260)+x(86)+y(130)+z(300)}{w+x+y+z}$$

where:

PS_{NOx}=is the prorated standard for nitrogen oxides when burning different fuels simultaneously, in nanograms per joule heat input derived from all fossil fuels fired or from all fossil fuels and wood residue fired;

w=is the percentage of total heat input derived from lignite;

x=is the percentage of total heat input derived from gaseous fossil fuel;

y=is the percentage of total heat input derived from liquid fossil fuel; and

z=is the percentage of total heat input derived from solid fossil fuel (except lignite).

(c) When a fossil fuel containing at least 25 percent, by weight, of coal refuse is burned in combination with gaseous, liquid, or other solid fossil fuel or wood residue, the standard for nitrogen oxides does not apply.

(d) Cyclone-fired units which burn fuels containing at least 25 percent of lignite that is mined in North Dakota, South Dakota, or Montana remain subject to paragraph (a)(5) of this section regardless of the types of fuel combusted in combination with that lignite.

[39 FR 20792, June 14, 1974, as amended at 41 FR 51398, Nov. 22, 1976; 43 FR 9278, Mar. 7, 1978; 51 FR 42797, Nov. 25, 1986]

§ 60.45 Emission and fuel monitoring.

(a) Each owner or operator shall install, calibrate, maintain, and operate continuous monitoring systems for measuring the opacity of emissions, sulfur dioxide emissions, nitrogen oxides emissions, and either oxygen or carbon dioxide except as provided in paragraph (b) of this section.

(b) Certain of the continuous monitoring system requirements under paragraph (a) of this section do not apply to owners or operators under the following conditions:

(1) For a fossil fuel-fired steam generator that burns only gaseous fossil fuel, continuous monitoring systems for measuring the opacity of emissions and sulfur dioxide emissions are not required.

(2) For a fossil fuel-fired steam generator that does not use a flue gas desulfurization device, a continuous monitoring system for measuring sulfur dioxide emissions is not required if the owner or operator monitors sulfur dioxide emissions by fuel sampling and analysis under paragraph (d) of this section.

(3) Notwithstanding § 60.13(b), installation of a continuous monitoring system for nitrogen oxides may be delayed until after the initial performance tests under § 60.8 have been conducted. If the owner or operator demonstrates during the performance test that emissions of nitrogen oxides are less than 70 percent of the applicable standards in § 60.44, a continuous monitoring system for measuring nitrogen oxides emissions is not required. If the initial performance test results show that nitrogen oxide emissions are greater than 70 percent of the applicable standard, the owner or operator shall install a continuous monitoring system for nitrogen oxides within one year after the date of the initial performance tests under § 60.8 and comply with all other applicable monitoring requirements under this part.

(4) If an owner or operator does not install any continuous monitoring systems for sulfur oxides and nitrogen oxides, as provided under paragraphs (b)(1) and (b)(3) or paragraphs (b)(2) and (b)(3) of this section a continuous monitoring system for measuring either oxygen or carbon dioxide is not required.

(c) For performance evaluations under § 60.13(c) and calibration checks under § 60.13(d), the following procedures shall be used:

(1) Methods 6, 7, and 3B, as applicable, shall be used for the performance evaluations of sulfur dioxide and nitrogen oxides continuous monitoring systems. Acceptable alternative methods for Methods 6, 7, and 3B are given in § 60.46(d).

(2) Sulfur dioxide or nitric oxide, as applicable, shall be used for preparing calibration gas mixtures under Performance Specification 2 of appendix B to this part.

(3) For affected facilities burning fossil fuel(s), the span value for a continuous monitoring system measuring the opacity of emissions shall be 80, 90, or 100 percent and for a continuous monitoring system measuring sulfur oxides or nitrogen oxides the span value shall be determined as follows:

[In parts per million]

Fossil fuel	Span value for sulfur dioxide	Span value for nitrogen oxides
Gas	(1)	500
Liquid	1,000	500
Solid	1,500	1000
Combinations	$1{,}000y+1{,}500z$	$500(x+y)+1{,}000z$

[1] Not applicable.

where:

x=the fraction of total heat input derived from gaseous fossil fuel, and

y=the fraction of total heat input derived from liquid fossil fuel, and

z=the fraction of total heat input derived from solid fossil fuel.

(4) All span values computed under paragraph (c)(3) of this section for burning combinations of fossil fuels shall be rounded to the nearest 500 ppm.

(5) For a fossil fuel-fired steam generator that simultaneously burns fossil fuel and nonfossil fuel, the span value of all continuous monitoring systems shall be subject to the Administrator's approval.

(d) [Reserved]

(e) For any continuous monitoring system installed under paragraph (a) of this section, the following conversion procedures shall be used to convert the continuous monitoring data into units of the applicable standards (ng/J, lb/million Btu):

(1) When a continuous monitoring system for measuring oxygen is selected, the measurement of the pollutant concentration and oxygen concentration shall each be on a consistent basis (wet or dry). Alternative procedures approved by the Administrator shall be used when measurements are on a wet basis. When measurements are on a dry basis, the following conversion procedure shall be used:

$$E=CF[20.9/(20.9-\text{percent } O_2)]$$

where:

E, C, F, and $\%O_2$ are determined under paragraph (f) of this section.

(2) When a continuous monitoring system for measuring carbon dioxide is selected, the measurement of the pollutant concentration and carbon dioxide concentration shall each be on a consistent basis (wet or dry) and the following conversion procedure shall be used:

$$E=CF_c\ [100/\text{percent } CO_2]$$

where:

E, C, F_c and $\%CO_2$ are determined under paragraph (f) of this section.

(f) The values used in the equations under paragraphs (e) (1) and (2) of this section are derived as follows:

(1) E=pollutant emissions, ng/J (lb/million Btu).

(2) C=pollutant concentration, ng/dscm (lb/dscf), determined by multiplying the average concentration (ppm) for each one-hour period by 4.15×10^{4} M ng/dscm per ppm (2.59×10^{-9} M lb/dscf per ppm) where M=pollutant molecular weight, g/g-mole (lb/lb-mole). M=64.07 for sulfur dioxide and 46.01 for nitrogen oxides.

(3) $\%O_2$, $\%CO_2$=oxygen or carbon dioxide volume (expressed as percent), determined with equipment specified under paragraph (a) of this section.

(4) F, F_c=a factor representing a ratio of the volume of dry flue gases generated to the calorific value of the fuel combusted (F), and a factor representing a ratio of the volume of carbon dioxide generated to the calorific value of the fuel combusted (F_c), respectively. Values of F and F_c are given as follows:

(i) For anthracite coal as classified according to ASTM D388–77 (incorporated by reference—see § 60.17), $F=2{,}723\times10^{-17}$ dscm/J (10,140 dscf/million Btu and $F_c=0.532\times10^{-17}$ scm CO_2/J (1,980 scf CO_2/million Btu).

(ii) For subbituminous and bituminous coal as classified according to ASTM D388–77 (incorporated by reference—see § 60.17), $F=2.637\times10^{-7}$ dscm/J (9,820 dscf/million Btu) and $F_c=0.486\times10^{-7}$ scm CO_2/J (1,810 scf CO_2/million Btu).

(iii) For liquid fossil fuels including crude, residual, and distillate oils, $F=2.476\times10^{-7}$ dscm/J (9,220 dscf/million Btu) and $F_c=0.384\times10^{-7}$ scm CO_2/J (1,430 scf CO_2/million Btu).

(iv) For gaseous fossil fuels, $F=2.347\times10^{-7}$ dscm/J (8,740 dscf/million Btu). For natural gas, propane, and butane fuels, $F_c=0.279\times10^{-7}$ scm CO_2/J (1,040 scf CO_2/million Btu) for natural gas, 0.322×10^{-7} scm CO_2/J (1,200 scf CO_2/million Btu) for propane, and 0.338×10^{-7} scm CO_2/J (1,260 scf CO_2/million Btu) for butane.

(v) For bark $F=2.589\times10^{-7}$ dscm/J (9,640 dscf/million Btu) and $F_c=0.500\times10^{-7}$ scm CO_2/J (1,840 scf CO_2/ million Btu). For wood residue other than bark $F=2.492\times10^{-7}$ dscm/J (9,280 dscf/million Btu) and $F_c=0.494\times10^{-7}$ scm CO_2/J (1,860 scf CO_2/ million Btu).

(vi) For lignite coal as classified according to ASTM D388–77 (incorporated by reference—see § 60.17), $F=2.659\times10^{-7}$ dscm/J (9,900 dscf/million Btu) and $F_c=0.516\times10^{-7}$ scm CO_2/J (1,920 scf CO_2/million Btu).

(5) The owner or operator may use the following equation to determine an F factor (dscm/J or dscf/million Btu) on a dry basis (if it is desired to calculate F on a wet basis, consult the Administrator) or F_c factor (scm CO_2/J, or scf CO_2/million Btu) on either basis in lieu of the F or F_c factors specified in paragraph (f)(4) of this section:

$$F = 10^{-6}\,\frac{[227.2\,(\text{pct. H})+95.5\,(\text{pct. C})+35.6\,(\text{pct. S})+8.7\,(\text{pct. N})-28.7\,(\text{pct. O})]}{\text{GCV}}$$

$$F_c = \frac{2.0\times10^{-5}\,(\text{pct. C})}{\text{GCV}}$$

(SI units)

$$F = \frac{10^{6}\,[3.64(\%H)+1.53(\%C)+0.57(\%S)+0.14(\%N)-0.46(\%O)]}{GCV}$$

(English units)

$$F_c = \frac{20.0(\%C)}{GCV}$$

(SI units)

$$F_c = \frac{321\times10^{3}(\%C)}{GCV}$$

(English units)

(i) H, C, S, N, and O are content by weight of hydrogen, carbon, sulfur, nitrogen, and oxygen (expressed as percent), respectively, as determined on the same basis as GCV by ultimate analysis of the fuel fired, using ASTM method D3178–74 or D3176 (solid fuels) or computed from results using ASTM method D1137–53(75), D1945–64(76), or D1946–77 (gaseous fuels) as applicable. (These five methods are incorporated by reference—see § 60.17.)

(ii) GVC is the gross calorific value (kJ/kg, Btu/lb) of the fuel combusted determined by the ASTM test methods D2015–77 for solid fuels and D1826–77 for gaseous fuels as applicable. (These two methods are incorporated by reference—see § 60.17.)

(iii) For affected facilities which fire both fossil fuels and nonfossil fuels, the F or F_c value shall be subject to the Administrator's approval.

(6) For affected facilities firing combinations of fossil fuels or fossil fuels and wood residue, the F or F_c factors determined by paragraphs (f)(4) or (f)(5) of this section shall be prorated in accordance with the applicable formula as follows:

$$F=\sum_{i=1}^{n} X_iF_i \quad\text{or}\quad F_c=\sum_{i=1}^{n} X_i(F_c)_i$$

where:

X_i=the fraction of total heat input derived from each type of fuel (e.g. natural gas, bituminous coal, wood residue, etc.)

F_i or $(F_c)_i$=the applicable F or F_c factor for each fuel type determined in accordance with paragraphs (f)(4) and (f)(5) of this section.

n=the number of fuels being burned in combination.

(g) Excess emission and monitoring system performance reports shall be submitted to the Administrator for every calendar quarter. All quarterly reports shall be postmarked by the 30th day following the end of each calendar quarter. Each excess emission and MSP report shall include the information required in § 60.7(c). Periods of excess emissions and monitoring systems (MS) downtime that shall be reported are defined as follows:

(1) *Opacity.* Excess emissions are defined as any six-minute period during which the average opacity of emissions exceeds 20 percent opacity, except that one six-minute average per hour of up to 27 percent opacity need not be reported.

(i) For sources subject to the opacity standard of § 60.42(b)(1), excess emissions are defined as any six-minute period during which the average opacity of emissions exceeds 35 percent opacity, except that one six-minute average per hour of up to 42 percent opacity need not be reported.

(ii) For sources subject to the opacity standard of § 60.42(b)(2), excess emissions are defined as any six-minute period during which the average opacity of emissions exceeds 32 percent opacity, except that one six-minute average per hour of up to 39 percent opacity need not be reported.

(iii) For sources subject to the opacity standard of § 60.42(b)(3), excess emissions are defined as any six-minute period during which the average opacity of emissions exceeds 30 percent opacity, except that one six-minute average per hour of up to 37 percent opacity need not be reported.

(2) *Sulfur dioxide.* Excess emissions for affected facilities are defined as:

(i) Any three-hour period during which the average emissions (arithmetic average of three contiguous one-hour periods) of sulfur dioxide as measured by a continuous monitoring system exceed the applicable standard under § 60.43.

(3) *Nitrogen oxides.* Excess emissions for affected facilities using a continuous monitoring system for measuring nitrogen oxides are defined as any three-hour period during which the average emissions (arithmetic average of three contiguous one-hour periods) exceed the applicable standards under § 60.44.

[40 FR 46256, Oct. 6, 1975]

EDITORIAL NOTE: For FEDERAL REGISTER citations affecting § 60.45, see the List of CFR Sections Affected in the Finding Aids section of this volume.

§ 60.46 Test methods and procedures.

(a) In conducting the performance tests required in § 60.8, the owner or operator shall use as reference methods and procedures the test methods in appendix A of this part or other methods and procedures as specified in this section, except as provided in § 60.8(b). Acceptable alternative methods and procedures are given in paragraph (d) of this section.

(b) The owner or operator shall determine compliance with the particulate matter, SO_2, and NO_x standards in §§ 60.42, 60.43, and 60.44 as follows:

(1) The emission rate (E) of particulate matter, SO_2, or NO_x shall be computed for each run using the following equation:

$$E=C\ F_d\ (20.9)/(20.9-\%\ O_2)$$

E = emission rate of pollutant, ng/J (lb/million Btu).
C = concentration of pollutant, ng/dscm (lb/dscf).
$\%O_2$ = oxygen concentration, percent dry basis.
F_d = factor as determined from Method 19.

(2) Method 5 shall be used to determine the particular matter concentration (C) at affected facilities without wet flue-gas-desulfurization (FGD) systems and Method 5B shall be used to determine the particulate matter concentration (C) after FGD systems.

(i) The sampling time and sample volume for each run shall be at least 60 minutes and 0.85 dscm (30 dscf). The probe and filter holder heating systems in the sampling train may be set to provide a gas temperature no greater than 160±14 °C (320±25 °F).

(ii) The emission rate correction factor, integrated or grab sampling and analysis procedure of Method 3B shall be used to determine the O_2 concentration ($\%O_2$). The O_2 sample shall be obtained simultaneously with, and at the same traverse points as, the particulate sample. If the grab sampling procedure is used, the O_2 concentration for the run shall be the arithmetic mean of all the individual O_2 sample concentrations at each traverse point.

(iii) If the particulate run has more than 12 traverse points, the O_2 traverse points may be reduced to 12 provided that Method 1 is used to locate the 12 O_2 traverse points.

(3) Method 9 and the procedures in § 60.11 shall be used to determine opacity.

(4) Method 6 shall be used to determine the SO_2 concentration.

(i) The sampling site shall be the same as that selected for the particulate sample. The sampling location in the duct shall be at the centroid of the cross section or at a point no closer to the walls than 1 m (3.28 ft). The sampling time and sample volume for each sample run shall be at least 20 minutes and 0.020 dscm (0.71 dscf). Two samples

shall be taken during a 1-hour period, with each sample taken within a 30-minute interval.

(ii) The emission rate correction factor, integrated sampling and analysis procedure of Method 3B shall be used to determine the O_2 concentration ($\%O_2$). The O_2 sample shall be taken simultaneously with, and at the same point as, the SO_2 sample. The SO_2 emission rate shall be computed for each pair of SO_2 and O_2 samples. The SO_2 emission rate (E) for each run shall be the arithmetic mean of the results of the two pairs of samples.

(5) Method 7 shall be used to determine the NO_x concentration.

(i) The sampling site and location shall be the same as for the SO_2 sample. Each run shall consist of four grab samples, with each sample taken at about 15-minute intervals.

(ii) For each NO_x sample, the emission rate correction factor, grab sampling and analysis procedure of Method 3B shall be used to determine the O_2 concentration ($\%O_2$). The sample shall be taken simultaneously with, and at the same point as, the NO_x sample.

(iii) The NO_x emission rate shall be computed for each pair of NO_x and O_2 samples. The NO_x emission rate (E) for each run shall be the arithmetic mean of the results of the four pairs of samples.

(c) When combinations of fossil fuels or fossil fuel and wood residue are fired, the owner or operator (in order to compute the prorated standard as shown in §§ 60.43(b) and 60.44(b)) shall determine the percentage (w, x, y, or z) of the total heat input derived from each type of fuel as follows:

(1) The heat input rate of each fuel shall be determined by multiplying the gross calorific value of each fuel fired by the rate of each fuel burned.

(2) ASTM Methods D 2015–77 (solid fuels), D 240–76 (liquid fuels), or D 1826–77 (gaseous fuels) (incorporated by reference—see § 60.17) shall be used to determine the gross calorific values of the fuels. The method used to determine the calorific value of wood residue must be approved by the Administrator.

(3) Suitable methods shall be used to determine the rate of each fuel burned during each test period, and a material balance over the steam generating system shall be used to confirm the rate.

(d) The owner or operator may use the following as alternatives to the reference methods and procedures in this section or in other sections as specified:

(1) The emission rate (E) of particulate matter, SO_2 and NO_x may be determined by using the F_c factor, provided that the following procedure is used:

(i) The emission rate (E) shall be computed using the following equation:

$$E = C\ F_c\ (100/\%CO_2)$$

where:
E=emission rate of pollutant, ng/J (lb/million Btu).
C=concentration of pollutant, ng/dscm (lb/dscf).
$\%CO_2$=carbon dioxide concentration, percent dry basis.
F_c=factor as determined in appropriate sections of Method 19.

(ii) If and only if the average F_c factor in Method 19 is used to calculate E and either E is from 0.97 to 1.00 of the emission standard or the relative accuracy of a continuous emission monitoring system is from 17 to 20 percent, then three runs of Method 3B shall be used to determine the O_2 and CO_2 concentration according to the procedures in paragraph (b) (2)(ii), (4)(ii), or (5)(ii) of this section. Then if F_o (average of three runs), as calculated from the equation in Method 3B, is more than ±3 percent than the average F_o value, as determined from the average values of F_d and F_c in Method 19, i.e., $F_{oa}=0.209\ (F_{da}/F_{ca})$, then the following procedure shall be followed:

(A) When F_o is less than 0.97 F_{oa}, then E shall be increased by that proportion under 0.97 F_{oa}, e.g., if F_o is 0.95 F_{oa}, E shall be increased by 2 percent. This recalculated value shall be used to determine compliance with the emission standard.

(B) When F_o is less than 0.97 F_{oa} and when the average difference ($\bar{d}$) between the continuous monitor minus the reference methods is negative, then E shall be increased by that proportion under 0.97 F_{oa}, e.g., if F_o is 0.95 F_{oa}, E shall be increased by 2 percent. This recalculated value shall be used to determine compliance with the relative accuracy specification.

(C) When F_o is greater than 1.03 F_{oa} and when the average difference $\bar{d}$ is positive, then E shall be decreased by that proportion over 1.03 F_{oa}, e.g., if F_o is 1.05 F_{oa}, E shall be decreased by 2 percent. This recalculated value shall be used to determine compliance with the relative accuracy specification.

(2) For Method 5 or 5B, Method 17 may be used at facilities with or without wet FGD systems if the stack gas temperature at the sampling location does not exceed an average temperature of 160 °C (320 °F). The procedures of sections 2.1 and 2.3 of Method 5B may be used with Method 17 only if it is used after wet FGD systems. Method 17 shall not be used after wet FGD systems if the effluent gas is saturated or laden with water droplets.

(3) Particulate matter and SO_2 may be determined simultaneously with the Method 5 train provided that the following changes are made:

(i) The filter and impinger apparatus in sections 2.1.5 and 2.1.6 of Method 8 is used in place of the condenser (section 2.1.7) of Method 5.

(ii) All applicable procedures in Method 8 for the determination of SO_2 (including moisture) are used:

(4) For Method 6, Method 6C may be used. Method 6A may also be used whenever Methods 6 and 3B data are specified to determine the SO_2 emission rate, under the conditions in paragraph (d)(1) of this section.

(5) For Method 7, Method 7A, 7C, 7D, or 7E may be used. If Method 7C, 7D, or 7E is used, the sampling time for each run shall be at least 1 hour and the integrated sampling approach shall be used to determine the O_2 concentration ($\%O_2$) for the emission rate correction factor.

(6) For Method 3, Method 3A or 3B may be used.

(7) For Method 3B, Method 3A may be used.

[54 FR 6662, Feb. 14, 1989; 54 FR 21344, May 17, 1989, as amended at 55 FR 5212, Feb. 14, 1990]

APPENDIX B

Boilers

Code of Federal Regulations
Title 40 - Protection of the Environment
Part 60 - New Source Performance Standards (NSPS)

Subpart Da

Standards of Performance for Electric Utility Steam Generating Units for Which Construction Is Commenced After September 18, 1978

1997

Subpart Da—Standards of Performance for Electric Utility Steam Generating Units for Which Construction Is Commenced After September 18, 1978

SOURCE: 44 FR 33613, June 11, 1979, unless otherwise noted.

§ 60.40a Applicability and designation of affected facility.

(a) The affected facility to which this subpart applies is each electric utility steam generating unit:

(1) That is capable of combusting more than 73 megawatts (250 million Btu/hour) heat input of fossil fuel (either alone or in combination with any other fuel); and

(2) For which construction or modification is commenced after September 18, 1978.

(b) This subpart applies to electric utility combined cycle gas turbines that are capable of combusting more than 73 megawatts (250 million Btu/hour) heat input of fossil fuel in the steam generator. Only emissions resulting from combustion of fuels in the steam generating unit are subject to this subpart. (The gas turbine emissions are subject to subpart GG.)

(c) Any change to an existing fossil-fuel-fired steam generating unit to accommodate the use of combustible materials, other than fossil fuels, shall not bring that unit under the applicability of this subpart.

(d) Any change to an existing steam generating unit originally designed to fire gaseous or liquid fossil fuels, to accommodate the use of any other fuel (fossil or nonfossil) shall not bring that unit under the applicability of this subpart.

§ 60.41a Definitions.

As used in this subpart, all terms not defined herein shall have the meaning given them in the Act and in subpart A of this part.

Steam generating unit means any furnace, boiler, or other device used for combusting fuel for the purpose of producing steam (including fossil-fuel-fired steam generators associated with combined cycle gas turbines; nuclear steam generators are not included).

Electric utility steam generating unit means any steam electric generating unit that is constructed for the purpose of supplying more than one-third of its potential electric output capacity and more than 25 MW electrical output to any utility power distribution system for sale. Any steam supplied to a steam distribution system for the purpose of providing steam to a steam-electric generator that would produce electrical energy for sale is also considered in determining the electrical energy output capacity of the affected facility.

Fossil fuel means natural gas, petroleum, coal, and any form of solid, liquid, or gaseous fuel derived from such material for the purpose of creating useful heat.

Subbituminous coal means coal that is classified as subbituminous A, B, or C according to the American Society of Testing and Materials (ASTM) Standard Specification for Classification of Coals by Rank D388–77 (incorporated by reference—see §60.17).

Lignite means coal that is classified as lignite A or B according to the American Society of Testing and Materials' (ASTM) Standard Specification for Classification of Coals by Rank D388–77 (incorporated by reference—see §60.17).

Coal refuse means waste products of coal mining, physical coal cleaning, and coal preparation operations (e.g. culm, gob, etc.) containing coal, matrix material, clay, and other organic and inorganic material.

Potential combustion concentration means the theoretical emissions (ng/J, lb/million Btu heat input) that would result from combustion of a fuel in an uncleaned state without emission control systems) and:

(a) For particulate matter is:

(1) 3,000 ng/J (7.0 lb/million Btu) heat input for solid fuel; and

(2) 75 ng/J (0.17 lb/million Btu) heat input for liquid fuels.

(b) For sulfur dioxide is determined under § 60.48a(b).

(c) For nitrogen oxides is:

(1) 290 ng/J (0.67 lb/million Btu) heat input for gaseous fuels;

(2) 310 ng/J (0.72 lb/million Btu) heat input for liquid fuels; and

(3) 990 ng/J (2.30 lb/million Btu) heat input for solid fuels.

Combined cycle gas turbine means a stationary turbine combustion system where heat from the turbine exhaust gases is recovered by a steam generating unit.

Interconnected means that two or more electric generating units are electrically tied together by a network of power transmission lines, and other power transmission equipment.

Electric utility company means the largest interconnected organization, business, or governmental entity that generates electric power for sale (e.g., a holding company with operating subsidiary companies).

Principal company means the electric utility company or companies which own the affected facility.

Neighboring company means any one of those electric utility companies with one or more electric

power interconnections to the principal company and which have geographically adjoining service areas.

Net system capacity means the sum of the net electric generating capability (not necessarily equal to rated capacity) of all electric generating equipment owned by an electric utility company (including steam generating units, internal combustion engines, gas turbines, nuclear units, hydroelectric units, and all other electric generating equipment) plus firm contractual purchases that are interconnected to the affected facility that has the malfunctioning flue gas desulfurization system. The electric generating capability of equipment under multiple ownership is prorated based on ownership unless the proportional entitlement to electric output is otherwise established by contractual arrangement.

System load means the entire electric demand of an electric utility company's service area interconnected with the affected facility that has the malfunctioning flue gas desulfurization system plus firm contractual sales to other electric utility companies. Sales to other electric utility companies (e.g., emergency power) not on a firm contractual basis may also be included in the system load when no available system capacity exists in the electric utility company to which the power is supplied for sale.

System emergency reserves means an amount of electric generating capacity equivalent to the rated capacity of the single largest electric generating unit in the electric utility company (including steam generating units, internal combustion engines, gas turbines, nuclear units, hydroelectric units, and all other electric generating equipment) which is interconnected with the affected facility that has the malfunctioning flue gas desulfurization system. The electric generating capability of equipment under multiple ownership is prorated based on ownership unless the proportional entitlement to electric output is otherwise established by contractual arrangement.

Available system capacity means the capacity determined by subtracting the system load and the system emergency reserves from the net system capacity.

Spinning reserve means the sum of the unutilized net generating capability of all units of the electric utility company that are synchronized to the power distribution system and that are capable of immediately accepting additional load. The electric generating capability of equipment under multiple ownership is prorated based on ownership unless the proportional entitlement to electric output is otherwise established by contractual arrangement.

Available purchase power means the lesser of the following:

(a) The sum of available system capacity in all neighboring companies.

(b) The sum of the rated capacities of the power interconnection devices between the principal company and all neighboring companies, minus the sum of the electric power load on these interconnections.

(c) The rated capacity of the power transmission lines between the power interconnection devices and the electric generating units (the unit in the principal company that has the malfunctioning flue gas desulfurization system and the unit(s) in the neighboring company supplying replacement electrical power) less the electric power load on these transmission lines.

Spare flue gas desulfurization system module means a separate system of sulfur dioxide emission control equipment capable of treating an amount of flue gas equal to the total amount of flue gas generated by an affected facility when operated at maximum capacity divided by the total number of nonspare flue gas desulfurization modules in the system.

Emergency condition means that period of time when:

(a) The electric generation output of an affected facility with a malfunctioning flue gas desulfurization system cannot be reduced or electrical output must be increased because:

(1) All available system capacity in the principal company interconnected with the affected facility is being operated, and

(2) All available purchase power interconnected with the affected facility is being obtained, or

(b) The electric generation demand is being shifted as quickly as possible from an affected facility with a malfunctioning flue gas desulfurization system to one or more electrical generating units held in reserve by the principal company or by a neighboring company, or

(c) An affected facility with a malfunctioning flue gas desulfurization system becomes the only available unit to maintain a part or all of the principal company's system emergency reserves and the unit is operated in spinning reserve at the lowest practical electric generation load consistent with not causing significant physical damage to the unit. If the unit is operated at a higher load to meet load demand, an emergency condition would not exist unless the conditions under (a) of this definition apply.

Electric utility combined cycle gas turbine means any combined cycle gas turbine used for electric generation that is constructed for the purpose of supplying more than one-third of its potential electric output capacity and more than 25 MW electrical output to any utility power distribution system for sale. Any steam distribution system that is constructed for the purpose of provid-

ing steam to a steam electric generator that would produce electrical power for sale is also considered in determining the electrical energy output capacity of the affected facility.

Potential electrical output capacity is defined as 33 percent of the maximum design heat input capacity of the steam generating unit (e.g., a steam generating unit with a 100–MW (340 million Btu/hr) fossil-fuel heat input capacity would have a 33–MW potential electrical output capacity). For electric utility combined cycle gas turbines the potential electrical output capacity is determined on the basis of the fossil-fuel firing capacity of the steam generator exclusive of the heat input and electrical power contribution by the gas turbine.

Anthracite means coal that is classified as anthracite according to the American Society of Testing and Materials' (ASTM) Standard Specification for Classification of Coals by Rank D388–77 (incorporated by reference—see §60.17).

Solid-derived fuel means any solid, liquid, or gaseous fuel derived from solid fuel for the purpose of creating useful heat and includes, but is not limited to, solvent refined coal, liquified coal, and gasified coal.

24-hour period means the period of time between 12:01 a.m. and 12:00 midnight.

Resource recovery unit means a facility that combusts more than 75 percent non-fossil fuel on a quarterly (calendar) heat input basis.

Noncontinental area means the State of Hawaii, the Virgin Islands, Guam, American Samoa, the Commonwealth of Puerto Rico, or the Northern Mariana Islands.

Boiler operating day means a 24-hour period during which fossil fuel is combusted in a steam generating unit for the entire 24 hours.

[44 FR 33613, June 11, 1979, as amended at 48 FR 3737, Jan. 27, 1983]

§ 60.42a Standard for particulate matter.

(a) On and after the date on which the performance test required to be conducted under § 60.8 is completed, no owner or operator subject to the provisions of this subpart shall cause to be discharged into the atmosphere from any affected facility any gases which contain particulate matter in excess of:

(1) 13 ng/J (0.03 lb/million Btu) heat input derived from the combustion of solid, liquid, or gaseous fuel;

(2) 1 percent of the potential combustion concentration (99 percent reduction) when combusting solid fuel; and

(3) 30 percent of potential combustion concentration (70 percent reduction) when combusting liquid fuel.

(b) On and after the date the particulate matter performance test required to be conducted under § 60.8 is completed, no owner or operator subject to the provisions of this subpart shall cause to be discharged into the atmosphere from any affected facility any gases which exhibit greater than 20 percent opacity (6-minute average), except for one 6-minute period per hour of not more than 27 percent opacity.

§ 60.43a Standard for sulfur dioxide.

(a) On and after the date on which the initial performance test required to be conducted under § 60.8 is completed, no owner or operator subject to the provisions of this subpart shall cause to be discharged into the atmosphere from any affected facility which combusts solid fuel or solid-derived fuel, except as provided under paragraphs (c), (d), (f) or (h) of this section, any gases which contain sulfur dioxide in excess of:

(1) 520 ng/J (1.20 lb/million Btu) heat input and 10 percent of the potential combustion concentration (90 percent reduction), or

(2) 30 percent of the potential combustion concentration (70 percent reduction), when emissions are less than 260 ng/J (0.60 lb/million Btu) heat input.

(b) On and after the date on which the initial performance test required to be conducted under § 60.8 is completed, no owner or operator subject to the provisions of this subpart shall cause to be discharged into the atmosphere from any affected facility which combusts liquid or gaseous fuels (except for liquid or gaseous fuels derived from solid fuels and as provided under paragraphs (e) or (h) of this section), any gases which contain sulfur dioxide in excess of:

(1) 340 ng/J (0.80 lb/million Btu) heat input and 10 percent of the potential combustion concentration (90 percent reduction), or

(2) 100 percent of the potential combustion concentration (zero percent reduction) when emissions are less than 86 ng/J (0.20 lb/million Btu) heat input.

(c) On and after the date on which the initial performance test required to be conducted under § 60.8 is complete, no owner or operator subject to the provisions of this subpart shall cause to be discharged into the atmosphere from any affected facility which combusts solid solvent refined coal (SRC–I) any gases which contain sulfur dioxide in excess of 520 ng/J (1.20 lb/million Btu) heat input and 15 percent of the potential combustion concentration (85 percent reduction) except as provided under paragraph (f) of this section; compliance with the emission limitation is determined on a 30-day rolling average basis and compliance with the percent reduction requirement is determined on a 24-hour basis.

(d) Sulfur dioxide emissions are limited to 520 ng/J (1.20 lb/million Btu) heat input from any affected facility which:

(1) Combusts 100 percent anthracite,

(2) Is classified as a resource recovery facility, or

(3) Is located in a noncontinental area and combusts solid fuel or solid-derived fuel.

(e) Sulfur dioxide emissions are limited to 340 ng/J (0.80 lb/million Btu) heat input from any affected facility which is located in a noncontinental area and combusts liquid or gaseous fuels (excluding solid-derived fuels).

(f) The emission reduction requirements under this section do not apply to any affected facility that is operated under an SO_2 commercial demonstration permit issued by the Administrator in accordance with the provisions of § 60.45a.

(g) Compliance with the emission limitation and percent reduction requirements under this section are both determined on a 30-day rolling average basis except as provided under paragraph (c) of this section.

(h) When different fuels are combusted simultaneously, the applicable standard is determined by proration using the following formula:

(1) If emissions of sulfur dioxide to the atmosphere are greater than 260 ng/J (0.60 lb/million Btu) heat input

$E_s=(340x+520\ y)/100$ and
$\%P_s=10$

(2) If emissions of sulfur dioxide to the atmosphere are equal to or less than 260 ng/J (0.60 lb/million Btu) heat input:

$E_s=(340x+520\ y)/100$ and
$\%P_s=(10x+30\ y)/100$

where:

E_s is the prorated sulfur dioxide emission limit (ng/J heat input),

$\%P_s$ is the percentage of potential sulfur dioxide emission allowed.

x is the percentage of total heat input derived from the combustion of liquid or gaseous fuels (excluding solid-derived fuels)

y is the percentage of total heat input derived from the combustion of solid fuel (including solid-derived fuels)

[44 FR 33613, June 11, 1979, as amended at 54 FR 6663, Feb. 14, 1989; 54 FR 21344, May 17, 1989]

§ 60.44a Standard for nitrogen oxides.

(a) On and after the date on which the initial performance test required to be conducted under § 60.8 is completed, no owner or operator subject to the provisions of this subpart shall cause to be discharged into the atmosphere from any affected facility, except as provided under paragraph (b) of this section, any gases which contain nitrogen oxides in excess of the following emission limits, based on a 30-day rolling average.

(1) *NO_x emission limits.*

Fuel type	Emission limit for heat input	
	ng/J	(lb/million Btu)
Gaseous fuels:		
Coal-derived fuels	210	0.50
All other fuels	86	0.20
Liquid fuels:		
Coal-derived fuels	210	0.50
Shale oil	210	0.50
All other fuels	130	0.30
Solid fuels:		
Coal-derived fuels	210	0.50
Any fuel containing more than 25%, by weight, coal refuse	(1)	(1)
Any fuel containing more than 25%, by weight, lignite if the lignite is mined in North Dakota, South Dakota, or Montana, and is combusted in a slag tap furnace[2]	340	0.80
Any fuel containing more than 25%, by weight, lignite not subject to the 340 ng/J heat input emission limit[2]..		
Subbituminous coal	210	0.50
Bituminous coal	260	0.60
Anthracite coal	260	0.60
All other fuels	260	0.60

[1] Exempt from NO_x standards and NO_x monitoring requirements.

[2] Any fuel containing less than 25%, by weight, lignite is not prorated but its percentage is added to the percentage of the predominant fuel.

(2) *NO_x reduction requirement.*

Fuel type	Percent reduction of potential combustion concentration
Gaseous fuels	25
Liquid fuels	30
Solid fuels	65

(b) The emission limitations under paragraph (a) of this section do not apply to any affected facility which is combusting coal-derived liquid fuel and is operating under a commercial demonstration permit issued by the Administrator in accordance with the provisions of § 60.45a.

(c) When two or more fuels are combusted simultaneously, the applicable standard is determined by proration using the following formula:

$E_n=[86\ w+130x+210\ y+260\ z+340\ v]/100$

where:

E_n is the applicable standard for nitrogen oxides when multiple fuels are combusted simultaneously (ng/J heat input);

w is the percentage of total heat input derived from the combustion of fuels subject to the 86 ng/J heat input standard;

x is the percentage of total heat input derived from the combustion of fuels subject to the 130 ng/J heat input standard;

y is the percentage of total heat input derived from the combustion of fuels subject to the 210 ng/J heat input standard;

z is the percentage of total heat input derived from the combustion of fuels subject to the 260 ng/J heat input standard; and

v is the percentage of total heat input delivered from the combustion of fuels subject to the 340 ng/J heat input standard.

[44 FR 33613, June 11, 1979, as amended at 54 FR 6664, Feb. 14, 1989]

§ 60.45a Commercial demonstration permit.

(a) An owner or operator of an affected facility proposing to demonstrate an emerging technology may apply to the Administrator for a commercial demonstration permit. The Administrator will issue a commercial demonstration permit in accordance with paragraph (e) of this section. Commercial demonstration permits may be issued only by the Administrator, and this authority will not be delegated.

(b) An owner or operator of an affected facility that combusts solid solvent refined coal (SRC–I) and who is issued a commercial demonstration permit by the Administrator is not subject to the SO_2 emission reduction requirements under § 60.43a(c) but must, as a minimum, reduce SO_2 emissions to 20 percent of the potential combustion concentration (80 percent reduction) for each 24-hour period of steam generator operation and to less than 520 ng/J (1.20 lb/million Btu) heat input on a 30-day rolling average basis.

(c) An owner or operator of a fluidized bed combustion electric utility steam generator (atmospheric or pressurized) who is issued a commercial demonstration permit by the Administrator is not subject to the SO_2 emission reduction requirements under § 60.43a(a) but must, as a minimum, reduce SO_2 emissions to 15 percent of the potential combustion concentration (85 percent reduction) on a 30-day rolling average basis and to less than 520 ng/J (1.20 lb/million Btu) heat input on a 30-day rolling average basis.

(d) The owner or operator of an affected facility that combusts coal-derived liquid fuel and who is issued a commercial demonstration permit by the Administrator is not subject to the applicable NO_x emission limitation and percent reduction under § 60.44a(a) but must, as a minimum, reduce emissions to less than 300 ng/J (0.70 lb/million Btu) heat input on a 30-day rolling average basis.

(e) Commercial demonstration permits may not exceed the following equivalent MW electrical generation capacity for any one technology category, and the total equivalent MW electrical generation capacity for all commercial demonstration plants may not exceed 15,000 MW.

Technology	Pollutant	Equivalent electrical capacity (MW electrical output)
Solid solvent refined coal (SRC I)	SO_2	6,000–10,000
Fluidized bed combustion (atmospheric)	SO_2	400–3,000
Fluidized bed combustion (pressurized)	SO_2	400–1,200
Coal liquification	NO_x	750–10,000
Total allowable for all technologies		15,000

§ 60.46a Compliance provisions.

(a) Compliance with the particulate matter emission limitation under § 60.42a(a)(1) constitutes compliance with the percent reduction requirements for particulate matter under § 60.42a(a)(2) and (3).

(b) Compliance with the nitrogen oxides emission limitation under § 60.44a(a) constitutes compliance with the percent reduction requirements under § 60.44a(a)(2).

(c) The particulate matter emission standards under § 60.42a and the nitrogen oxides emission standards under § 60.44a apply at all times except during periods of startup, shutdown, or malfunction. The sulfur dioxide emission standards under § 60.43a apply at all times except during periods of startup, shutdown, or when both emergency conditions exist and the procedures under paragraph (d) of this section are implemented.

(d) During emergency conditions in the principal company, an affected facility with a malfunctioning flue gas desulfurization system may be operated if sulfur dioxide emissions are minimized by:

(1) Operating all operable flue gas desulfurization system modules, and bringing back into operation any malfunctioned module as soon as repairs are completed,

(2) Bypassing flue gases around only those flue gas desulfurization system modules that have been taken out of operation because they were incapable of any sulfur dioxide emission reduction or which would have suffered significant physical damage if they had remained in operation, and

(3) Designing, constructing, and operating a spare flue gas desulfurization system module for an affected facility larger than 365 MW (1,250 million Btu/hr) heat input (approximately 125 MW electrical output capacity). The Administrator may at his discretion require the owner or operator within 60 days of notification to demonstrate spare module capability. To demonstrate this capability, the owner or operator must demonstrate compli-

ance with the appropriate requirements under paragraph (a), (b), (d), (e), and (h) under § 60.43a for any period of operation lasting from 24 hours to 30 days when:

(i) Any one flue gas desulfurization module is not operated,

(ii) The affected facility is operating at the maximum heat input rate,

(iii) The fuel fired during the 24-hour to 30-day period is representative of the type and average sulfur content of fuel used over a typical 30-day period, and

(iv) The owner or operator has given the Administrator at least 30 days notice of the date and period of time over which the demonstration will be performed.

(e) After the initial performance test required under § 60.8, compliance with the sulfur dioxide emission limitations and percentage reduction requirements under § 60.43a and the nitrogen oxides emission limitations under § 60.44a is based on the average emission rate for 30 successive boiler operating days. A separate performance test is completed at the end of each boiler operating day after the initial performance test, and a new 30 day average emission rate for both sulfur dioxide and nitrogen oxides and a new percent reduction for sulfur dioxide are calculated to show compliance with the standards.

(f) For the initial performance test required under § 60.8, compliance with the sulfur dioxide emission limitations and percent reduction requirements under § 60.43a and the nitrogen oxides emission limitation under § 60.44a is based on the average emission rates for sulfur dioxide, nitrogen oxides, and percent reduction for sulfur dioxide for the first 30 successive boiler operating days. The initial performance test is the only test in which at least 30 days prior notice is required unless otherwise specified by the Administrator. The initial performance test is to be scheduled so that the first boiler operating day of the 30 successive boiler operating days is completed within 60 days after achieving the maximum production rate at which the affected facility will be operated, but not later than 180 days after initial startup of the facility.

(g) Compliance is determined by calculating the arithmetic average of all hourly emission rates for SO_2 and NO_x for the 30 successive boiler operating days, except for data obtained during startup, shutdown, malfunction (NO_x only), or emergency conditions (SO_2 only). Compliance with the percentage reduction requirement for SO_2 is determined based on the average inlet and average outlet SO_2 emission rates for the 30 successive boiler operating days.

(h) If an owner or operator has not obtained the minimum quantity of emission data as required under § 60.47a of this subpart, compliance of the affected facility with the emission requirements under §§ 60.43a and 60.44a of this subpart for the day on which the 30-day period ends may be determined by the Administrator by following the applicable procedures in section 7 of Method 19.

[44 FR 33613, June 11, 1979, as amended at 54 FR 6664, Feb. 14, 1989]

§ 60.47a Emission monitoring.

(a) The owner or operator of an affected facility shall install, calibrate, maintain, and operate a continuous monitoring system, and record the output of the system, for measuring the opacity of emissions discharged to the atmosphere, except where gaseous fuel is the only fuel combusted. If opacity interference due to water droplets exists in the stack (for example, from the use of an FGD system), the opacity is monitored upstream of the interference (at the inlet to the FGD system). If opacity interference is experienced at all locations (both at the inlet and outlet of the sulfur dioxide control system), alternate parameters indicative of the particulate matter control system's performance are monitored (subject to the approval of the Administrator).

(b) The owner or operator of an affected facility shall install, calibrate, maintain, and operate a continuous monitoring system, and record the output of the system, for measuring sulfur dioxide emissions, except where natural gas is the only fuel combusted, as follows:

(1) Sulfur dioxide emissions are monitored at both the inlet and outlet of the sulfur dioxide control device.

(2) For a facility which qualifies under the provisions of § 60.43a(d), sulfur dioxide emissions are only monitored as discharged to the atmosphere.

(3) An "as fired" fuel monitoring system (upstream of coal pulverizers) meeting the requirements of Method 19 (appendix A) may be used to determine potential sulfur dioxide emissions in place of a continuous sulfur dioxide emission monitor at the inlet to the sulfur dioxide control device as required under paragraph (b)(1) of this section.

(c) The owner or operator of an affected facility shall install, calibrate, maintain, and operate a continuous monitoring system, and record the output of the system, for measuring nitrogen oxides emissions discharged to the atmosphere.

(d) The owner or operator of an affected facility shall install, calibrate, maintain, and operate a continuous monitoring system, and record the output of the system, for measuring the oxygen or carbon dioxide content of the flue gases at each location where sulfur dioxide or nitrogen oxides emissions are monitored.

(e) The continuous monitoring systems under paragraphs (b), (c), and (d) of this section are operated and data recorded during all periods of operation of the affected facility including periods of startup, shutdown, malfunction or emergency conditions, except for continuous monitoring system breakdowns, repairs, calibration checks, and zero and span adjustments.

(f) The owner or operator shall obtain emission data for at least 18 hours in at least 22 out of 30 successive boiler operating days. If this minimum data requirement cannot be met with a continuous monitoring system, the owner or operator shall supplement emission data with other monitoring systems approved by the Administrator or the reference methods and procedures as described in paragraph (h) of this section.

(g) The 1-hour averages required under paragraph § 60.13(h) are expressed in ng/J (lbs/million Btu) heat input and used to calculate the average emission rates under § 60.46a. The 1-hour averages are calculated using the data points required under § 60.13(b). At least two data points must be used to calculate the 1-hour averages.

(h) When it becomes necessary to supplement continuous monitoring system data to meet the minimum data requirements in paragraph (f) of this section, the owner or operator shall use the reference methods and procedures as specified in this paragraph. Acceptable alternative methods and procedures are given in paragraph (j) of this section.

(1) Method 6 shall be used to determine the SO_2 concentration at the same location as the SO_2 monitor. Samples shall be taken at 60-minute intervals. The sampling time and sample volume for each sample shall be at least 20 minutes and 0.020 dscm (0.71 dscf). Each sample represents a 1-hour average.

(2) Method 7 shall be used to determine the NO_x concentration at the same location as the NO_x monitor. Samples shall be taken at 30-minute intervals. The arithmetic average of two consecutive samples represents a 1-hour average.

(3) The emission rate correction factor, integrated bag sampling and analysis procedure of Method 3B shall be used to determine the O_2 or CO_2 concentration at the same location as the O_2 or CO_2 monitor. Samples shall be taken for at least 309 minutes in each hour. Each sample represents a 1-hour average.

(4) The procedures in Method 19 shall be used to compute each 1-hour average concentration in ng/J (1b/million Btu) heat input.

(i) The owner or operator shall use methods and procedures in this paragraph to conduct monitoring system performance evaluations under § 60.13(c) and calibration checks under § 60.13(d). Acceptable alternative methods and procedures are given in paragraph (j) of this section.

(1) Methods 6, 7, and 3B, as applicable, shall be used to determine O_2, SO_2, and NO_x concentrations.

(2) SO_2 or NO_x (NO), as applicable, shall be used for preparing the calibration gas mixtures (in N_2, as applicable) under Performance Specification 2 of appendix B of this part.

(3) For affected facilities burning only fossil fuel, the span value for a continuous monitoring system for measuring opacity is between 60 and 80 percent and for a continuous monitoring system measuring nitrogen oxides is determined as follows:

Fossil fuel	Span value for nitrogen oxides (ppm)
Gas	500
Liquid	500
Solid	1,000
Combination	500 (x+y)+1,000z

where:

x is the fraction of total heat input derived from gaseous fossil fuel,

y is the fraction of total heat input derived from liquid fossil fuel, and

z is the fraction of total heat input derived from solid fossil fuel.

(4) All span values computed under paragraph (b)(3) of this section for burning combinations of fossil fuels are rounded to the nearest 500 ppm.

(5) For affected facilities burning fossil fuel, alone or in combination with non-fossil fuel, the span value of the sulfur dioxide continuous monitoring system at the inlet to the sulfur dioxide control device is 125 percent of the maximum estimated hourly potential emissions of the fuel fired, and the outlet of the sulfur dioxide control device is 50 percent of maximum estimated hourly potential emissions of the fuel fired.

(j) The owner or operator may use the following as alternatives to the reference methods and procedures specified in this section:

(1) For Method 6, Method 6A or 6B (whenever Methods 6 and 3 or 3B data are used) or 6C may be used. Each Method 6B sample obtained over 24 hours represents 24 1-hour averages. If Method 6A or 6B is used under paragraph (i) of this section, the conditions under § 60.46(d)(1) apply; these conditions do not apply under paragraph (h) of this section.

(2) For Method 7, Method 7A, 7C, 7D, or 7E may be used. If Method 7C, 7D, or 7E is used, the sampling time for each run shall be 1 hour.

(3) For Method 3, Method 3A or 3B may be used if the sampling time is 1 hour.

(4) For Method 3B, Method 3A may be used.

[44 FR 33613, June 11, 1979, as amended at 54 FR 6664, Feb. 14, 1989; 55 FR 5212, Feb. 14, 1990; 55 FR 18876, May 7, 1990]

§ 60.48a Compliance determination procedures and methods.

(a) In conducting the performance tests required in § 60.8, the owner or operator shall use as reference methods and procedures the methods in appendix A of this part or the methods and procedures as specified in this section, except as provided in § 60.8(b). Section 60.8(f) does not apply to this section for SO_2 and NO_x. Acceptable alternative methods are given in paragraph (e) of this section.

(b) The owner or operator shall determine compliance with the particulate matter standards in § 60.42a as follows:

(1) The dry basis F factor (O_2) procedures in Method 19 shall be used to compute the emission rate of particulate matter.

(2) For the particular matter concentration, Method 5 shall be used at affected facilities without wet FGD systems and Method 5B shall be used after wet FGD systems.

(i) The sampling time and sample volume for each run shall be at least 120 minutes and 1.70 dscm (60 dscf). The probe and filter holder heating system in the sampling train may be set to provide an average gas temperature of no greater than 160±14 °C (320±25 °F).

(ii) For each particulate run, the emission rate correction factor, integrated or grab sampling and analysis procedures of Method 3B shall be used to determine the O_2 concentration. The O_2 sample shall be obtained simultaneously with, and at the same traverse points as, the particulate run. If the particulate run has more than 12 traverse points, the O_2 traverse points may be reduced to 12 provided that Method 1 is used to locate the 12 O_2 traverse points. If the grab sampling procedure is used, the O_2 concentration for the run shall be the arithmetic mean of all the individual O_2 concentrations at each traverse point.

(3) Method 9 and the procedures in § 60.11 shall be used to determine opacity.

(c) The owner or operator shall determine compliance with the SO_2 standards in § 60.43a as follows:

(1) The percent of potential SO_2 emissions ($\%P_s$) to the atmosphere shall be computed using the following equation:

$$\%P_s=[(100-\%R_f)\ (100-\%R_g)]/100$$

where:

$\%P_s$=percent of potential SO_2 emissions, percent.

$\%R_f$=percent reduction from fuel pretreatment, percent.

$\%R_g$=percent reduction by SO_2 control system, percent.

(2) The procedures in Method 19 may be used to determine percent reduction ($\%R_f$) of sulfur by such processes as fuel pretreatment (physical coal cleaning, hydrodesulfurization of fuel oil, etc.), coal pulverizers, and bottom and flyash interactions. This determination is optional.

(3) The procedures in Method 19 shall be used to determine the percent SO_2 reduction ($\%R_g$ of any SO_2 control system. Alternatively, a combination of an "as fired" fuel monitor and emission rates measured after the control system, following the procedures in Method 19, may be used if the percent reduction is calculated using the average emission rate from the SO_2 control device and the average SO_2 input rate from the "as fired" fuel analysis for 30 successive boiler operating days.

(4) The appropriate procedures in Method 19 shall be used to determine the emission rate.

(5) The continuous monitoring system in § 60.47a (b) and (d) shall be used to determine the concentrations of SO_2 and CO_2 or O_2.

(d) The owner or operator shall determine compliance with the NO_x standard in § 60.44a as follows:

(1) The appropriate procedures in Method 19 shall be used to determine the emission rate of NO_x.

(2) The continous monitoring system in § 60.47a (c) and (d) shall be used to determine the concentrations of NO_x and CO_2 or O_2.

(e) The owner or operator may use the following as alternatives to the reference methods and procedures specified in this section:

(1) For Method 5 or 5B, Method 17 may be used at facilities with or without wet FGD systems if the stack temperature at the sampling location does not exceed an average temperature of 160 °C (320 °F). The procedures of §§ 2.1 and 2.3 of Method 5B may be used in Method 17 only if it is used after wet FGD systems. Method 17 shall not be used after wet FGD systems if the effluent is saturated or laden with water droplets.

(2) The F_c factor (CO_2) procedures in Method 19 may be used to compute the emission rate of particulate matter under the stipulations of § 60.46(d)(1). The CO_2 shall be determined in the same manner as the O_2 concentration.

(f) Electric utility combined cycle gas turbines are performance tested for particulate matter, sulfur dioxide, and nitrogen oxides using the procedures of Method 19 (appendix A). The sulfur dioxide and nitrogen oxides emission rates from the gas turbine used in Method 19 (appendix A) calculations are determined when the gas turbine is performance tested under subpart GG. The potential uncontrolled particulate matter emission rate

from a gas turbine is defined as 17 ng/J (0.04 lb/million Btu) heat input.

[44 FR 33613, June 11, 1979, as amended at 54 FR 6664, Feb. 14, 1989; 55 FR 5212, Feb. 14, 1990]

§ 60.49a Reporting requirements.

(a) For sulfur dioxide, nitrogen oxides, and particulate matter emissions, the performance test data from the initial performance test and from the performance evaluation of the continuous monitors (including the transmissometer) are submitted to the Administrator.

(b) For sulfur dioxide and nitrogen oxides the following information is reported to the Administrator for each 24-hour period.

(1) Calendar date.

(2) The average sulfur dioxide and nitrogen oxide emission rates (ng/J or lb/million Btu) for each 30 successive boiler operating days, ending with the last 30-day period in the quarter; reasons for non-compliance with the emission standards; and, description of corrective actions taken.

(3) Percent reduction of the potential combustion concentration of sulfur dioxide for each 30 successive boiler operating days, ending with the last 30-day period in the quarter; reasons for non-compliance with the standard; and, description of corrective actions taken.

(4) Identification of the boiler operating days for which pollutant or dilutent data have not been obtained by an approved method for at least 18 hours of operation of the facility; justification for not obtaining sufficient data; and description of corrective actions taken.

(5) Identification of the times when emissions data have been excluded from the calculation of average emission rates because of startup, shutdown, malfunction (NO_x only), emergency conditions (SO_2 only), or other reasons, and justification for excluding data for reasons other than startup, shutdown, malfunction, or emergency conditions.

(6) Identification of "F" factor used for calculations, method of determination, and type of fuel combusted.

(7) Identification of times when hourly averages have been obtained based on manual sampling methods.

(8) Identification of the times when the pollutant concentration exceeded full span of the continuous monitoring system.

(9) Description of any modifications to the continuous monitoring system which could affect the ability of the continuous monitoring system to comply with Performance Specifications 2 or 3.

(c) If the minimum quantity of emission data as required by § 60.47a is not obtained for any 30 successive boiler operating days, the following information obtained under the requirements of § 60.46a(h) is reported to the Administrator for that 30-day period:

(1) The number of hourly averages available for outlet emission rates (n_o) and inlet emission rates (n_i) as applicable.

(2) The standard deviation of hourly averages for outlet emission rates (s_o) and inlet emission rates (s_i) as applicable.

(3) The lower confidence limit for the mean outlet emission rate (E_o*) and the upper confidence limit for the mean inlet emission rate (E_i*) as applicable.

(4) The applicable potential combustion concentration.

(5) The ratio of the upper confidence limit for the mean outlet emission rate (E_o*) and the allowable emission rate (E_{std}) as applicable.

(d) If any standards under § 60.43a are exceeded during emergency conditions because of control system malfunction, the owner or operator of the affected facility shall submit a signed statement:

(1) Indicating if emergency conditions existed and requirements under § 60.46a(d) were met during each period, and

(2) Listing the following information:

(i) Time periods the emergency condition existed;

(ii) Electrical output and demand on the owner or operator's electric utility system and the affected facility;

(iii) Amount of power purchased from interconnected neighboring utility companies during the emergency period;

(iv) Percent reduction in emissions achieved;

(v) Atmospheric emission rate (ng/J) of the pollutant discharged; and

(vi) Actions taken to correct control system malfunction.

(e) If fuel pretreatment credit toward the sulfur dioxide emission standard under § 60.43a is claimed, the owner or operator of the affected facility shall submit a signed statement:

(1) Indicating what percentage cleaning credit was taken for the calendar quarter, and whether the credit was determined in accordance with the provisions of § 60.48a and Method 19 (appendix A); and

(2) Listing the quantity, heat content, and date each pretreated fuel shipment was received during the previous quarter; the name and location of the fuel pretreatment facility; and the total quantity and total heat content of all fuels received at the affected facility during the previous quarter.

(f) For any periods for which opacity, sulfur dioxide or nitrogen oxides emissions data are not available, the owner or operator of the affected facility shall submit a signed statement indicating if any changes were made in operation of the emission control system during the period of data un-

availability. Operations of the control system and affected facility during periods of data unavailability are to be compared with operation of the control system and affected facility before and following the period of data unavailability.

(g) The owner or operator of the affected facility shall submit a signed statement indicating whether:

(1) The required continuous monitoring system calibration, span, and drift checks or other periodic audits have or have not been performed as specified.

(2) The data used to show compliance was or was not obtained in accordance with approved methods and procedures of this part and is representative of plant performance.

(3) The minimum data requirements have or have not been met; or, the minimum data requirements have not been met for errors that were unavoidable.

(4) Compliance with the standards has or has not been achieved during the reporting period.

(h) For the purposes of the reports required under § 60.7, periods of excess emissions are defined as all 6-minute periods during which the average opacity exceeds the applicable opacity standards under § 60.42a(b). Opacity levels in excess of the applicable opacity standard and the date of such excesses are to be submitted to the Administrator each calendar quarter.

(i) The owner or operator of an affected facility shall submit the written reports required under this section and subpart A to the Administrator for every calendar quarter. All quarterly reports shall be postmarked by the 30th day following the end of each calendar quarter.

APPENDIX C

Boilers

Code of Federal Regulations
Title 40 - Protection of the Environment
Part 60 - New Source Performance Standards (NSPS)

Subpart Db

Standards of Performance for Industrial - Commercial - Institutional Steam Generating Units

1997

Subpart Db—Standards of Performance for Industrial-Commercial-Institutional Steam Generating Units

SOURCE: 52 FR 47842, Dec. 16, 1987, unless otherwise noted.

§ 60.40b Applicability and delegation of authority.

(a) The affected facility to which this subpart applies is each steam generating unit that commences construction, modification, or reconstruction after June 19, 1984, and that has a heat input capacity from fuels combusted in the steam generating unit of greater than 29 MW (100 million Btu/hour).

(b) Any affected facility meeting the applicability requirements under paragraph (a) of this section and commencing construction, modification, or reconstruction after June 19, 1984, but on or before June 19, 1986, is subject to the following standards:

(1) Coal-fired affected facilities having a heat input capacity between 29 and 73 MW (100 and 250 million Btu/hour), inclusive, are subject to the particulate matter and nitrogen oxides standards under this subpart.

(2) Coal-fired affected facilities having a heat input capacity greater than 73 MW (250 million Btu/hour) and meeting the applicability requirements under subpart D (Standards of performance for fossil-fuel-fired steam generators; § 60.40) are subject to the particulate matter and nitrogen oxides standards under this subpart and to the sulfur dioxide standards under subpart D (§ 60.43).

(3) Oil-fired affected facilities having a heat input capacity between 29 and 73 MW (100 and 250 million Btu/hour), inclusive, are subject to the nitrogen oxides standards under this subpart.

(4) Oil-fired affected facilities having a heat input capacity greater than 73 MW (250 million Btu/hour) and meeting the applicability requirements under subpart D (Standards of performance for fossil-fuel-fired steam generators; § 60.40) are also subject to the nitrogen oxides standards under this subpart and the particulate matter and sulfur dioxide standards under subpart D (§ 60.42 and § 60.43).

(c) Affected facilities which also meet the applicability requirements under subpart J (Standards of performance for petroleum refineries; § 60.104) are subject to the particulate matter and nitrogen oxides standards under this subpart and the sulfur dioxide standards under subpart J (§ 60.104).

(d) Affected facilities which also meet the applicability requirements under subpart E (Standards of performance for incinerators; § 60.50) are subject to the nitrogen oxides and particulate matter standards under this subpart.

(e) Steam generating units meeting the applicability requirements under subpart Da (Standards of performance for electric utility steam generating units; § 60.40a) are not subject to this subpart.

(f) Any change to an existing steam generating unit for the sole purpose of combusting gases containing TRS as defined under § 60.281 is not considered a modification under § 60.14 and the steam generating unit is not subject to this subpart.

(g) In delegating implementation and enforcement authority to a State under section 111(c) of the Act, the following authorities shall be retained by the Administrator and not transferred to a State.

(1) Section 60.44b(f).

(2) Section 60.44b(g).

(3) Section 60.49b(a)(4).

§ 60.41b Definitions.

As used in this subpart, all terms not defined herein shall have the meaning given them in the Act and in subpart A of this part.

Annual capacity factor means the ratio between the actual heat input to a steam generating unit from the fuels listed in § 60.42b(a), § 60.43b(a), or § 60.44b(a), as applicable, during a calendar year and the potential heat input to the steam generating unit had it been operated for 8,760 hours during a calendar year at the maximum steady state design heat input capacity. In the case of steam generating units that are rented or leased, the actual heat input shall be determined based on the combined heat input from all operations of the affected facility in a calendar year.

Byproduct/waste means any liquid or gaseous substance produced at chemical manufacturing plants or petroleum refineries (except natural gas, distillate oil, or residual oil) and combusted in a steam generating unit for heat recovery or for disposal. Gaseous substances with carbon dioxide levels greater than 50 percent or carbon monoxide levels greater than 10 percent are not byproduct/waste for the purposes of this subpart.

Chemical manufacturing plants means industrial plants which are classified by the Department of Commerce under Standard Industrial Classification (SIC) Code 28.

Coal means all solid fuels classified as anthracite, bituminous, subbituminous, or lignite by the American Society of Testing and Materials in ASTM D388–77, Standard Specification for Classification of Coals by Rank (IBR—see § 60.17), coal refuse, and petroleum coke. Coal-derived synthetic fuels, including but not limited to solvent refined coal, gasified coal, coal-oil mixtures, and coal-water mixtures, are also included in this definition for the purposes of this subpart.

Coal refuse means any byproduct of coal mining or coal cleaning operations with an ash content greater than 50 percent, by weight, and a heating value less than 13,900 kJ/kg (6,000 Btu/lb) on a dry basis.

Combined cycle system means a system in which a separate source, such as a gas turbine, internal combustion engine, kiln, etc., provides exhaust gas to a heat recovery steam generating unit.

Conventional technology means wet flue gas desulfurization (FGD) technology, dry FGD technology, atmospheric fluidized bed combustion technology, and oil hydrodesulfurization technology.

Distillate oil means fuel oils that contain 0.05 weight percent nitrogen or less and comply with the specifications for fuel oil numbers 1 and 2, as defined by the American Society of Testing and Materials in ASTM D396–78, Standard Specifications for Fuel Oils (incorporated by reference—see § 60.17).

Dry flue gas desulfurization technology means a sulfur dioxide control system that is located downstream of the steam generating unit and removes sulfur oxides from the combustion gases of the steam generating unit by contacting the combustion gases with an alkaline slurry or solution and forming a dry powder material. This definition includes devices where the dry powder material is subsequently converted to another form. Alkaline slurries or solutions used in dry flue gas desulfurization technology–include but are not limited to lime and sodium.

Duct burner means a device that combusts fuel and that is placed in the exhaust duct from another source, such as a stationary gas turbine, internal combustion engine, kiln, etc., to allow the firing of additional fuel to heat the exhaust gases before the exhaust gases enter a heat recovery steam generating unit.

Emerging technology means any sulfur dioxide control system that is not defined as a conventional technology under this section, and for which the owner or operator of the facility has applied to the Administrator and received approval to operate as an emerging technology under § 60.49b(a)(4).

Federally enforceable means all limitations and conditions that are enforceable by the Administrator, including the requirements of 40 CFR parts 60 and 61, requirements within any applicable State Implementation Plan, and any permit requirements established under 40 CFR 52.21 or under 40 CFR 51.18 and 40 CFR 51.24.

Fluidized bed combustion technology means combustion of fuel in a bed or series of beds (including but not limited to bubbling bed units and circulating bed units) of limestone aggregate (or other sorbent materials) in which these materials are forced upward by the flow of combustion air and the gaseous products of combustion.

Fuel pretreatment means a process that removes a portion of the sulfur in a fuel before combustion of the fuel in a steam generating unit.

Full capacity means operation of the steam generating unit at 90 percent or more of the maximum steady-state design heat input capacity.

Heat input means heat derived from combustion of fuel in a steam generating unit and does not include the heat input from preheated combustion air, recirculated flue gases, or exhaust gases from other sources, such as gas turbines, internal combustion engines, kilns, etc.

Heat release rate means the steam generating unit design heat input capacity (in MW or Btu/hour) divided by the furnace volume (in cubic meters or cubic feet); the furnace volume is that volume bounded by the front furnace wall where the burner is located, the furnace side waterwall, and extending to the level just below or in front of the first row of convection pass tubes.

Heat transfer medium means any material that is used to transfer heat from one point to another point.

High heat release rate means a heat release rate greater than 730,000 J/sec-m^3 (70,000 Btu/hour-ft^3).

Lignite means a type of coal classified as lignite A or lignite B by the American Society of Testing and Materials in ASTM D388–77, Standard Specification for Classification of Coals by Rank (IBR—see § 60.17).

Low heat release rate means a heat release rate of 730,000 J/sec-m^3 (70,000 Btu/hour-ft^3) or less.

Mass-feed stoker steam generating unit means a steam generating unit where solid fuel is introduced directly into a retort or is fed directly onto a grate where it is combusted.

Maximum heat input capacity means the ability of a steam generating unit to combust a stated maximum amount of fuel on a steady state basis, as determined by the physical design and characteristics of the steam generating unit.

Municipal-type solid waste means refuse, more than 50 percent of which is waste consisting of a mixture of paper, wood, yard wastes, food wastes, plastics, leather, rubber, and other combustible materials, and noncombustible materials such as glass and rock.

Natural gas means (1) a naturally occurring mixture of hydrocarbon and nonhydrocarbon gases found in geologic formations beneath the earth's surface, of which the principal constituent is methane; or (2) liquid petroleum gas, as defined by the American Society for Testing and Materials in ASTM D1835–82, "Standard Specification for Liquid Petroleum Gases" (IBR—see § 60.17).

Noncontinental area means the State of Hawaii, the Virgin Islands, Guam, American Samoa, the Commonwealth of Puerto Rico, or the Northern Mariana Islands.

Oil means crude oil or petroleum or a liquid fuel derived from crude oil or petroleum, including distillate and residual oil.

Petroleum refinery means industrial plants as classified by the Department of Commerce under Standard Industrial Classification (SIC) Code 29.

Potential sulfur dioxide emission rate means the theoretical sulfur dioxide emissions (ng/J, lb/million Btu heat input) that would result from combusting fuel in an uncleaned state and without using emission control systems.

Process heater means a device that is primarily used to heat a material to initiate or promote a chemical reaction in which the material participates as a reactant or catalyst.

Pulverized coal-fired steam generating unit means a steam generating unit in which pulverized coal is introduced into an air stream that carries the coal to the combustion chamber of the steam generating unit where it is fired in suspension. This includes both conventional pulverized coal-fired and micropulverized coal-fired steam generating units.

Residual oil means crude oil, fuel oil numbers 1 and 2 that have a nitrogen content greater than 0.05 weight percent, and all fuel oil numbers 4, 5 and 6, as defined by the American Society of Testing and Materials in ASTM D396–78, Standard Specifications for Fuel Oils (IBR—see § 60.17).

Spreader stoker steam generating unit means a steam generating unit in which solid fuel is introduced to the combustion zone by a mechanism that throws the fuel onto a grate from above. Combustion takes place both in suspension and on the grate.

Steam generating unit means a device that combusts any fuel or byproduct/waste to produce steam or to heat water or any other heat transfer medium. This term includes any municipal-type solid waste incinerator with a heat recovery steam generating unit or any steam generating unit that combusts fuel and is part of a cogeneration system or a combined cycle system. This term does not include process heaters as they are defined in this subpart.

Steam generating unit operating day means a 24-hour period between 12:00 midnight and the following midnight during which any fuel is combusted at any time in the steam generating unit. It is not necessary for fuel to be combusted continuously for the entire 24-hour period.

Very low sulfur oil means an oil that contains no more than 0.5 weight percent sulfur or that, when combusted without sulfur dioxide emission control, has a sulfur dioxide emission rate equal to or less than 215 ng/J (0.5 lb/million Btu) heat input.

Wet flue gas desulfurization technology means a sulfur dioxide control system that is located downstream of the steam generating unit and removes sulfur oxides from the combustion gases of the steam generating unit by contacting the combustion gas with an alkaline slurry or solution and forming a liquid material. This definition applies to devices where the aqueous liquid material product of this contact is subsequently converted to other forms. Alkaline reagents used in wet flue gas desulfurization technology include, but are not limited to, lime, limestone, and sodium.

Wet scrubber system means any emission control device that mixes an aqueous stream or slurry with the exhaust gases from a steam generating unit to control emissions of particulate matter or sulfur dioxide.

Wood means wood, wood residue, bark, or any derivative fuel or residue thereof, in any form, including, but not limited to, sawdust, sanderdust, wood chips, scraps, slabs, millings, shavings, and processed pellets made from wood or other forest residues.

[52 FR 47842, Dec. 16, 1987, as amended at 54 FR 51819, Dec. 18, 1989]

§ 60.42b Standard for sulfur dioxide.

(a) Except as provided in paragraphs (b), (c), (d), or (j) of this section, on and after the date on which the performance test is completed or required to be completed under § 60.8 of this part, whichever date comes first, no owner or operator of an affected facility that combusts coal or oil shall cause to be discharged into the atmosphere any gases that contain sulfur dioxide in excess of 10 percent (0.10) of the potential sulfur dioxide emission rate (90 percent reduction) and that contain sulfur dioxide in excess of the emission limit determined according to the following formula:

$$E_s=(K_aH_a+K_bH_b)/(H_a+H_b)$$

where:

E_s is the sulfur dioxide emission limit, in ng/J or lb/million Btu heat input,

K_a is 520 ng/J (or 1.2 lb/million Btu),

K_b is 340 ng/J (or 0.80 lb/million Btu),

H_a is the heat input from the combustion of coal, in J (million Btu),

H_b is the heat input from the combustion of oil, in J (million Btu).

Only the heat input supplied to the affected facility from the combustion of coal and oil is counted under this section. No credit is provided for the heat input to the affected facility from the combustion of natural gas, wood, municipal-type solid waste, or other fuels or heat input to the affected facility from exhaust gases from another source,

such as gas turbines, internal combustion engines, kilns, etc.

(b) On and after the date on which the performance test is completed or required to be completed under § 60.8 of this part, whichever comes first, no owner or operator of an affected facility that combusts coal refuse alone in a fluidized bed combustion steam generating unit shall cause to be discharged into the atmosphere any gases that contain sulfur dioxide in excess of 20 percent of the potential sulfur dioxide emission rate (80 percent reduction) and that contain sulfur dioxide in excess of 520 ng/J (1.2 lb/million Btu) heat input. If coal or oil is fired with coal refuse, the affected facility is subject to paragraph (a) or (d) of this section, as applicable.

(c) On and after the date on which the performance test is completed or is required to be completed under § 60.8 of this part, whichever comes first, no owner or operator of an affected facility that combusts coal or oil, either alone or in combination with any other fuel, and that uses an emerging technology for the control of sulfur dioxide emissions, shall cause to be discharged into the atmosphere any gases that contain sulfur dioxide in excess of 50 percent of the potential sulfur dioxide emission rate (50 percent reduction) and that contain sulfur dioxide in excess of the emission limit determined according to the following formula:

$$E_s=(K_cH_c+K_dH_d)/H_c+H_d)$$

where:

E_s is the sulfur dioxide emission limit, expressed in ng/J (lb/million Btu) heat input,

K_c is 260 ng/J (0.60 lb/million Btu),

K_d is 170 ng/J (0.40 lb/million Btu),

H_c is the heat input from the combustion of coal, J (million Btu),

H_d is the heat input from the combustion of oil, J (million Btu).

Only the heat input supplied to the affected facility from the combustion of coal and oil is counted under this section. No credit is provided for the heat input to the affected facility from the combustion of natural gas, wood, municipal-type solid waste, or other fuels, or from the heat input to the affected facility from exhaust gases from another source, such as gas turbines, internal combustion engines, kilns, etc.

(d) On and after the date on which the performance test is completed or required to be completed under § 60.8 of this part, whichever comes first, no owner or operator of an affected facility listed in paragraphs (d) (1), (2), or (3) of this section shall cause to be discharged into the atmosphere any gases that contain sulfur dioxide in excess of 520 ng/J (1.2 lb/million Btu) heat input if the affected facility combusts coal, or 215 ng/J (0.5 lb/million Btu) heat input if the affected facility combusts oil other than very low sulfur oil. Percent reduction requirements are not applicable to affected facilities under this paragraph.

(1) Affected facilities that have an annual capacity factor for coal and oil of 30 percent (0.30) or less and are subject to a Federally enforceable permit limiting the operation of the affected facility to an annual capacity factor for coal and oil of 30 percent (0.30) or less;

(2) Affected facilities located in a noncontinental area; or

(3) Affected facilities combusting coal or oil, alone or in combination with any other fuel, in a duct burner as part of a combined cycle system where 30 percent (0.30) or less of the heat input to the steam generating unit is from combustion of coal and oil in the duct burner and 70 percent (0.70) or more of the heat input to the steam generating unit is from the exhaust gases entering the duct burner.

(e) Except as provided in paragraph (f) of this section, compliance with the emission limits, fuel oil sulfur limits, and/or percent reduction requirements under this section are determined on a 30-day rolling average basis.

(f) Except as provided in paragraph (j)(2) of this section, compliance with the emission limits or fuel oil sulfur limits under this section is determined on a 24-hour average basis for affected facilities that (1) have a Federally enforceable permit limiting the annual capacity factor for oil to 10 percent or less, (2) combust only very low sulfur oil, and (3) do not combust any other fuel.

(g) Except as provided in paragraph (i) of this section, the sulfur dioxide emission limits and percent reduction requirements under this section apply at all times, including periods of startup, shutdown, and malfunction.

(h) Reductions in the potential sulfur dioxide emission rate through fuel pretreatment are not credited toward the percent reduction requirement under paragraph (c) of this section unless:

(1) Fuel pretreatment results in a 50 percent or greater reduction in potential sulfur dioxide emissions and

(2) Emissions from the pretreated fuel (without combustion or post combustion sulfur dioxide control) are equal to or less than the emission limits specified in paragraph (c) of this section.

(i) An affected facility subject to paragraph (a), (b), or (c) of this section may combust very low sulfur oil or natural gas when the sulfur dioxide control system is not being operated because of malfunction or maintenance of the sulfur dioxide control system.

(j) Percent reduction requirements are not applicable to affected facilities combusting only very low sulfur oil. The owner or operator of an affected facility combusting very low sulfur oil shall

demonstrate that the oil meets the definition of very low sulfur oil by: (1) Following the performance testing procedures as described in § 60.45b(c) or § 60.45b(d), and following the monitoring procedures as described in § 60.47b(a) or § 60.47b(b) to determine sulfur dioxide emission rate or fuel oil sulfur content; or (2) maintaining fuel receipts as described in § 60.49b(r).

[52 FR 47842, Dec. 16, 1987, as amended at 54 FR 51819, Dec. 18, 1989]

§ 60.43b Standard for particulate matter.

(a) On and after the date on which the initial performance test is completed or is required to be completed under § 60.8 of this part, whichever comes first, no owner or operator of an affected facility which combusts coal or combusts mixtures of coal with other fuels, shall cause to be discharged into the atmosphere from that affected facility any gases that contain particulate matter in excess of the following emission limits:

(1) 22 ng/J (0.05 lb/million Btu) heat input,

(i) If the affected facility combusts only coal, or

(ii) If the affected facility combusts coal and other fuels and has an annual capacity factor for the other fuels of 10 percent (0.10) or less.

(2) 43 ng/J (0.10 lb/million Btu) heat input if the affected facility combusts coal and other fuels and has an annual capacity factor for the other fuels greater than 10 percent (0.10) and is subject to a federally enforceable requirement limiting operation of the affected facility to an annual capacity factor greater than 10 percent (0.10) for fuels other than coal.

(3) 86 ng/J (0.20 lb/million Btu) heat input if the affected facility combusts coal or coal and other fuels and

(i) Has an annual capacity factor for coal or coal and other fuels of 30 percent (0.30) or less,

(ii) Has a maximum heat input capacity of 73 MW (250 million Btu/hour) or less,

(iii) Has a federally enforceable requirement limiting operation of the affected facility to an annual capacity factor of 30 percent (0.30) or less for coal or coal and other solid fuels, and

(iv) Construction of the affected facility commenced after June 19, 1984, and before November 25, 1986.

(b) On and after the date on which the performance test is completed or required to be completed under 60.8 of this part, whichever date comes first, no owner or operator of an affected facility that combusts oil (or mixtures of oil with other fuels) and uses a conventional or emerging technology to reduce sulfur dioxide emissions shall cause to be discharged into the atmosphere from that affected facility any gases that contain particulate matter in excess of 43 ng/J (0.10 lb/million Btu) heat input.

(c) On and after the date on which the initial performance test is completed or is required to be completed under § 60.8 of this part, whichever date comes first, no owner or operator of an affected facility that combusts wood, or wood with other fuels, except coal, shall cause to be discharged from that affected facility any gases that contain particulate matter in excess of the following emission limits:

(1) 43 ng/J (0.10 lb/million Btu) heat input if the affected facility has an annual capacity factor greater than 30 percent (0.30) for wood.

(2) 86 ng/J (0.20 lb/million Btu) heat input if

(i) The affected facility has an annual capacity factor of 30 percent (0.30) or less for wood,

(ii) Is subject to a federally enforceable requirement limiting operation of the affected facility to an annual capacity factor of 30 percent (0.30) or less for wood, and

(iii) Has a maximum heat input capacity of 73 MW (250 million Btu/hour) or less.

(d) On and after the date on which the initial performance test is completed or is required to be completed under § 60.8 of this part, whichever date comes first, no owner or operator of an affected facility that combusts municipal-type solid waste or mixtures of municipal-type solid waste with other fuels, shall cause to be discharged into the atmosphere from that affected facility any gases that contain particulate matter in excess of the following emission limits:

(1) 43 ng/J (0.10 lb/million Btu) heat input,

(i) If the affected facility combusts only municipal-type solid waste, or

(ii) If the affected facility combusts municipal-type solid waste and other fuels and has an annual capacity factor for the other fuels of 10 percent (0.10) or less.

(2) 86 ng/J (0.20 lb/million Btu) heat input if the affected facility combusts municipal-type solid waste or municipal-type solid waste and other fuels; and

(i) Has an annual capacity factor for municipal-type solid waste and other fuels of 30 percent (0.30) or less,

(ii) Has a maximum heat input capacity of 73 MW (250 million Btu/hour) or less,

(iii) Has a federally enforceable requirement limiting operation of the affected facility to an annual capacity factor of 30 percent (0.30) for municipal-type solid waste, or municipal-type solid waste and other fuels, and

(iv) Construction of the affected facility commenced after June 19, 1984, but before November 25, 1986.

(e) For the purposes of this section, the annual capacity factor is determined by dividing the actual heat input to the steam generating unit during the calendar year from the combustion of coal,

wood, or municipal-type solid waste, and other fuels, as applicable, by the potential heat input to the steam generating unit if the steam generating unit had been operated for 8,760 hours at the maximum design heat input capacity.

(f) On and after the date on which the initial performance test is completed or is required to be completed under 60.8 of this part, whichever date comes first, no owner or operator of an affected facility that combusts coal, oil, wood, or mixtures of these fuels with any other fuels shall cause to be discharged into the atmosphere any gases that exhibit greater than 20 percent opacity (6-minute average), except for one 6-minute period per hour of not more than 27 percent opacity.

(g) The particulate matter and opacity standards apply at all times, except during periods of startup, shutdown or malfunction.

[52 FR 47842, Dec. 16, 1987, as amended at 54 FR 51819, Dec. 18, 1989]

§ 60.44b Standard for nitrogen oxides.

(a) Except as provided under paragraph (k) of this section, on and after the date on which the initial performance test is completed or is required to be completed under § 60.8 of this part, whichever date comes first, no owner or operator of an affected facility that is subject to the provisions of this section and that combusts only coal, oil, or natural gas shall cause to be discharged into the atmosphere from that affected facility any gases that contain nitrogen oxides (expressed as NO_2) in excess of the following emission limits:

Fuel/Steam generating unit type	Nitrogen oxide emission limits ng/J (lb/million Btu) (expressed as NO_2) heat input
(1) Natural gas and distillate oil, except (4):	
(i) Low heat release rate	43 (0.10)
(ii) High heat release rate	86 (0.20)
(2) Residual oil:	
(i) Low heat release rate	130 (0.30)
(ii) High heat release rate	170 (0.40)
(3) Coal:	
(i) Mass-feed stoker	210 (0.50)
(ii) Spreader stoker and fluidized bed combustion	260 (0.60)
(iii) Pulverized coal	300 (0.70)
(iv) Lignite, except (v)	260 (0.60)
(v) Lignite mined in North Dakota, South Dakota, or Montana and combusted in a slag tap furnace	340 (0.80)
(vi) Coal-derived synthetic fuels	210 (0.50)
(4) Duct burner used in a combined cycle system:	
(i) Natural gas and distillate oil	86 (0.20)
(ii) Residual oil	170 (0.40)

(b) Except as provided under paragraph (k) of this section, on and after the date on which the initial performance test is completed or is required to be completed under § 60.8 of this part, whichever date comes first, no owner or operator of an affected facility that simultaneously combusts mixtures of coal, oil, or natural gas shall cause to be discharged into the atmosphere from that affected facility any gases that contain nitrogen oxides in excess of a limit determined by use of the following formula:

$$E_n=[(EL_{go}\ H_{go})+(EL_{ro}\ H_{ro})+(EL_c\ H_c)]/(H_{go}+H_{ro}+H_c)$$

where:

E_n is the nitrogen oxides emission limit (expressed as NO_2), ng/J (lb/million Btu)

EL_{go} is the appropriate emission limit from paragraph (a)(1) for combustion of natural gas or distillate oil, ng/J (lb/million Btu)

H_{go} is the heat input from combustion of natural gas or distillate oil,

EL_{ro} is the appropriate emission limit from paragraph (a)(2) for combustion of residual oil,

H_{ro} is the heat input from combustion of residual oil,

EL_c is the appropriate emission limit from paragraph (a)(3) for combustion of coal, and

H_c is the heat input from combustion of coal.

(c) On and after the date on which the initial performance test is completed or is required to be completed under § 60.8 of this part, whichever comes first, no owner or operator of an affected facility that simultaneously combusts coal or oil, or a mixture of these fuels with natural gas, and wood, municipal-type solid waste, or any other fuel shall cause to be discharged into the atmosphere any gases that contain nitrogen oxides in excess of the emission limit for the coal or oil, or mixture of these fuels with natural gas combusted in the affected facility, as determined pursuant to paragraph (a) or (b) of this section, unless the affected facility has an annual capacity factor for coal or oil, or mixture of these fuels with natural gas of 10 percent (0.10) or less and is subject to a federally enforceable requirement that limits operation of the facility to an annual capacity factor of 10 percent (0.10) or less for coal, oil, or a mixture of these fuels with natural gas.

(d) On and after the date on which the initial performance test is completed or is required to be completed under § 60.8 of this part, whichever date comes first, no owner or operator of an affected facility that simultaneously combusts natural gas with wood, municipal-type solid waste, or other solid fuel, except coal, shall cause to be discharged into the atmosphere from that affected facility any gases that contain nitrogen oxides in excess of 130 ng/J (0.30 lb/million Btu) heat input unless the affected facility has an annual capacity factor for natural gas of 10 percent (0.10) or less and is subject to a federally enforceable requirement that limits operation of the affected facility to an annual capacity factor of 10 percent (0.10) or less for natural gas.

(e) On and after the date on which the initial performance test is completed or is required to be completed under § 60.8 of this part, whichever date comes first, no owner or operator of an affected facility that simultaneously combusts coal, oil, or natural gas with byproduct/waste shall cause to be discharged into the atmosphere from that affected facility any gases that contain nitrogen oxides in excess of an emission limit determined by the following formula unless the affected facility has an annual capacity factor for coal, oil, and natural gas of 10 percent (0.10) or less and is subject to a federally enforceable requirement which limits operation of the affected facility to an annual capacity factor of 10 percent (0.10) or less:

$$E_n=[(EL_{go}\ H_{go})+(EL_{ro}\ H_{ro})+(EL_c\ H_c)]/(H_{go}+H_{ro}+H_c)$$

where:

E_n is the nitrogen oxides emission limit (expressed as NO_2), ng/J (lb/million Btu)

EL_{go} is the appropriate emission limit from paragraph (a)(1) for combustion of natural gas or distillate oil, ng/J (lb/million Btu).

H_{go} is the heat input from combustion of natural gas, distillate oil and gaseous byproduct/waste, ng/J (lb/million Btu).

EL_{ro} is the appropriate emission limit from paragraph (a)(2) for combustion of residual oil, ng/J (lb/million Btu)

H_{ro} is the heat input from combustion of residual oil and/or liquid byproduct/waste.

EL_c is the appropriate emission limit from paragraph (a)(3) for combustion of coal, and

H_c is the heat input from combustion of coal.

(f) Any owner or operator of an affected facility that combusts byproduct/waste with either natural gas or oil may petition the Administrator within 180 days of the initial startup of the affected facility to establish a nitrogen oxides emission limit which shall apply specifically to that affected facility when the byproduct/waste is combusted. The petition shall include sufficient and appropriate data, as determined by the Administrator, such as nitrogen oxides emissions from the affected facility, waste composition (including nitrogen content), and combustion conditions to allow the Administrator to confirm that the affected facility is unable to comply with the emission limits in paragraph (e) of this section and to determine the appropriate emission limit for the affected facility.

(1) Any owner or operator of an affected facility petitioning for a facility-specific nitrogen oxides emission limit under this section shall:

(i) Demonstrate compliance with the emission limits for natural gas and distillate oil in paragraph (a)(1) of this section or for residual oil in paragraph (a)(2) of this section, as appropriate, by conducting a 30-day performance test as provided in § 60.46b(e). During the performance test only natural gas, distillate oil, or residual oil shall be combusted in the affected facility; and

(ii) Demonstrate that the affected facility is unable to comply with the emission limits for natural gas and distillate oil in paragraph (a)(1) of this section or for residual oil in paragraph (a)(2) of this section, as appropriate, when gaseous or liquid byproduct/waste is combusted in the affected facility under the same conditions and using the same technological system of emission reduction applied when demonstrating compliance under paragraph (f)(1)(i) of this section.

(2) The nitrogen oxides emission limits for natural gas or distillate oil in paragraph (a)(1) of this section or for residual oil in paragraph (a)(2) of this section, as appropriate, shall be applicable to the affected facility until and unless the petition is approved by the Administrator. If the petition is approved by the Administrator, a facility-specific nitrogen oxides emission limit will be established at the nitrogen oxides emission level achievable when the affected facility is combusting oil or natural gas and byproduct/waste in a manner that the Administrator determines to be consistent with minimizing nitrogen oxides emissions.

(g) Any owner or operator of an affected facility that combusts hazardous waste (as defined by 40 CFR part 261 or 40 CFR part 761) with natural gas or oil may petition the Administrator within 180 days of the initial startup of the affected facility for a waiver from compliance with the nitrogen oxides emission limit which applies specifically to that affected facility. The petition must include sufficient and appropriate data, as determined by the Administrator, on nitrogen oxides emissions from the affected facility, waste destruction efficiencies, waste composition (including nitrogen content), the quantity of specific wastes to be combusted and combustion conditions to allow the Administrator to determine if the affected facility is able to comply with the nitrogen oxides emission limits required by this section. The owner or operator of the affected facility shall demonstrate that when hazardous waste is combusted in the affected facility, thermal destruction efficiency requirements for hazardous waste specified in an applicable federally enforceable requirement preclude compliance with the nitrogen oxides emission limits of this section. The nitrogen oxides emission limits for natural gas or distillate oil in paragraph (a)(1) of this section or for residual oil in paragraph (a)(2) of this section, as appropriate, are applicable to the affected facility until and unless the petition is approved by the Administrator. (See 40 CFR 761.70 for regulations applicable to the incineration of materials containing polychlorinated biphenyls (PCB's).)

(h) For purposes of paragraph (i) of this section, the nitrogen oxide standards under this section

apply at all times including periods of startup, shutdown, or malfunction.

(i) Except as provided under paragraph (j) of this section, compliance with the emission limits under this section is determined on a 30-day rolling average basis.

(j) Compliance with the emission limits under this section is determined on a 24-hour average basis for the initial performance test and on a 3-hour average basis for subsequent performance tests for any affected facilities that:

(1) Combust, alone or in combination, only natural gas, distillate oil, or residual oil with a nitrogen content of 0.30 weight percent or less;

(2) Have a combined annual capacity factor of 10 percent or less for natural gas, distillate oil, and residual oil with a nitrogen content of 0.30 weight percent or less; and

(3) Are subject to a Federally enforceable requirement limiting operation of the affected facility to the firing of natural gas, distillate oil, and/or residual oil with a nitrogen content of 0.30 weight percent or less and limiting operation of the affected facility to a combined annual capacity factor of 10 percent or less for natural gas, distillate oil, and residual oil and a nitrogen content of 0.30 weight percent or less.

(k) Affected facilities that meet the criteria described in paragraphs (j) (1), (2), and (3) of this section, and that have a heat input capacity of 73 MW (250 million Btu/hour) or less, are not subject to the nitrogen oxides emission limits under this section.

[52 FR 47842, Dec. 16, 1987, as amended at 54 FR 51825, Dec. 18, 1989]

§ 60.45b Compliance and performance test methods and procedures for sulfur dioxide.

(a) The sulfur dioxide emission standards under § 60.42b apply at all times.

(b) In conducting the performance tests required under § 60.8, the owner or operator shall use the methods and procedures in appendix A of this part or the methods and procedures as specified in this section, except as provided in § 60.8(b). Section 60.8(f) does not apply to this section. The 30-day notice required in § 60.8(d) applies only to the initial performance test unless otherwise specified by the Administrator.

(c) The owner or operator of an affected facility shall conduct performance tests to determine compliance with the percent of potential sulfur dioxide emission rate (% P_s) and the sulfur dioxide emission rate (E_s) pursuant to § 60.42b following the procedures listed below, except as provided under paragraph (d) of this section.

(1) The initial performance test shall be conducted over the first 30 consecutive operating days of the steam generating unit. Compliance with the sulfur dioxide standards shall be determined using a 30-day average. The first operating day included in the initial performance test shall be scheduled within 30 days after achieving the maximum production rate at which the affected facility will be operated, but not later than 180 days after initial startup of the facility.

(2) If only coal or only oil is combusted, the following procedures are used:

(i) The procedures in Method 19 are used to determine the hourly sulfur dioxide emission rate (E_{ho}) and the 30-day average emission rate (E_{ao}). The hourly averages used to compute the 30-day averages are obtained from the continuous emission monitoring system of § 60.47b (a) or (b).

(ii) The percent of potential sulfur dioxide emission rate (% P_s) emitted to the atmosphere is computed using the following formula:

$$\% P_s = 100 (1 - \% R_g/100)(1 - \% R_f/100)$$

where:

% R_g is the sulfur dioxide removal efficiency of the control device as determined by Method 19, in percent.

% R_f is the sulfur dioxide removal efficiency of fuel pretreatment as determined by Method 19, in percent.

(3) If coal or oil is combusted with other fuels, the same procedures required in paragraph (c)(2) of this section are used, except as provided in the following:

(i) An adjusted hourly sulfur dioxide emission rate ($E_{ho}°$) is used in Equation 19–19 of Method 19 to compute an adjusted 30-day average emission rate ($E_{ao}°$). The E_{ho} is computed using the following formula:

$$E_{ho}° = [E_{ho} - E_w(1 - X_k)]/X_k$$

where:

$E_{ho}°$ is the adjusted hourly sulfur dioxide emission rate, ng/J (lb/million Btu).

E_{ho} is the hourly sulfur dioxide emission rate, ng/J (lb/million Btu).

E_w is the sulfur dioxide concentration in fuels other than coal and oil combusted in the affected facility, as determined by the fuel sampling and analysis procedures in Method 19, ng/J (lb/million Btu). The value E_w for each fuel lot is used for each hourly average during the time that the lot is being combusted.

X_k is the fraction of total heat input from fuel combustion derived from coal, oil, or coal and oil, as determined by applicable procedures in Method 19.

(ii) To compute the percent of potential sulfur dioxide emission rate (% P_s), an adjusted % R_g (% $R_g°$) is computed from the adjusted $E_{ao}°$ from paragraph (b)(3)(i) of this section and an adjusted average sulfur dioxide inlet rate ($E_{ai}°$) using the following formula:

$$\% R_g° = 100 (1.0 - E_{ao}°/E_{ai}°)$$

To compute $E_{ai}°$, an adjusted hourly sulfur dioxide inlet rate ($E_{hi}°$) is used. The $E_{hi}°$ is computed using the following formula:

$E_{hi}°=[E_{hi} - E_w(1 - X_k)]/X_k$

where:

$E_{hi}°$ is the adjusted hourly sulfur dioxide inlet rate, ng/J (lb/million Btu).

E_{hi} is the hourly sulfur dioxide inlet rate, ng/J (lb/million Btu).

(4) The owner or operator of an affected facility subject to paragraph (b)(3) of this section does not have to measure parameters E_w or X_k if the owner or operator elects to assume that X_k=1.0. Owners or operators of affected facilities who assume X_k=1.0 shall

(i) Determine % P_s following the procedures in paragraph (c)(2) of this section, and

(ii) Sulfur dioxide emissions (E_s) are considered to be in compliance with sulfur dioxide emission limits under § 60.42b.

(5) The owner or operator of an affected facility that qualifies under the provisions of § 60.42b(d) does not have to measure parameters E_w or X_k under paragraph (b)(3) of this section if the owner or operator of the affected facility elects to measure sulfur dioxide emission rates of the coal or oil following the fuel sampling and analysis procedures under Method 19.

(d) Except as provided in paragraph (j), the owner or operator of an affected facility that combusts only very low sulfur oil, has an annual capacity factor for oil of 10 percent (0.10) or less, and is subject to a Federally enforceable requirement limiting operation of the affected facility to an annual capacity factor for oil of 10 percent (0.10) or less shall:

(1) Conduct the initial performance test over 24 consecutive steam generating unit operating hours at full load;

(2) Determine compliance with the standards after the initial performance test based on the arithmetic average of the hourly emissions data during each steam generating unit operating day if a continuous emission measurement system (CEMS) is used, or based on a daily average if Method 6B or fuel sampling and analysis procedures under Method 19 are used.

(e) The owner or operator of an affected facility subject to § 60.42b(d)(1) shall demonstrate the maximum design capacity of the steam generating unit by operating the facility at maximum capacity for 24 hours. This demonstration will be made during the initial performance test and a subsequent demonstration may be requested at any other time. If the 24-hour average firing rate for the affected facility is less than the maximum design capacity provided by the manufacturer of the affected facility, the 24-hour average firing rate shall be used to determine the capacity utilization rate for the affected facility, otherwise the maximum design capacity provided by the manufacturer is used.

(f) For the initial performance test required under § 60.8, compliance with the sulfur dioxide emission limits and percent reduction requirements under § 60.42b is based on the average emission rates and the average percent reduction for sulfur dioxide for the first 30 consecutive steam generating unit operating days, except as provided under paragraph (d) of this section. The initial performance test is the only test for which at least 30 days prior notice is required unless otherwise specified by the Administrator. The initial performance test is to be scheduled so that the first steam generating unit operating day of the 30 successive steam generating unit operating days is completed within 30 days after achieving the maximum production rate at which the affected facility will be operated, but not later than 180 days after initial startup of the facility. The boiler load during the 30-day period does not have to be the maximum design load, but must be representative of future operating conditions and include at least one 24-hour period at full load.

(g) After the initial performance test required under § 60.8, compliance with the sulfur dioxide emission limits and percent reduction requirements under § 60.42b is based on the average emission rates and the average percent reduction for sulfur dioxide for 30 successive steam generating unit operating days, except as provided under paragraph (d). A separate performance test is completed at the end of each steam generating unit operating day after the initial performance test, and a new 30-day average emission rate and percent reduction for sulfur dioxide are calculated to show compliance with the standard.

(h) Except as provided under paragraph (i) of this section, the owner or operator of an affected facility shall use all valid sulfur dioxide emissions data in calculating % P_s and E_{ho} under paragraph (c), of this section whether or not the minimum emissions data requirements under § 60.46b are achieved. All valid emissions data, including valid sulfur dioxides emission data collected during periods of startup, shutdown and malfunction, shall be used in calculating % P_s and E_{ho} pursuant to paragraph (c) of this section.

(i) During periods of malfunction or maintenance of the sulfur dioxide control systems when oil is combusted as provided under § 60.42b(i), emission data are not used to calculate % P_s or E_s under § 60.42b (a), (b) or (c), however, the emissions data are used to determine compliance with the emission limit under § 60.42b(i).

(j) The owner or operator of an affected facility that combusts very low sulfur oil is not subject to the compliance and performance testing require-

ments of this section if the owner or operator obtains fuel receipts as described in § 60.49b(r).

[52 FR 47842, Dec. 16, 1987, as amended at 54 FR 51820, 51825, Dec. 18, 1989]

§ 60.46b Compliance and performance test methods and procedures for particulate matter and nitrogen oxides.

(a) The particulate matter emission standards and opacity limits under § 60.43b apply at all times except during periods of startup, shutdown, or malfunction. The nitrogen oxides emission standards under § 60.44b apply at all times.

(b) Compliance with the particulate matter emission standards under § 60.43b shall be determined through performance testing as described in paragraph (d) of this section.

(c) Compliance with the nitrogen oxides emission standards under § 60.44b shall be determined through performance testing under paragraph (e) or (f), or under paragraphs (g) and (h) of this section, as applicable.

(d) To determine compliance with the particulate matter emission limits and opacity limits under § 60.43b, the owner or operator of an affected facility shall conduct an initial performance test as required under § 60.8 using the following procedures and reference methods:

(1) Method 3B is used for gas analysis when applying Method 5 or Method 17.

(2) Method 5, Method 5B, or Method 17 shall be used to measure the concentration of particulate matter as follows:

(i) Method 5 shall be used at affected facilities without wet flue gas desulfurization (FGD) systems; and

(ii) Method 17 may be used at facilities with or without wet scrubber systems provided the stack gas temperature does not exceed a temperature of 160 °C (320 °F). The procedures of sections 2.1 and 2.3 of Method 5B may be used in Method 17 only if it is used after a wet FGD system. Do not use Method 17 after wet FGD systems if the effluent is saturated or laden with water droplets.

(iii) Method 5B is to be used only after wet FGD systems.

(3) Method 1 is used to select the sampling site and the number of traverse sampling points. The sampling time for each run is at least 120 minutes and the minimum sampling volume is 1.7 dscm (60 dscf) except that smaller sampling times or volumes may be approved by the Administrator when necessitated by process variables or other factors.

(4) For Method 5, the temperature of the sample gas in the probe and filter holder is monitored and is maintained at 160 °C (320 °F).

(5) For determination of particulate matter emissions, the oxygen or carbon dioxide sample is obtained simultaneously with each run of Method 5, Method 5B or Method 17 by traversing the duct at the same sampling location.

(6) For each run using Method 5, Method 5B or Method 17, the emission rate expressed in nanograms per joule heat input is determined using:

(i) The oxygen or carbon dioxide measurements and particulate matter measurements obtained under this section,

(ii) The dry basis F factor, and

(iii) The dry basis emission rate calculation procedure contained in Method 19 (appendix A).

(7) Method 9 is used for determining the opacity of stack emissions.

(e) To determine compliance with the emission limits for nitrogen oxides required under § 60.44b, the owner or operator of an affected facility shall conduct the performance test as required under § 60.8 using the continuous system for monitoring nitrogen oxides under § 60.48(b).

(1) For the initial compliance test, nitrogen oxides from the steam generating unit are monitored for 30 successive steam generating unit operating days and the 30-day average emission rate is used to determine compliance with the nitrogen oxides emission standards under § 60.44b. The 30-day average emission rate is calculated as the average of all hourly emissions data recorded by the monitoring system during the 30-day test period.

(2) Following the date on which the initial performance test is completed or is required to be completed under § 60.8 of this part, whichever date comes first, the owner or operator of an affected facility which combusts coal or which combusts residual oil having a nitrogen content greater than 0.30 weight percent shall determine compliance with the nitrogen oxides emission standards under § 60.44b on a continuous basis through the use of a 30-day rolling average emission rate. A new 30-day rolling average emission rate is calculated each steam generating unit operating day as the average of all of the hourly nitrogen oxides emission data for the preceding 30 steam generating unit operating days.

(3) Following the date on which the initial performance test is completed or is required to be completed under § 60.8 of this part, whichever date comes first, the owner or operator of an affected facility which has a heat input capacity greater than 73 MW (250 million Btu/hour) and which combusts natural gas, distillate oil, or residual oil having a nitrogen content of 0.30 weight percent or less shall determine compliance with the nitrogen oxides standards under § 60.44b on a continuous basis through the use of a 30-day rolling average emission rate. A new 30-day rolling

average emission rate is calculated each steam generating unit operating day as the average of all of the hourly nitrogen oxides emission data for the preceding 30 steam generating unit operating days.

(4) Following the date on which the initial performance test is completed or required to be completed under § 60.8 of this part, whichever date comes first, the owner or operator of an affected facility which has a heat input capacity of 73 MW (250 million Btu/hour) or less and which combusts natural gas, distillate oil, or residual oil having a nitrogen content of 0.30 weight percent or less shall upon request determine compliance with the nitrogen oxides standards under § 60.44b through the use of a 30-day performance test. During periods when performance tests are not requested, nitrogen oxides emissions data collected pursuant to § 60.48b(g)(1) or § 60.48b(g)(2) are used to calculate a 30-day rolling average emission rate on a daily basis and used to prepare excess emission reports, but will not be used to determine compliance with the nitrogen oxides emission standards. A new 30-day rolling average emission rate is calculated each steam generating unit operating day as the average of all of the hourly nitrogen oxides emission data for the preceding 30 steam generating unit operating days.

(5) If the owner or operator of an affected facility which combusts residual oil does not sample and analyze the residual oil for nitrogen content, as specified in § 60.49b(e), the requirements of paragraph (iii) of this section apply and the provisions of paragraph (iv) of this section are inapplicable.

(f) To determine compliance with the emission limit for nitrogen oxides required by § 60.44b(a)(4) for duct burners used in combined cycle systems, the owner or operator of an affected facility shall conduct the performance test required under § 60.8 using the nitrogen oxides and oxygen measurement procedures in 40 CFR part 60 appendix A, Method 20. During the performance test, one sampling site shall be located as close as practicable to the exhaust of the turbine, as provided by section 6.1.1 of Method 20. A second sampling site shall be located at the outlet to the steam generating unit. Measurements of nitrogen oxides and oxygen shall be taken at both sampling sites during the performance test. The nitrogen oxides emission rate from the combined cycle system shall be calculated by subtracting the nitrogen oxides emission rate measured at the sampling site at the outlet from the turbine from the nitrogen oxides emission rate measured at the sampling site at the outlet from the steam generating unit.

(g) The owner or operator of an affected facility described in § 60.44b(j) or § 60.44b(k) shall demonstrate the maximum heat input capacity of the steam generating unit by operating the facility at maximum capacity for 24 hours. The owner or operator of an affected facility shall determine the maximum heat input capacity using the heat loss method described in sections 5 and 7.3 of the ASME *Power Test Codes* 4.1 (see IBR § 60.17(h)). This demonstration of maximum heat input capacity shall be made during the initial performance test for affected facilities that meet the criteria of § 60.44b(j). It shall be made within 60 days after achieving the maximum production rate at which the affected facility will be operated, but not later than 180 days after initial start-up of each facility, for affected facilities meeting the criteria of § 60.44b(k). Subsequent demonstrations may be required by the Administrator at any other time. If this demonstration indicates that the maximum heat input capacity of the affected facility is less than that stated by the manufacturer of the affected facility, the maximum heat input capacity determined during this demonstration shall be used to determine the capacity utilization rate for the affected facility. Otherwise, the maximum heat input capacity provided by the manufacturer is used.

(h) The owner or operator of an affected facility described in § 60.44b(j) that has a heat input capacity greater than 73 MW (250 million Btu/hour) shall:

(1) Conduct an initial performance test as required under § 60.8 over a minimum of 24 consecutive steam generating unit operating hours at maximum heat input capacity to demonstrate compliance with the nitrogen oxides emission standards under § 60.44b using Method 7, 7A, 7E, or other approved reference methods; and

(2) Conduct subsequent performance tests once per calendar year or every 400 hours of operation (whichever comes first) to demonstrate compliance with the nitrogen oxides emission standards under § 60.44b over a minimum of 3 consecutive steam generating unit operating hours at maximum heat input capacity using Method 7, 7A, 7E, or other approved reference methods.

[52 FR 47842, Dec. 16, 1987, as amended at 54 FR 51820, 51825, Dec. 18, 1989; 55 FR 18876, May 7, 1990]

§ 60.47b Emission monitoring for sulfur dioxide.

(a) Except as provided in paragraphs (b) and (f) of this section, the owner or operator of an affected facility subject to the sulfur dioxide standards under § 60.42b shall install, calibrate, maintain, and operate continuous emission monitoring systems (CEMS) for measuring sulfur dioxide concentrations and either oxygen (O_2) or carbon dioxide (CO_2) concentrations and shall record the output of the systems. The sulfur dioxide and either oxygen or carbon dioxide concentrations shall both

be monitored at the inlet and outlet of the sulfur dioxide control device.

(b) As an alternative to operating CEMS as required under paragraph (a) of this section, an owner or operator may elect to determine the average sulfur dioxide emissions and percent reduction by:

(1) Collecting coal or oil samples in an as-fired condition at the inlet to the steam generating unit and analyzing them for sulfur and heat content according to Method 19. Method 19 provides procedures for converting these measurements into the format to be used in calculating the average sulfur dioxide input rate, or

(2) Measuring sulfur dioxide according to Method 6B at the inlet or outlet to the sulfur dioxide control system. An initial stratification test is required to verify the adequacy of the Method 6B sampling location. The stratification test shall consist of three paired runs of a suitable sulfur dioxide and carbon dioxide measurement train operated at the candidate location and a second similar train operated according to the procedures in section 3.2 and the applicable procedures in section 7 of Performance Specification 2. Method 6B, Method 6A, or a combination of Methods 6 and 3 or 3B or Methods 6C and 3A are suitable measurement techniques. If Method 6B is used for the second train, sampling time and timer operation may be adjusted for the stratification test as long as an adequate sample volume is collected; however, both sampling trains are to be operated similarly. For the location to be adequate for Method 6B 24-hour tests, the mean of the absolute difference between the three paired runs must be less than 10 percent.

(3) A daily sulfur dioxide emission rate, E_D, shall be determined using the procedure described in Method 6A, section 7.6.2 (Equation 6A–8) and stated in ng/J (lb/million Btu) heat input.

(4) The mean 30-day emission rate is calculated using the daily measured values in ng/J (lb/million Btu) for 30 successive steam generating unit operating days using equation 19–20 of Method 19.

(c) The owner or operator of an affected facility shall obtain emission data for at least 75 percent of the operating hours in at least 22 out of 30 successive boiler operating days. If this minimum data requirement is not met with a single monitoring system, the owner or operator of the affected facility shall supplement the emission data with data collected with other monitoring systems as approved by the Administrator or the reference methods and procedures as described in paragraph (b) of this section.

(d) The 1-hour average sulfur dioxide emission rates measured by the CEMS required by paragraph (a) of this section and required under § 60.13(h) is expressed in ng/J or lb/million Btu heat input and is used to calculate the average emission rates under § 60.42b. Each 1-hour average sulfur dioxide emission rate must be based on more than 30 minutes of steam generating unit operation and include at least 2 data points with each representing a 15-minute period. Hourly sulfur dioxide emission rates are not calculated if the affected facility is operated less than 30 minutes in a 1-hour period and are not counted toward determination of a steam generating unit operating day.

(e) The procedures under § 60.13 shall be followed for installation, evaluation, and operation of the CEMS.

(1) All CEMS shall be operated in accordance with the applicable procedures under Performance Specifications 1, 2, and 3 (appendix B).

(2) Quarterly accuracy determinations and daily calibration drift tests shall be performed in accordance with Procedure 1 (appendix F).

(3) For affected facilities combusting coal or oil, alone or in combination with other fuels, the span value of the sulfur dioxide CEMS at the inlet to the sulfur dioxide control device is 125 percent of the maximum estimated hourly potential sulfur dioxide emissions of the fuel combusted, and the span value of the CEMS at the outlet to the sulfur dioxide control device is 50 percent of the maximum estimated hourly potential sulfur dioxide emissions of the fuel combusted.

(f) The owner or operator of an affected facility that combusts very low sulfur oil is not subject to the emission monitoring requirements of this section if the owner or operator obtains fuel receipts as described in § 60.49b(r).

[52 FR 47842, Dec. 16, 1987, as amended at 54 FR 51820, Dec. 18, 1989; 55 FR 5212, Feb. 14, 1990; 55 FR 18876, May 7, 1990]

§ 60.48b Emission monitoring for particulate matter and nitrogen oxides.

(a) The owner or operator of an affected facility subject to the opacity standard under § 60.43b shall install, calibrate, maintain, and operate a continuous monitoring system for measuring the opacity of emissions discharged to the atmosphere and record the output of the system.

(b) Except as provided under paragraphs (g), (h), and (i) of this section, the owner or operator of an affected facility subject to the nitrogen oxides standards under § 60.44b shall install, calibrate, maintain, and operate a continuous monitoring system for measuring nitrogen oxides emissions discharged to the atmosphere and record the output of the system.

(c) The continuous monitoring systems required under paragraph (b) of this section shall be operated and data recorded during all periods of operation of the affected facility except for continuous monitoring system breakdowns and repairs. Data is

recorded during calibration checks, and zero and span adjustments.

(d) The 1-hour average nitrogen oxides emission rates measured by the continuous nitrogen oxides monitor required by paragraph (b) of this section and required under § 60.13(h) shall be expressed in ng/J or lb/million Btu heat input and shall be used to calculate the average emission rates under § 60.44b. The 1-hour averages shall be calculated using the data points required under § 60.13(b). At least 2 data points must be used to calculate each 1-hour average.

(e) The procedures under § 60.13 shall be followed for installation, evaluation, and operation of the continuous monitoring systems.

(1) For affected facilities combusting coal, wood or municipal-type solid waste, the span value for a continuous monitoring system for measuring opacity shall be between 60 and 80 percent.

(2) For affected facilities combusting coal, oil, or natural gas, the span value for nitrogen oxides is determined as follows:

Fuel	Span values for nitrogen oxides (PPM)
Natural gas	500
Oil	500
Coal	1,000
Mixtures	500(x+y)+1,000z

where:

x is the fraction of total heat input derived from natural gas,

y is the fraction of total heat input derived from oil, and

z is the fraction of total heat input derived from coal.

(3) All span values computed under paragraph (e)(2) of this section for combusting mixtures of regulated fuels are rounded to the nearest 500 ppm.

(f) When nitrogen oxides emission data are not obtained because of continuous monitoring system breakdowns, repairs, calibration checks and zero and span adjustments, emission data will be obtained by using standby monitoring systems, Method 7, Method 7A, or other approved reference methods to provide emission data for a minimum of 75 percent of the operating hours in each steam generating unit operating day, in at least 22 out of 30 successive steam generating unit operating days.

(g) The owner or operator of an affected facility that has a heat input capacity of 73 MW (250 million Btu/hour) or less, and which has an annual capacity factor for residual oil having a nitrogen content of 0.30 weight percent or less, natural gas, distillate oil, or any mixture of these fuels, greater than 10 percent (0.10) shall:

(1) Comply with the provisions of paragraphs (b), (c), (d), (e)(2), (e)(3), and (f) of this section, or

(2) Monitor steam generating unit operating conditions and predict nitrogen oxides emission rates as specified in a plan submitted pursuant to § 60.49b(c).

(h) The owner or operator of an affected facility which is subject to the nitrogen oxides standards of § 60.44b(a)(4) is not required to install or operate a continuous monitoring system to measure nitrogen oxides emissions.

(i) The owner or operator of an affected facility described in § 60.44b(j) or § 60.44b(k) is not required to install or operate a continuous monitoring system for measuring nitrogen oxides emissions.

[52 FR 47842, Dec. 16, 1987, as amended at 54 FR 51825, Dec. 18, 1989]

§ 60.49b Reporting and recordkeeping requirements.

(a) The owner or operator of each affected facility shall submit notification of the date of initial startup, as provided by § 60.7. This notification shall include:

(1) The design heat input capacity of the affected facility and identification of the fuels to be combusted in the affected facility,

(2) If applicable, a copy of any Federally enforceable requirement that limits the annual capacity factor for any fuel or mixture of fuels under §§ 60.42b(d)(1), 60.43b(a)(2), (a)(3)(iii), (c)(2)(ii), (d)(2)(iii), 60.44b(c), (d), (e), (i), (j), (k), 60.45b(d), (g), 60.46b(h), or 60.48b(i),

(3) The annual capacity factor at which the owner or operator anticipates operating the facility based on all fuels fired and based on each individual fuel fired, and,

(4) Notification that an emerging technology will be used for controlling emissions of sulfur dioxide. The Administrator will examine the description of the emerging technology and will determine whether the technology qualifies as an emerging technology. In making this determination, the Administrator may require the owner or operator of the affected facility to submit additional information concerning the control device. The affected facility is subject to the provisions of § 60.42b(a) unless and until this determination is made by the Administrator.

(b) The owner or operator of each affected facility subject to the sulfur dioxide, particulate matter, and/or nitrogen oxides emission limits under §§ 60.42b, 60.43b, and 60.44b shall submit to the Administrator the performance test data from the initial performance test and the performance evaluation of the CEMS using the applicable performance specifications in appendix B. The owner or operator of each affected facility described in § 60.44b(j) or § 60.44b(k) shall submit to the Administrator the maximum heat input capacity data

from the demonstration of the maximum heat input capacity of the affected facility.

(c) The owner or operator of each affected facility subject to the nitrogen oxides standard of § 60.44b who seeks to demonstrate compliance with those standards through the monitoring of steam generating unit operating conditions under the provisions of § 60.48b(g)(2) shall submit to the Administrator for approval a plan that identifies the operating conditions to be monitored under § 60.48b(g)(2) and the records to be maintained under § 60.49b(j). This plan shall be submitted to the Administrator for approval within 360 days of the initial startup of the affected facility. The plan shall:

(1) Identify the specific operating conditions to be monitored and the relationship between these operating conditions and nitrogen oxides emission rates (i.e., ng/J or lbs/million Btu heat input). Steam generating unit operating conditions include, but are not limited to, the degree of staged combustion (i.e., the ratio of primary air to secondary and/or tertiary air) and the level of excess air (i.e., flue gas oxygen level);

(2) Include the data and information that the owner or operator used to identify the relationship between nitrogen oxides emission rates and these operating conditions;

(3) Identify how these operating conditions, including steam generating unit load, will be monitored under § 60.48b(g) on an hourly basis by the owner or operator during the period of operation of the affected facility; the quality assurance procedures or practices that will be employed to ensure that the data generated by monitoring these operating conditions will be representative and accurate; and the type and format of the records of these operating conditions, including steam generating unit load, that will be maintained by the owner or operator under § 60.49b(j).

If the plan is approved, the owner or operator shall maintain records of predicted nitrogen oxide emission rates and the monitored operating conditions, including steam generating unit load, identified in the plan.

(d) The owner or operator of an affected facility shall record and maintain records of the amounts of each fuel combusted during each day and calculate the annual capacity factor individually for coal, distillate oil, residual oil, natural gas, wood, and municipal-type solid waste for each calendar quarter. The annual capacity factor is determined on a 12-month rolling average basis with a new annual capacity factor calculated at the end of each calendar month.

(e) For an affected facility that combusts residual oil and meets the criteria under §§ 60.46b(e)(4), 60.44b(j), or (k), the owner or operator shall maintain records of the nitrogen content of the residual oil combusted in the affected facility and calculate the average fuel nitrogen content on a per calendar quarter basis. The nitrogen content shall be determined using ASTM Method D3431–80, Test Method for Trace Nitrogen in Liquid Petroleum Hydrocarbons (IBR-see § 60.17), or fuel suppliers. If residual oil blends are being combusted, fuel nitrogen specifications may be prorated based on the ratio of residual oils of different nitrogen content in the fuel blend.

(f) For facilities subject to the opacity standard under § 60.43b, the owner or operator shall maintain records of opacity.

(g) Except as provided under paragraph (p) of this section, the owner or operator of an affected facility subject to the nitrogen oxides standards under § 60.44b shall maintain records of the following information for each steam generating unit operating day:

(1) Calendar date.

(2) The average hourly nitrogen oxides emission rates (expressed as NO_2) (ng/J or lb/million Btu heat input) measured or predicted.

(3) The 30-day average nitrogen oxides emission rates (ng/J or lb/million Btu heat input) calculated at the end of each steam generating unit operating day from the measured or predicted hourly nitrogen oxide emission rates for the preceding 30 steam generating unit operating days.

(4) Identification of the steam generating unit operating days when the calculated 30-day average nitrogen oxides emission rates are in excess of the nitrogen oxides emissions standards under § 60.44b, with the reasons for such excess emissions as well as a description of corrective actions taken.

(5) Identification of the steam generating unit operating days for which pollutant data have not been obtained, including reasons for not obtaining sufficient data and a description of corrective actions taken.

(6) Identification of the times when emission data have been excluded from the calculation of average emission rates and the reasons for excluding data.

(7) Identification of "F" factor used for calculations, method of determination, and type of fuel combusted.

(8) Identification of the times when the pollutant concentration exceeded full span of the continuous monitoring system.

(9) Description of any modifications to the continuous monitoring system that could affect the ability of the continuous monitoring system to comply with Performance Specification 2 or 3.

(10) Results of daily CEMS drift tests and quarterly accuracy assessments as required under appendix F, Procedure 1.

(h) The owner or operator of any affected facility in any category listed in paragraphs (h)(1) or (2) of this section is required to submit excess emission reports for any calendar quarter during which there are excess emissions from the affected facility. If there are no excess emissions during the calendar quarter, the owner or operator shall submit a report semiannually stating that no excess emissions occurred during the semiannual reporting period.

(1) Any affected facility subject to the opacity standards under § 60.43b(e) or to the operating parameter monitoring requirements under § 60.13(i)(1).

(2) Any affected facility that is subject to the nitrogen oxides standard of § 60.44b, and that

(i) Combusts natural gas, distillate oil, or residual oil with a nitrogen content of 0.3 weight percent or less, or

(ii) Has a heat input capacity of 73 MW (250 million Btu/hour) or less and is required to monitor nitrogen oxides emissions on a continuous basis under § 60.48b(g)(1) or steam generating unit operating conditions under § 60.48b(g)(2).

(3) For the purpose of § 60.43b, excess emissions are defined as all 6-minute periods during which the average opacity exceeds the opacity standards under § 60.43b(f).

(4) For purposes of § 60.48b(g)(1), excess emissions are defined as any calculated 30-day rolling average nitrogen oxides emission rate, as determined under § 60.46b(e), which exceeds the applicable emission limits in § 60.44b.

(i) The owner or operator of any affected facility subject to the continuous monitoring requirements for nitrogen oxides under § 60.48(b) shall submit a quarterly report containing the information recorded under paragraph (g) of this section. All quarterly reports shall be postmarked by the 30th day following the end of each calendar quarter.

(j) The owner or operator of any affected facility subject to the sulfur dioxide standards under § 60.42b shall submit written reports to the Administrator for every calendar quarter. All quarterly reports shall be postmarked by the 30th day following the end of each calendar quarter.

(k) For each affected facility subject to the compliance and performance testing requirements of § 60.45b and the reporting requirement in paragraph (j) of this section, the following information shall be reported to the Administrator:

(1) Calendar dates covered in the reporting period.

(2) Each 30-day average sulfur dioxide emission rate (ng/J or lb/million Btu heat input) measured during the reporting period, ending with the last 30-day period in the quarter; reasons for noncompliance with the emission standards; and a description of corrective actions taken.

(3) Each 30-day average percent reduction in sulfur dioxide emissions calculated during the reporting period, ending with the last 30-day period in the quarter; reasons for noncompliance with the emission standards; and a description of corrective actions taken.

(4) Identification of the steam generating unit operating days that coal or oil was combusted and for which sulfur dioxide or diluent (oxygen or carbon dioxide) data have not been obtained by an approved method for at least 75 percent of the operating hours in the steam generating unit operating day; justification for not obtaining sufficient data; and description of corrective action taken.

(5) Identification of the times when emissions data have been excluded from the calculation of average emission rates; justification for excluding data; and description of corrective action taken if data have been excluded for periods other than those during which coal or oil were not combusted in the steam generating unit.

(6) Identification of "F" factor used for calculations, method of determination, and type of fuel combusted.

(7) Identification of times when hourly averages have been obtained based on manual sampling methods.

(8) Identification of the times when the pollutant concentration exceeded full span of the CEMS.

(9) Description of any modifications to the CEMS that could affect the ability of the CEMS to comply with Performance Specification 2 or 3.

(10) Results of daily CEMS drift tests and quarterly accuracy assessments as required under appendix F, Procedure 1.

(11) The annual capacity factor of each fired as provided under paragraph (d) of this section.

(l) For each affected facility subject to the compliance and performance testing requirements of § 60.45b(d) and the reporting requirements of paragraph (j) of this section, the following information shall be reported to the Administrator:

(1) Calendar dates when the facility was in operation during the reporting period;

(2) The 24-hour average sulfur dioxide emission rate measured for each steam generating unit operating day during the reporting period that coal or oil was combusted, ending in the last 24-hour period in the quarter; reasons for noncompliance with the emission standards; and a description of corrective actions taken;

(3) Identification of the steam generating unit operating days that coal or oil was combusted for which sulfur dioxide or diluent (oxygen or carbon dioxide) data have not been obtained by an approved method for at least 75 percent of the operating hours; justification for not obtaining suffi-

cient data; and description of corrective action taken.

(4) Identification of the times when emissions data have been excluded from the calculation of average emission rates; justification for excluding data; and description of corrective action taken if data have been excluded for periods other than those during which coal or oil were not combusted in the steam generating unit.

(5) Identification of "F" factor used for calculations, method of determination, and type of fuel combusted.

(6) Identification of times when hourly averages have been obtained based on manual sampling methods.

(7) Identification of the times when the pollutant concentration exceeded full span of the CEMS.

(8) Description of any modifications to the CEMS which could affect the ability of the CEMS to comply with Performance Specification 2 or 3.

(9) Results of daily CEMS drift tests and quarterly accuracy assessments as required under appendix F, Procedure 1.

(m) For each affected facility subject to the sulfur dioxide standards under § 60.42b for which the minimum amount of data required under § 60.47b(f) were not obtained during a calendar quarter, the following information is reported to the Administrator in addition to that required under paragraph (k) of this section:

(1) The number of hourly averages available for outlet emission rates and inlet emission rates.

(2) The standard deviation of hourly averages for outlet emission rates and inlet emission rates, as determined in Method 19, section 7.

(3) The lower confidence limit for the mean outlet emission rate and the upper confidence limit for the mean inlet emission rate, as calculated in Method 19, section 7.

(4) The ratio of the lower confidence limit for the mean outlet emission rate and the allowable emission rate, as determined in Method 19, section 7.

(n) If a percent removal efficiency by fuel pretreatment (i.e., % R_f) is used to determine the overall percent reduction (i.e., % R_o) under § 60.45b, the owner or operator of the affected facility shall submit a signed statement with the quarterly report:

(1) Indicating what removal efficiency by fuel pretreatment (i.e., % R_f) was credited for the calendar quarter;

(2) Listing the quantity, heat content, and date each pretreated fuel shipment was received during the previous calendar quarter; the name and location of the fuel pretreatment facility; and the total quantity and total heat content of all fuels received at the affected facility during the previous calendar quarter;

(3) Documenting the transport of the fuel from the fuel pretreatment facility to the steam generating unit.

(4) Including a signed statement from the owner or operator of the fuel pretreatment facility certifying that the percent removal efficiency achieved by fuel pretreatment was determined in accordance with the provisions of Method 19 (appendix A) and listing the heat content and sulfur content of each fuel before and after fuel pretreatment.

(o) All records required under this section shall be maintained by the owner or operator of the affected facility for a period of 2 years following the date of such record.

(p) The owner or operator of an affected facility described in § 60.44b(j) or (k) shall maintain records of the following information for each steam generating unit operating day:

(1) Calendar date,

(2) The number of hours of operation, and

(3) A record of the hourly steam load.

(q) The owner or operator of an affected facility described in § 60.44b(j) or § 60.44b(k) shall submit to the Administrator on a quarterly basis:

(1) The annual capacity factor over the previous 12 months;

(2) The average fuel nitrogen content during the quarter, if residual oil was fired; and

(3) If the affected facility meets the criteria described in § 60.44b(j), the results of any nitrogen oxides emission tests required during the quarter, the hours of operation during the quarter, and the hours of operation since the last nitrogen oxides emission test.

(r) The owner or operator of an affected facility who elects to demonstrate that the affected facility combusts only very low sulfur oil under § 60.42b(j)(2) shall obtain and maintain at the affected facility fuel receipts from the fuel supplier which certify that the oil meets the definition of distillate oil as defined in § 60.41b. For the purposes of this section, the oil need not meet the fuel nitrogen content specification in the definition of distillate oil. Quarterly reports shall be submitted to the Administrator certifying that only very low sulfur oil meeting this definition was combusted in the affected facility during the preceding quarter.

(s) [Reserved]

(t) Facility-specific nitrogen oxides standard for Rohm and Haas Kentucky Incorporated's Boiler No. 100 located in Louisville, Kentucky:

(1) *Definitions.*

Air ratio control damper is defined as the part of the low nitrogen oxides burner that is adjusted to control the split of total combustion air delivered to the reducing and oxidation portions of the combustion flame.

Flue gas recirculation line is defined as the part of Boiler No. 100 that recirculates a portion of the boiler flue gas back into the combustion air.

(2) *Standard for nitrogen oxides.* (i) When fossil fuel alone is combusted, the nitrogen oxides emission limit for fossil fuel in § 60.44b(a) applies.

(ii) When fossil fuel and chemical by-product waste are simultaneously combusted, the nitrogen oxides emission limit is 473 ng/J (1.1 lb/million Btu), and the air ratio control damper tee handle shall be at a minimum of 5 inches (12.7 centimeters) out of the boiler, and the flue gas recirculation line shall be operated at a minimum of 10 percent open as indicated by its valve opening position indicator.

(3) *Emission monitoring for nitrogen oxides.* (i) The air ratio control damper tee handle setting and the flue gas recirculation line valve opening position indicator setting shall be recorded during each 8-hour operating shift.

(ii) The nitrogen oxides emission limit shall be determined by the compliance and performance test methods and procedures for nitrogen oxides in § 60.46b.

(iii) The monitoring of the nitrogen oxides emission limit shall be performed in accordance with § 60.48b.

(4) *Reporting and recordkeeping requirements.* (i) The owner or operator of Boiler No. 100 shall submit a report on any excursions from the limits required by paragraph (b)(2) of this section to the Administrator with the quarterly report required by § 60.49b(i).

(ii) The owner or operator of Boiler No. 100 shall keep records of the monitoring required by paragraph (b)(3) of this section for a period of 2 years following the date of such record.

(iii) The owner of operator of Boiler No. 100 shall perform all the applicable reporting and recordkeeping requirements of § 60.49b.

[52 FR 47842, Dec. 16, 1987, as amended at 54 FR 51820, 51825, Dec. 18, 1989; 60 FR 28062, May 30, 1995]

APPENDIX D

Boilers

Code of Federal Regulations
Title 40 - Protection of the Environment
Part 60 - New Source Performance Standards (NSPS)

Subpart Dc

Standards of Performance for Small Industrial - Commercial - Institutional Steam Generating Units

1997

Subpart Dc—Standards of Performance for Small Industrial-Commercial-Institutional Steam Generating Units

SOURCE: 55 FR 37683, Sept. 12, 1990, unless otherwise noted.

§ 60.40c Applicability and delegation of authority.

(a) Except as provided in paragraph (d) of this section, the affected facility to which this subpart applies is each steam generating unit for which construction, modification, or reconstruction is commenced after June 9, 1989 and that has a maximum design heat input capacity of 29 megawatts (MW) (100 million Btu per hour (Btu/hr)) or less, but greater than or equal to 2.9 MW (10 million Btu/hr).

(b) In delegating implementation and enforcement authority to a State under section 111(c) of the Clean Air Act, § 60.48c(a)(4) shall be retained by the Administrator and not transferred to a State.

(c) Steam generating units which meet the applicability requirements in paragraph (a) of this section are not subject to the sulfur dioxide (SO_2) or particulate matter (PM) emission limits, performance testing requirements, or monitoring requirements under this subpart (§§ 60.42c, 60.43c, 60.44c, 60.45c, 60.46c, or 60.47c) during periods of combustion research, as defined in § 60.41c.

(d) Any temporary change to an existing steam generating unit for the purpose of conducting combustion research is not considered a modification under § 60.14.

[55 FR 37683, Sept. 12, 1990, as amended at 61 FR 20736, May 8, 1996]

§ 60.41c Definitions.

As used in this subpart, all terms not defined herein shall have the meaning given them in the Clean Air Act and in subpart A of this part.

Annual capacity factor means the ratio between the actual heat input to a steam generating unit from an individual fuel or combination of fuels during a period of 12 consecutive calendar months and the potential heat input to the steam generating unit from all fuels had the steam generating unit been operated for 8,760 hours during that 12-month period at the maximum design heat input capacity. In the case of steam generating units that are rented or leased, the actual heat input shall be determined based on the combined heat input from all operations of the affected facility during a period of 12 consecutive calendar months.

Coal means all solid fuels classified as anthracite, bituminous, subbituminous, or lignite by the American Society for Testing and Materials in ASTM D388–77, "Standard Specification for Classification of Coals by Rank" (incorporated by reference—see § 60.17); coal refuse; and petroleum coke. Synthetic fuels derived from coal for the purpose of creating useful heat, including but not limited to solvent-refined coal, gasified coal, coal-oil mixtures, and coal-water mixtures, are included in this definition for the purposes of this subpart.

Coal refuse means any by-product of coal mining or coal cleaning operations with an ash content greater than 50 percent (by weight) and a heating value less than 13,900 kilojoules per kilogram (kJ/kg) (6,000 Btu per pound (Btu/lb) on a dry basis.

Cogeneration steam generating unit means a steam generating unit that simultaneously produces both electrical (or mechanical) and thermal energy from the same primary energy source.

Combined cycle system means a system in which a separate source (such as a stationary gas turbine, internal combustion engine, or kiln) provides exhaust gas to a steam generating unit.

Combustion research means the experimental firing of any fuel or combination of fuels in a steam generating unit for the purpose of conducting research and development of more efficient combustion or more effective prevention or control of air pollutant emissions from combustion, provided that, during these periods of research and development, the heat generated is not used for any purpose other than preheating combustion air for use by that steam generating unit (i.e., the heat generated is released to the atmosphere without being used for space heating, process heating, driving pumps, preheating combustion air for other units, generating electricity, or any other purpose).

Conventional technology means wet flue gas desulfurization technology, dry flue gas desulfurization technology, atmospheric fluidized bed combustion technology, and oil hydrodesulfurization technology.

Distillate oil means fuel oil that complies with the specifications for fuel oil numbers 1 or 2, as defined by the American Society for Testing and Materials in ASTM D396–78, "Standard Specification for Fuel Oils" (incorporated by reference—see § 60.17).

Dry flue gas desulfurization technology means a sulfur dioxide (SO_2) control system that is located between the steam generating unit and the exhaust vent or stack, and that removes sulfur oxides from the combustion gases of the steam generating unit by contacting the combustion gases with an alkaline slurry or solution and forming a dry powder material. This definition includes devices where the dry powder material is subsequently converted to another form. Alkaline reagents used in dry flue gas desulfurization systems include, but are not limited to, lime and sodium compounds.

Duct burner means a device that combusts fuel and that is placed in the exhaust duct from another source (such as a stationary gas turbine, internal combustion engine, kiln, etc.) to allow the firing of additional fuel to heat the exhaust gases before the exhaust gases enter a steam generating unit.

Emerging technology means any SO_2 control system that is not defined as a conventional technology under this section, and for which the owner or operator of the affected facility has received approval from the Administrator to operate as an emerging technology under § 60.48c(a)(4).

Federally enforceable means all limitations and conditions that are enforceable by the Administrator, including the requirements of 40 CFR Parts 60 and 61, requirements within any applicable State implementation plan, and any permit requirements established under 40 CFR 52.21 or under 40 CFR 51.18 and 40 CFR 51.24.

Fluidized bed combustion technology means a device wherein fuel is distributed onto a bed (or series of beds) of limestone aggregate (or other sorbent materials) for combustion; and these materials are forced upward in the device by the flow of combustion air and the gaseous products of combustion. Fluidized bed combustion technology includes, but is not limited to, bubbling bed units and circulating bed units.

Fuel pretreatment means a process that removes a portion of the sulfur in a fuel before combustion of the fuel in a steam generating unit.

Heat input means heat derived from combustion of fuel in a steam generating unit and does not include the heat derived from preheated combustion air, recirculated flue gases, or exhaust gases from other sources (such as stationary gas turbines, internal combustion engines, and kilns).

Heat transfer medium means any material that is used to transfer heat from one point to another point.

Maximum design heat input capacity means the ability of a steam generating unit to combust a stated maximum amount of fuel (or combination of fuels) on a steady state basis as determined by the physical design and characteristics of the steam generating unit.

Natural gas means (1) a naturally occurring mixture of hydrocarbon and nonhydrocarbon gases found in geologic formations beneath the earth's surface, of which the principal constituent is methane, or (2) liquefied petroleum (LP) gas, as defined by the American Society for Testing and Materials in ASTM D1835–86, "Standard Specification for Liquefied Petroleum Gases" (incorporated by reference—see § 60.17).

Noncontinental area means the State of Hawaii, the Virgin Islands, Guam, American Samoa, the Commonwealth of Puerto Rico, or the Northern Mariana Islands.

Oil means crude oil or petroleum, or a liquid fuel derived from crude oil or petroleum, including distillate oil and residual oil.

Potential sulfur dioxide emission rate means the theoretical SO_2 emissions (nanograms per joule [ng/J], or pounds per million Btu [lb/million Btu] heat input) that would result from combusting fuel in an uncleaned state and without using emission control systems.

Process heater means a device that is primarily used to heat a material to initiate or promote a chemical reaction in which the material participates as a reactant or catalyst.

Residual oil means crude oil, fuel oil that does not comply with the specifications under the definition of distillate oil, and all fuel oil numbers 4, 5, and 6, as defined by the American Society for Testing and Materials in ASTM D396–78, "Standard Specification for Fuel Oils" (incorporated by reference—see § 60.17).

Steam generating unit means a device that combusts any fuel and produces steam or heats water or any other heat transfer medium. This term includes any duct burner that combusts fuel and is part of a combined cycle system. This term does not include process heaters as defined in this subpart.

Steam generating unit operating day means a 24-hour period between 12:00 midnight and the following midnight during which any fuel is combusted at any time in the steam generating unit. It is not necessary for fuel to be combusted continuously for the entire 24-hour period.

Wet flue gas desulfurization technology means an SO_2 control system that is located between the steam generating unit and the exhaust vent or stack, and that removes sulfur oxides from the combustion gases of the steam generating unit by contacting the combustion gases with an alkaline slurry or solution and forming a liquid material. This definition includes devices where the liquid material is subsequently converted to another form. Alkaline reagents used in wet flue gas desulfurization systems include, but are not limited to, lime, limestone, and sodium compounds.

Wet scrubber system means any emission control device that mixes an aqueous stream or slurry with the exhaust gases from a steam generating unit to control emissions of particulate matter (PM) or SO_2.

Wood means wood, wood residue, bark, or any derivative fuel or residue thereof, in any form, including but not limited to sawdust, sanderdust, wood chips, scraps, slabs, millings, shavings, and processed pellets made from wood or other forest residues.

[55 FR 37683, Sept. 12, 1990, as amended at 61 FR 20736, May 8, 1996]

§ 60.42c Standard for sulfur dioxide.

(a) Except as provided in paragraphs (b), (c), and (e) of this section, on and after the date on which the initial performance test is completed or required to be completed under § 60.8 of this part, whichever date comes first, the owner the operator of an affected facility that combusts only coal shall neither: (1) cause to be discharged into the atmosphere from that affected facility any gases that contain SO_2 in excess of 10 percent (0.10) of the potential SO_2 emission rate (90 percent reduction); nor (2) cause to be discharged into the atmosphere from that affected facility any gases that contain SO_2 in excess of 520 ng/J (1.2 lb/million Btu) heat input. If coal is combusted with other fuels, the affected facility is subject to the 90 percent SO_2 reduction requirement specified in this paragraph and the emission limit is determined pursuant to paragraph (e)(2) of this section.

(b) Except as provided in paragraphs (c) and (e) of this section, on and after the date on which the initial performance test is completed or required to be completed under § 60.8 of this part, whichever date comes first, the owner or operator of an affected facility that:

(1) Combusts coal refuse alone in a fluidized bed combustion steam generating unit shall neither:

(i) Cause to be discharged into the atmosphere from that affected facility any gases that contain SO_2 in excess of 20 percent (0.20) of the potential SO_2 emission rate (80 percent reduction); nor

(ii) Cause to be discharged into the atmosphere from that affected facility any gases that contain SO_2 in excess of 520 ng/J (1.2 lb/million Btu) heat input. If coal is fired with coal refuse, the affected facility is subject to paragraph (a) of this section. If oil or any other fuel (except coal) is fired with coal refuse, the affected facility is subject to the 90 percent SO_2 reduction requirement specified in paragraph (a) of this section and the emission limit determined pursuant to paragraph (e)(2) of this section.

(2) Combusts only coal and that uses an emerging technology for the control of SO_2 emissions shall neither:

(i) Cause to be discharged into the atmosphere from that affected facility any gases that contain SO_2 in excess of 50 percent (0.50) of the potential SO_2 emission rate (50 percent reduction); nor

(ii) Cause to be discharged into the atmosphere from that affected facility any gases that contain SO_2 in excess of 260 ng/J (0.60 lb/million Btu) heat input. If coal is combusted with other fuels, the affected facility is subject to the 50 percent SO_2 reduction requirement specified in this paragraph and the emission limit determined pursuant to paragraph (e)(2) of this section.

(c) On and after the date on which the initial performance test is completed or required to be completed under § 60.8 of this part, whichever date comes first, no owner or operator of an affected facility that combusts coal, alone or in combination with any other fuel, and is listed in paragraphs (c)(1), (2), (3), or (4) of this section shall cause to be discharged into the atmosphere from that affected facility any gases that contain SO_2 in excess of the emission limit determined pursuant to paragraph (e)(2) of this section. Percent reduction requirements are not applicable to affected facilities under this paragraph.

(1) Affected facilities that have a heat input capacity of 22 MW (75 million Btu/hr) or less.

(2) Affected facilities that have an annual capacity for coal of 55 percent (0.55) or less and are subject to a Federally enforceable requirement limiting operation of the affected facility to an annual capacity factor for coal of 55 percent (0.55) or less.

(3) Affected facilities located in a noncontinental area.

(4) Affected facilities that combust coal in a duct burner as part of a combined cycle system where 30 percent (0.30) or less of the heat entering the steam generating unit is from combustion of coal in the duct burner and 70 percent (0.70) or more of the heat entering the steam gen erating unit is from exhaust gases entering the duct burner.

(d) On and after the date on which the initial performance test is completed or required to be completed under § 60.8 of this part, whichever date comes first, no owner or operator of an affected facility that combusts oil shall cause to be discharged into the atmosphere from that affected facility any gases that contain SO_2 in excess of 215 ng/J (0.50 lb/million Btu) heat input; or, as an alternative, no owner or operator of an affected facility that combusts oil shall combust oil in the affected facility that contains greater than 0.5 weight percent sulfur. The percent reduction requirements are not applicable to affected facilities under this paragraph.

(e) On and after the date on which the initial performance test is completed or required to be completed under § 60.8 of this part, whichever date comes first, no owner or operator of an affected facility that combusts coal, oil, or coal and oil with any other fuel shall cause to be discharged into the atmosphere from that affected facility any gases that contain SO_2 in excess of the following:

(1) The percent of potential SO_2 emission rate required under paragraph (a) or (b)(2) of this section, as applicable, for any affected facility that

(i) Combusts coal in combination with any other fuel,

(ii) Has a heat input capacity greater than 22 MW (75 million Btu/hr), and

(iii) Has an annual capacity factor for coal greater than 55 percent (0.55); and

(2) The emission limit determined according to the following formula for any affected facility that combusts coal, oil, or coal and oil with any other fuel:

$$E_s=(K_aH_a+K_bH_b+K_cH_c)/H_a+H_b+H_c)$$

where:

E_s is the SO_2 emission limit, expressed in ng/J or lb/million Btu heat input,

K_a is 520 ng/J (1.2 lb/million Btu),

K_b is 260 ng/J (0.60 lb/million Btu),

K_c is 215 ng/J (0.50 lb/million Btu),

H_a is the heat input from the combustion of coal, except coal combusted in an affected facility subject to paragraph (b)(2) of this section, in Joules (J) [million Btu]

H_b is the heat input from the combustion of coal in an affected facility subject to paragraph (b)(2) of this section, in J (million Btu)

H_c is the heat input from the combustion of oil, in J (million Btu).

(f) Reduction in the potential SO_2 emission rate through fuel pretreatment is not credited toward the percent reduction requirement under paragraph (b)(2) of this section unless:

(1) Fuel pretreatment results in a 50 percent (0.50) or greater reduction in the potential SO_2 emission rate; and

(2) Emissions from the pretreated fuel (without either combustion-or post-combustion SO_2 control) are equal to or less than the emission limits specified under paragraph (b)(2) of this section.

(g) Except as provided in paragraph (h) of this section, compliance with the percent reduction requirements, fuel oil sulfur limits, and emission limits of this section shall be determined on a 30-day rolling average basis.

(h) For affected facilities listed under paragraphs (h)(1), (2), or (3) of this section, compliance with the emission limits or fuel oil sulfur limits under this section may be determined based on a certification from the fuel supplier, as described under § 60.48c(f)(1), (2), or (3), as applicable.

(1) Distillate oil-fired affected facilities with heat input capacities between 2.9 and 29 MW (10 and 100 million Btu/hr).

(2) Residual oil-fired affected facilities with heat input capacities between 2.9 and 8.7 MW (10 and 30 million Btu/hr).

(3) Coal-fired facilities with heat input capacities between 2.9 and 8.7 MW (10 and 30 million Btu/hr).

(i) The SO_2 emission limits, fuel oil sulfur limits, and percent reduction requirements under this section apply at all times, including periods of startup, shutdown, and malfunction.

(j) Only the heat input supplied to the affected facility from the combustion of coal and oil is counted under this section. No credit is provided for the heat input to the affected facility from wood or other fuels or for heat derived from exhaust gases from other sources, such as stationary gas turbines, internal combustion engines, and kilns.

§ 60.43c Standard for particulate matter.

(a) On and after the date on which the initial performance test is completed or required to be completed under § 60.8 of this part, whichever date comes first, no owner or operator of an affected facility that combusts coal or combusts mixtures of coal with other fuels and has a heat input capacity of 8.7 MW (30 million Btu/hr) or greater, shall cause to be discharged into the atmosphere from that affected facility any gases that contain PM in excess of the following emission limits:

(1) 22 ng/J (0.05 lb/million Btu) heat input if the affected facility combusts only coal, or combusts coal with other fuels and has an annual capacity factor for the other fuels of 10 percent (0.10) or less.

(2) 43 ng/J (0.10 lb/million Btu) heat imput if the affected facility combusts coal with other fuels, has an annual capacity factor for the other fuels greater than 10 percent (0.10), and is subject to a federally enforceable requirement limiting operation of the affected facility to an annual capacity factor greater than 10 percent (0.10) for fuels other than coal.

(b) On and after the date on which the initial performance test is completed or required to be completed under § 60.8 of this part, whichever date comes first, no owner or operator of an affected facility that combusts wood or combusts mixtures of wood with other fuels (except coal) and has a heat input capacity of 8.7 MW (30 million Btu/hr) or greater, shall cause to be discharged into the atmosphere from that affected facility any gases that contain PM in excess of the following emissions limits:

(1) 43 ng/J (0.10 lb/million Btu) heat input if the affected facility has an annual capacity factor for wood greater than 30 percent (0.30); or

(2) 130 ng/J (0.30 lb/million Btu) heat input if the affected facility has an annual capacity factor for wood of 30 percent (0.30) or less and is subject to a federally enforceable requirement limiting operation of the affected facility to an annual capacity factor for wood of 30 percent (0.30) or less.

(c) On and after the date on which the initial performance test is completed or required to be completed under § 60.8 of this part, whichever

date comes first, no owner or operator of an affected facility that combusts coal, wood, or oil and has a heat input capacity of 8.7 MW (30 million Btu/hr) or greater shall cause to be discharged into the atmosphere from that affected facility any gases that exhibit greater than 20 percent opacity (6-minute average), except for one 6-minute period per hour of not more than 27 percent opacity.

(d) The PM and opacity standards under this section apply at all times, except during periods of startup, shutdown, or malfunction.

§ 60.44c Compliance and performance test methods and procedures for sulfur dioxide.

(a) Except as provided in paragraphs (g) and (h) of this section and in § 60.8(b), performance tests required under § 60.8 shall be conducted following the procedures specified in paragraphs (b), (c), (d), (e), and (f) of this section, as applicable. Section 60.8(f) does not apply to this section. The 30-day notice required in § 60.8(d) applies only to the initial performance test unless otherwise specified by the Administrator.

(b) The initial performance test required under § 60.8 shall be conducted over 30 consecutive operating days of the steam generating unit. Compliance with the percent reduction requirements and SO_2 emission limits under § 60.42c shall be determined using a 30-day average. The first operating day included in the initial performance test shall be scheduled within 30 days after achieving the maximum production rate at which the affect facility will be operated, but not later than 180 days after the initial startup of the facility. The steam generating unit load during the 30-day period does not have to be the maximum design heat input capacity, but must be representative of future operating conditions.

(c) After the initial performance test required under paragraph (b) and § 60.8, compliance with the percent reduction requirements and SO_2 emission limits under § 60.42c is based on the average percent reduction and the average SO_2 emission rates for 30 consecutive steam generating unit operating days. A separate performance test is completed at the end of each steam generating unit operating day, and a new 30-day average percent reduction and SO_2 emission rate are calculated to show compliance with the standard.

(d) If only coal, only oil, or a mixture of coal and oil is combusted in an affected facility, the procedures in Method 19 are used to determine the hourly SO_2 emission rate (E_{ho}) and the 30-day average SO_2 emission rate (E_{ao}). The hourly averages used to compute the 30-day averages are obtained from the continuous emission monitoring system (CEMS). Method 19 shall be used to calculate E_{ao} when using daily fuel sampling or Method 6B.

(e) If coal, oil, or coal and oil are combusted with other fuels:

(1) An adjusted E_{ho} ($E_{ho}°$) is used in Equation 19–19 of Method 19 to compute the adjusted E_{ao} ($E_{ao}°$). The $E_{ho}°$ is computed using the following formula:

$$E_{ho}°=[E_{ho} - E_w(1 - X_k)]/X_k$$

where:

$E_{ho}°$ is the adjusted E_{ho}, ng/J (lb/million Btu)

E_{ho} is the hourly SO_2 emission rate, ng/J (lb/million Btu)

E_w is the SO_2 concentration in fuels other than coal and oil combusted in the affected facility, as determined by fuel sampling and analysis procedures in Method 9, ng/J (lb/million Btu). The value E_w for each fuel lot is used for each hourly average during the time that the lot is being combusted. The owner or operator does not have to measure E_w if the owner or operator elects to assume E_w=0.

X_k is the fraction of the total heat input from fuel combustion derived from coal and oil, as determined by applicable procedures in Method 19.

(2) The owner or operator of an affected facility that qualifies under the provisions of § 60.42c(c) or (d) [where percent reduction is not required] does not have to measure the parameters E_w or X_k if the owner or operator of the affected facility elects to measure emission rates of the coal or oil using the fuel sampling and analysis procedures under Method 19.

(f) Affected facilities subject to the percent reduction requirements under § 60.42c(a) or (b) shall determine compliance with the SO_2 emission limits under § 60.42c pursuant to paragraphs (d) or (e) of this section, and shall determine compliance with the percent reduction requirements using the following procedures:

(1) If only coal is combusted, the percent of potential SO_2 emission rate is computed using the following formula:

$$\%P_s=100(1 - \%R_g/100)(1 - \%R_f/100)$$

where

$\%P_s$ is the percent of potential SO_2 emission rate, in percent

$\%R_g$ is the SO_2 removal efficiency of the control device as determined by Method 19, in percent

$\%R_f$ is the SO_2 removal efficiency of fuel pretreatment as determined by Method 19, in percent

(2) If coal, oil, or coal and oil are combusted with other fuels, the same procedures required in paragraph (f)(1) of this section are used, except as provided for in the following:

(i) To compute the $\%P_s$, an adjusted $\%R_g$ ($\%R_g°$) is computed from $E_{ao}°$ from paragraph (e)(1) of this section and an adjusted average SO_2 inlet rate ($E_{ai}°$) using the following formula:

$$\%R_g°=100\ [1.0 - E_{ao}°/E_{ai}°)]$$

where:

$\%R_g°$ is the adjusted $\%R_g$, in percent

$E_{ao}°$ is the adjusted E_{ao}, ng/J (lb/million Btu)

$E_{ai}°$ is the adjusted average SO_2 inlet rate, ng/J (lb/million Btu)

(ii) To compute $E_{ai}°$, an adjusted hourly SO_2 inlet rate ($E_{hi}°$) is used. The $E_{hi}°$ is computed using the following formula:

$$E_{hi}°=[E_{hi} \cdot E_w (1 - X_k)]/X_k$$

where:

$E_{hi}°$ is the adjusted E_{hi}, ng/J (lb/million Btu)

E_{hi} is the hourly SO_2 inlet rate, ng/J (lb/million Btu)

E_w is the SO_2 concentration in fuels other than coal and oil combusted in the affected facility, as determined by fuel sampling and analysis procedures in Method 19, ng/J (lb/million Btu). The value E_w for each fuel lot is used for each hourly average during the time that the lot is being combusted. The owner or operator does not have to measure E_w if the owner or operator elects to assume $E_w = 0$.

X_k is the fraction of the total heat input from fuel combustion derived from coal and oil, as determined by applicable procedures in Method 19.

(g) For oil-fired affected facilities where the owner or operator seeks to demonstrate compliance with the fuel oil sulfur limits under § 60.42c based on shipment fuel sampling, the initial performance test shall consist of sampling and analyzing the oil in the initial tank of oil to be fired in the steam generating unit to demonstrate that the oil contains 0.5 weight percent sulfur or less. Thereafter, the owner or operator of the affected facility shall sample the oil in the fuel tank after each new shipment of oil is received, as described under § 60.46c(d)(2).

(h) For affected facilities subject to § 60.42c(h)(1), (2), or (3) where the owner or operator seeks to demonstrate compliance with the SO_2 standards based on fuel supplier certification, the performance test shall consist of the certification, the certification from the fuel supplier, as described under § 60.48c(f)(1), (2), or (3), as applicable.

(i) The owner or operator of an affected facility seeking to demonstrate compliance with the SO_2 standards under § 60.42c(c)(2) shall demonstrate the maximum design heat input capacity of the steam generating unit by operating the steam generating unit at this capacity for 24 hours. This demonstration shall be made during the initial performance test, and a subsequent demonstration may be requested at any other time. If the demonstrated 24-hour averaged firing rate for the affected facility is less than the maximum design heat input capacity stated by the manufacturer of the affected facility, the demonstrated 24-hour average firing rate shall be used to determine the annual capacity factor for the affected facility; otherwise, the maximum design heat input capacity provided by the manufacturer shall be used.

(j) The owner or operator of an affected facility shall use all valid SO_2 emissions data in calculating $\%P_s$ and E_{ho} under paragraphs (d), (e), or (f) of this section, as applicable, whether or not the minimum emissions data requirements under § 60.46c(f) are achieved. All valid emissions data, including valid data collected during periods of startup, shutdown, and malfunction, shall be used in calculating $\%P_s$ or E_{ho} pursuant to paragraphs (d), (e), or (f) of this section, as applicable.

§ 60.45c Compliance and performance test methods and procedures for particulate matter.

(a) The owner or operator of an affected facility subject to the PM and/or opacity standards under § 60.43c shall conduct an initial performance test as required under § 60.8, and shall conduct subsequent performance tests as requested by the Administrator, to determine compliance with the standards using the following procedures and reference methods.

(1) Method 1 shall be used to select the sampling site and the number of traverse sampling points. The sampling time for each run shall be at least 120 minutes and the minimum sampling volume shall be 1.7 dry square cubic meters (dscm) [60 dry square cubic feet (dscf)] except that smaller sampling times or volumes may be approved by the Administrator when necessitated by process variables or other factors.

(2) Method 3 shall be used for gas analysis when applying Method 5, Method 5B, of Method 17.

(3) Method 5, Method 5B, or Method 17 shall be used to measure the concentration of PM as follows:

(i) Method 5 may be used only at affected facilities without wet scrubber systems.

(ii) Method 17 may be used at affected facilities with or without wet scrubber systems provided the stack gas temperature does not exceed a temperature of 160 °C (320 °F). The procedures of Sections 2.1 and 2.3 of Method 5B may be used in Method 17 only if Method 17 is used in conjuction with a wet scrubber system. Method 17 shall not be used in conjuction with a wet scrubber system if the effluent is saturated or laden with water droplets.

(iii) Method 5B may be used in conjunction with a wet scrubber system.

(4) For Method 5 or Method 5B, the temperature of the sample gas in the probe and filter holder shall be monitored and maintained at 160 °C (320 °F).

(5) For determination of PM emissions, an oxygen or carbon dioxide measurement shall be obtained simultaneously with each run of Method 5,

Method 5B, or Method 17 by traversing the duct at the same sampling location.

(6) For each run using Method 5, Method 5B, or Method 17, the emission rates expressed in ng/J (lb/million Btu) heat input shall be determined using:

(i) The oxygen or carbon dioxide measurements and PM measurements obtained under this section,

(ii) The dry basis F-factor, and

(iii) The dry basis emission rate calculation procedure contained in Method 19 (appendix A).

(7) Method 9 (6-minute average of 24 observations) shall be used for determining the opacity of stack emissions.

(b) The owner or operator of an affected facility seeking to demonstrate compliance with the PM standards under § 60.43c(b)(2) shall demonstrate the maximum design heat input capacity of the steam generating unit by operating the steam generating unit at this capacity for 24 hours. This demonstration shall be made during the initial performance test, and a subsequent demonstration may be requested at any other time. If the demonstrated 24-hour average firing rate for the affected facility is less than the maximum design heat input capacity stated by the manufacturer of the affected facility, the demonstrated 24-hour average firing rate shall be used to determine the annual capacity factor for the affected facility; otherwise, the maximum design heat input capacity provided by the manufacturer shall be used.

§ 60.46c Emission monitoring for sulfur dioxide

(a) Except as provided in paragraphs (d) and (e) of this section, the owner or operator of an affected facility subject to the SO_2 emission limits under § 60.42c shall install, calibrate, maintain, and operate a CEMS for measuring SO_2 concentrations and either oxygen or carbon dioxide concentrations at the outlet of the SO_2 control device (or the outlet of the steam generating unit if no SO_2 control device is used), and shall record the output of the system. The owner or operator of an affected facility subject to the percent reduction requirements under § 60.42c shall measure SO_2 concentrations and either oxygen or carbon dioxide concentrations at both the inlet and outlet of the SO_2 control device.

(b) The 1-hour average SO_2 emission rates measured by a CEM shall be expressed in ng/J or lb/million Btu heat input and shall be used to calculate the average emission rates under § 60.42c. Each 1-hour average SO_2 emission rate must be based on at least 30 minutes of operation and include at least 2 data points representing two 15-minute periods. Hourly SO_2 emission rates are not calculated if the affected facility is operated less than 30 minutes in a 1-hour period and are not counted toward determination of a steam generating unit operating day.

(c) The procedures under § 60.13 shall be followed for installation, evaluation, and operation of the CEMS.

(1) All CEMS shall be operated in accordance with the applicable procedures under Performance Specifications 1, 2, and 3 (appendix B).

(2) Quarterly accuracy determinations and daily calibration drift tests shall be performed in accordance with Procedure 1 (appendix F).

(3) For affected facilities subject to the percent reduction requirements under § 60.42c, the span value of the SO_2 CEMS at the inlet to the SO_2 control device shall be 125 percent of the maximum estimated hourly potential SO_2 emission rate of the fuel combusted, and the span value of the SO_2 CEMS at the outlet from the SO_2 control device shall be 50 percent of the maximum estimated hourly potential SO_2 emission rate of the fuel combusted.

(4) For affected facilities that are not subject to the percent reduction requirements of § 60.42c, the span value of the SO_2 CEMS at the outlet from the SO_2 control device (or outlet of the steam generating unit if no SO_2 control device is used) shall be 125 percent of the maximum estimated hourly potential SO_2 emission rate of the fuel combusted.

(d) As an alternative to operating a CEMS at the inlet to the SO_2 control device (or outlet of the steam generating unit if no SO_2 control device is used) as required under paragraph (a) of this section, an owner or operator may elect to determine the average SO_2 emission rate by sampling the fuel prior to combustion. As an alternative to operating a CEM at the outlet from the SO_2 control device (or outlet of the steam generating unit if no SO_2 control device is used) as required under paragraph (a) of this section, an owner or operator may elect to determine the average SO_2 emission rate by using Method 6B. Fuel sampling shall be conducted pursuant to either paragraph (d)(1) or (d)(2) of this section. Method 6B shall be conducted pursuant to paragraph (d)(3) of this section.

(1) For affected facilities combusting coal or oil, coal or oil samples shall be collected daily in an as-fired condition at the inlet to the steam generating unit and analyzed for sulfur content and heat content according the Method 19. Method 19 provides procedures for converting these measurements into the format to be used in calculating the average SO_2 input rate.

(2) As an alternative fuel sampling procedure for affected facilities combusting oil, oil samples may be collected from the fuel tank for each steam generating unit immediately after the fule tank is filled and before any oil is combusted. The owner or operator of the affected facility shall analyze the oil sample to determine the sulfur con-

tent of the oil. If a partially empty fuel tank is refilled, a new sample and analysis of the fuel in the tank would be required upon filling. Results of the fuel analysis taken after each new shipment of oil is received shall be used as the daily value when calculating the 30-day rolling average until the next shipment is received. If the fuel analysis shows that the sulfur content in the fuel tank is greater than 0.5 weight percent sulfur, the owner or operator shall ensure that the sulfur content of subsequent oil shipments is low enough to cause the 30-day rolling average sulfur content to be 0.5 weight percent sulfur or less.

(3) Method 6B may be used in lieu of CEMS to measure SO_2 at the inlet or outlet of the SO_2 control system. An initial stratification test is required to verify the adequacy of the Method 6B sampling location. The stratification test shall consist of three paired runs of a suitable SO_2 and carbon dioxide measurement train operated at the candidate location and a second similar train operated according to the procedures in § 3.2 and the applicable procedures in section 7 of Performance Specification 2 (appendix B). Method 6B, Method 6A, or a combination of Methods 6 and 3 or Methods 6C and 3A are suitable measurement techniques. If Method 6B is used for the second train, sampling time and timer operation may be adjusted for the stratification test as long as an adequate sample volume is collected; however, both sampling trains are to be operated similarly. For the location to be adequate for Method 6B 24-hour tests, the mean of the absolute difference between the three paired runs must be less than 10 percent (0.10).

(e) The monitoring requirements of paragraphs (a) and (d) of this section shall not apply to affected facilities subject to § 60.42c(h) (1), (2), or (3) where the owner or operator of the affected facility seeks to demonstrate compliance with the SO_2 standards based on fuel supplier certification, as described under § 60.48c(f) (1), (2), or (3), as applicable.

(f) The owner or operator of an affected facility operating a CEMS pursuant to paragraph (a) of this section, or conducting as-fired fuel sampling pursuant to paragraph (d)(1) of this section, shall obtain emission data for at least 75 percent of the operating hours in at least 22 out of 30 successive steam generating unit operating days. If this minimum data requirement is not met with a single monitoring system, the owner or operator of the affected facility shall supplement the emission data with data collected with other monitoring systems as approved by the Administrator.

§ 60.47c Emission monitoring for particulate matter.

(a) The owner or operator of an affected facility combusting coal, residual oil, or wood that is subject to the opacity standards under § 60.43c shall install, calibrate, maintain, and operate a CEMS for measuring the opacity of the emissions discharged to the atmosphere and record the output of the system.

(b) All CEMS for measuring opacity shall be operated in accordance with the applicable procedures under Performance Specification 1 (appendix B). The span value of the opacity CEMS shall be between 60 and 80 percent.

§ 60.48c Reporting and recordkeeping requirements.

(a) The owner or operator of each affected facility shall submit notification of the date of construction or reconstruction, anticipated startup, and actual startup, as provided by § 60.7 of this part. This notification shall include:

(1) The design heat input capacity of the affected facility and identification of fuels to be combusted in the affected facility.

(2) If applicable, a copy of any Federally enforceable requirement that limits the annual capacity factor for any fuel or mixture of fuels under § 60.42c, or § 60.43c.

(3) The annual capacity factor at which the owner or operator anticipates operating the affected facility based on all fuels fired and based on each individual fuel fired.

(4) Notification if an emerging technology will be used for controlling SO_2 emissions. The Administrator will examine the description of the control device and will determine whether the technology qualifies as an emerging technology. In making this determination, the Administrator may require the owner or operator of the affected facility to submit additional information concerning the control device. The affected facility is subject to the provisions of § 60.42c(a) or (b)(1), unless and until this determination is made by the Administrator.

(b) The owner or operator of each affected facility subject to the SO_2 emission limits of § 60.42c, or the PM or opacity limits of § 60.43c, shall submit to the Administrator the performance test data from the initial and any subsequent performance tests and, if applicable, the performance evaluation of the CEMS using the applicable performance specifications in appendix B.

(c) The owner or operator of each coal-fired, residual oil-fired, or wood-fired affected facility subject to the opacity limits under § 60.43c(c) shall submit excess emission reports for any calendar

quarter for which there are excess emissions from the affected facility. If there are no excess emissions during the calendar quarter, the owner or operator shall submit a report semiannually stating that no excess emissioins occurred during the semiannual reporting period. The initial quarterly report shall be postmarked by the 30th day of the third month following the completion of the initial performance test, unless no excess emissions occur during that quarter. The initial semiannual report shall be postmarked by the 30th day of the sixth month following the completion of the initial performance test, or following the date of the previous quarterly report, as applicable. Each subsequent quarterly or semiannual report shall be postmarked by the 30th day following the end of the reporting period.

(d) The owner or operator of each affected facility subject to the SO_2 emission limits, fuel oil sulfur limits, or percent reduction requirements under § 60.42c shall submit quarterly reports to the Administrator. The initial quarterly report shall be postmarked by the 30th day of the third month following the completion of the initial performance test. Each subsequenty quarterly report shall be postmarked by the 30th day following the end of the reporting period.

(e) The owner or operator of each affected facility subject to the SO_2 emission limits, fuel oil sulfur limits, or percent reduction requirements under § 60.43c shall keep records and submit quarterly reports as required under paragraph (d) of this section, including the following information, as applicable.

(1) Calendar dates covered in the reporting period.

(2) Each 30-day average SO_2 emission rate (ng/J or lb/million Btu), or 30-day average sulfur content (weight percent), calculated during the reporting period, ending with the last 30-day period in the quarter; reasons for any noncompliance with the emission standards; and a description of corrective actions taken.

(3) Each 30-day average percent of potential SO_2 emission rate calculated during the reporting period, ending with the last 30-day period in the quarter; reasons for any noncompliance with the emission standards; and a description of corrective actions taken.

(4) Identification of any steam generating unit operating days for which SO_2 or diluent (oxygen or carbon dioxide) data have not been obtained by an approved method for at least 75 percent of the operating hours; justification for not obtaining sufficient data; and a description of corrective actions taken.

(5) Identification of any times when emissions data have been excluded from the calculation of average emission rates; justification for excluding data; and a description of corrective actions taken if data have been excluded for periods other than those during which coal or oil were not combusted in the steam generating unit.

(6) Identification of the F factor used in calculations, method of determination, and type of fuel combusted.

(7) Identification of whether averages have been obtained based on CEMS rather than manual sampling methods.

(8) If a CEMS is used, identification of any times when the pollutant concentration exceeded the full span of the CEMS.

(9) If a CEMS is used, description of any modifications to the CEMS that could affect the ability of the CEMS to comply with Performance Specifications 2 or 3 (appendix B).

(10) If a CEMS is used, results of daily CEMS drift tests and quarterly accuracy assessments as required under appendix F, Procedure 1.

(11) If fuel supplier certification is used to demonstrate compliance, records of fuel supplier certification as described under paragraph (f)(1), (2), or (3) of this section, as applicable. In addition to records of fuel supplier certifications, the quarterly report shall include a certified statement signed by the owner or operator of the affected facility that the records of fuel supplier certifications submitted represent all of the fuel combusted during the quarter.

(f) Fuel supplier certification shall include the following information:

(1) For distillate oil:

(i) The name of the oil supplier; and

(ii) A statement from the oil supplier that the oil complies with the specifications under the definition of distillate oil in § 60.41c.

(2) For residual oil:

(i) The name of the oil supplier;

(ii) The location of the oil when the sample was drawn for analysis to determine the sulfur content of the oil, specifically including whether the oil was sampled as delivered to the affected facility, or whether the sample was drawn from oil in storage at the oil supplier's or oil refiner's facility, or other location;

(iii) The sulfur content of the oil from which the shipment came (or of the shipment itself); and

(iv) The method used to determine the sulfur content of the oil.

(3) For coal:

(i) The name of the coal supplier;

(ii) The location of the coal when the sample was collected for analysis to determine the properties of the coal, specifically including whether the coal was sampled as delivered to the affected facility or whether the sample was collected from coal in storage at the mine, at a coal preparation plant, at a coal supplier's facility, or at another lo-

cation. The certification shall include the name of the coal mine (and coal seam), coal storage facility, or coal preparation plant (where the sample was collected);

(iii) The results of the analysis of the coal from which the shipment came (or of the shipment itself) including the sulfur content, moisture content, ash content, and heat content; and

(iv) The methods used to determine the properties of the coal.

(g) The owner or operator of each affected facility shall record and maintain records of the amounts of each fuel combusted during each day.

(h) The owner or operator of each affected facility subject to a Federally enforceable requirement limiting the annual capacity factor for any fuel or mixture of fuels under § 60.42c or § 60.43c shall calculate the annual capacity factor individually for each fuel combusted. The annual capacity factor is determined on a 12-month rolling average basis with a new annual capacity factor calculated at the end of the calendar month.

(i) All records required under this section shall be maintained by the owner or operator of the affected facility for a period of two years following the date of such record.

APPENDIX E

Boilers

Code of Federal Regulations
Title 40 - Protection of the Environment
Part 60 - New Source Performance Standards (NSPS)
Appendix A to Part 60 - Test Methods

Method 9

Visual Determination of the Opacity of Emissions from Stationary Sources

1997

13.6=Specific gravity of mercury.
60=sec/min.
100=Conversion to percent.

6.2 Average Dry Gas Meter Temperature and Average Orifice Pressure Drop. See data sheet (Figure 8–2).

6.3 Dry Gas Volume. Correct the sample volume measured by the dry gas meter to standard conditions (20° C and 760 mm Hg or 68° F and 29.92 in. Hg) by using Equation 8–1.

E:GRAPHICS EC01JN92.150

Where:

K_1=0.3858 °K/mm Hg for metric units.
=17.64 °R/in., Hg for English units.

NOTE: If the leak rate observed during any mandatory leak-checks exceeds the specified acceptable rate, the tester shall either correct the value of V_m in Equation 8–1 (as described in Section 6.3 of Method 5), or shall invalidate the test run.

6.4 Volume of Water Vapor and Moisture Content. Calculate the volume of water vapor using Equation 5–2 of Method 5; the weight of water collected in the impingers and silica gel can be directly converted to milliliters (the specific gravity of water is 1 g/ml). Calculate the moisture content of the stack gas, using Equation 5–3 of Method 5. The "Note" in Section 6.5 of Method 5 also applies to this method. Note that if the effluent gas stream can be considered dry, the volume of water vapor and moisture content need not be calculated.

6.5 Sulfuric Acid Mist (including SO_3) Concentration.

E:GRAPHICS EC01JN92.151

Where:

K_2=0.04904 g/milliequivalent for metric units.
=1.081×10^{-4} lb/meq for English units.

6.6 Sulfur Dioxide Concentration.

E:GRAPHICS EC01JN92.152

Where:

K_3=0.03203 g/meq for metric units.
=7.061×10^{-5} lb/meq for English units.

6.7 Isokinetic Variation.

6.7.1 Calculation from Raw Data.

$$I = \frac{100T_s[K_4V_{1c}+(V_mY/T_m)(P_{bar}+\Delta H/13.6)]}{60\theta v_sP_sA_n} \qquad \text{Eq. 8–4}$$

Where:

K_4=0.003464 mm Hg-m³/ml-°K for metric units.
=0.002676 in. Hg-ft³/ml-°R for English units.

6.7.2 Calculation from Intermediate Values.

E:GRAPHICS EC01JN92.153

0where:

K_5=4.320 for metric units.
=0.09450 for English units

6.8 Acceptable Results. If 90 percent <I <110 percent, the results are acceptable. If the results are low in comparison to the standards and I is beyond the acceptable range, the Administrator may opt to accept the results. Use Citation 4 in the Bibliography of Method 5 to make judgments. Otherwise, reject the results and repeat the test.

6.9 Stack Gas Velocity and Volumetric Flow Rate. Calculate the average stack gas velocity and volumetric flow rate, if needed, using data obtained in this method and equations in Sections 5.2 and 5.3 of Method 2.

6.10 Relative Error (RE) for QA Audit Samples. Same as in Method 6, Section 6.4.

7. *Bibliography*

1. Atmospheric Emissions from Sulfuric Acid Manufacturing Processes. U.S. DHEW, PHS, Division of Air Pollution. Public Health Service Publication No. 999–AP–13. Cincinnati, OH. 1965.

2. Corbett, P. F. The Determination of SO_2 and SO_3 in Flue Gases. Journal of the Institute of Fuel. *24:*237–243. 1961.

3. Martin, Robert M. Construction Details of Isokinetic Source Sampling Equipment. Environmental Protection Agency. Research Triangle Park, NC. Air Pollution Control Office Publication No. APTD–0581. April, 1971.

4. Patton, W. F. and J. A. Brink, Jr. New Equipment and Techniques for Sampling Chemical Process Gases. Journal of Air Pollution Control Association. *13:*162. 1963.

5. Rom, J. J. Maintenance, Calibration, and Operation of Isokinetic Source-Sampling Equipment. Office of Air Programs, Environmental Protection Agency. Research Triangle Park, NC. APTD–0576. March, 1972.

6. Hamil, H. F. and D. E. Camann. Collaborative Study of Method for Determination of Sulfur Dioxide Emissions from Stationary Sources (Fossil Fuel-Fired Steam Generators). Environmental Protection Agency. Research Triangle Park, NC. EPA–650/4–74–024. December, 1973.

7. Annual Book of ASTM Standards. Part 31; Water, Atmospheric Analysis. pp. 40–42. American Society for Testing and Materials. Philadelphia, Pa. 1974.

METHOD 9—VISUAL DETERMINATION OF THE OPACITY OF EMISSIONS FROM STATIONARY SOURCES

Many stationary sources discharge visible emissions into the atmosphere; these emissions are usually in the shape of a plume. This method involves the determination of plume opacity by qualified observers. The method includes procedures for the training and certification of observers, and procedures to be used in the field for determination of plume opacity. The appearance of a plume as viewed by an observer depends upon a number of variables, some of which may be controllable and some of which may not be controllable in the field. Variables which can be controlled to an extent to which they no longer exert a significant influence upon plume appearance include: Angle of the observer with respect to the plume; angle of the observer with respect to the sun; point of observation of attached and detached steam plume; and angle of the observer with respect to a plume emitted from a rectangular stack with a large length to width ratio. The method includes specific criteria applicable to these variables.

Other variables which may not be controllable in the field are luminescence and color contrast between the plume and the background against which the plume is viewed. These variables exert an influence upon the appearance of a plume as viewed by an observer, and can

affect the ability of the observer to accurately assign opacity values to the observed plume. Studies of the theory of plume opacity and field studies have demonstrated that a plume is most visible and presents the greatest apparent opacity when viewed against a contrasting background. It follows from this, and is confirmed by field trials, that the opacity of a plume, viewed under conditions where a contrasting background is present can be assigned with the greatest degree of accuracy. However, the potential for a positive error is also the greatest when a plume is viewed under such contrasting conditions. Under conditions presenting a less contrasting background, the apparent opacity of a plume is less and approaches zero as the color and luminescence contrast decrease toward zero. As a result, significant negative bias and negative errors can be made when a plume is viewed under less contrasting conditions. A negative bias decreases rather than increases the possibility that a plant operator will be cited for a violation of opacity standards due to observer error.

Studies have been undertaken to determine the magnitude of positive errors which can be made by qualified observers while reading plumes under contrasting conditions and using the procedures set forth in this method. The results of these studies (field trials) which involve a total of 769 sets of 25 readings each are as follows:

(1) For black plumes (133 sets at a smoke generator), 100 percent of the sets were read with a positive error[1] of less than 7.5 percent opacity; 99 percent were read with a positive error of less than 5 percent opacity.

(2) For white plumes (170 sets at a smoke generator, 168 sets at a coal-fired power plant, 298 sets at a sulfuric acid plant), 99 percent of the sets were read with a positive error of less than 7.5 percent opacity; 95 percent were read with a positive error of less than 5 percent opacity.

The positive observational error associated with an average of twenty-five readings is therefore established. The accuracy of the method must be taken into account when determining possible violations of applicable opacity standards.

1. *Principle and Applicability*

1.1 Principle. The opacity of emissions from stationary sources is determined visually by a qualified observer.

1.2 Applicability. This method is applicable for the determination of the opacity of emissions from stationary sources pursuant to § 60.11(b) and for qualifying observers for visually determining opacity of emissions.

2. *Procedures*

The observer qualified in accordance with section 3 of this method shall use the following procedures for visually determining the opacity of emissions:

2.1 Position. The qualified observer shall stand at a distance sufficient to provide a clear view of the emissions with the sun oriented in the 140° sector to his back. Consistent with maintaining the above requirement, the observer shall, as much as possible, make his observations from a position such that his line of vision is approximately perpendicular to the plume direction, and when observing opacity of emissions from rectangular outlets (e.g., roof monitors, open baghouses, noncircular stacks), approximately perpendicular to the longer axis of the outlet. The observer's line of sight should not include more than one plume at a time when multiple stacks are involved, and in any case the observer should make his observations with his line of sight perpendicular to the longer axis of such a set of multiple stacks (e.g., stub stacks on baghouses).

2.2 Field Records. The observer shall record the name of the plant, emission location, type facility, observer's name and affiliation, a sketch of the observer's position relative to the source, and the date on a field data sheet (Figure 9–1). The time, estimated distance to the emission location, approximate wind direction, estimated wind speed, description of the sky condition (presence and color of clouds), and plume background are recorded on a field data sheet at the time opacity readings are initiated and completed.

2.3 Observations. Opacity observations shall be made at the point of greatest opacity in that portion of the plume where condensed water vapor is not present. The observer shall not look continuously at the plume, but instead shall observe the plume momentarily at 15-second intervals.

2.3.1 Attached Steam Plumes. When condensed water vapor is present within the plume as it emerges from the emission outlet, opacity observations shall be made beyond the point in the plume at which condensed water vapor is no longer visible. The observer shall record the approximate distance from the emission outlet to the point in the plume at which the observations are made.

2.3.2 Detached Steam Plume. When water vapor in the plume condenses and becomes visible at a distinct distance from the emission outlet, the opacity of emissions should be evaluated at the emission outlet prior to the condensation of water vapor and the formation of the steam plume.

2.4 Recording Observations. Opacity observations shall be recorded to the nearest 5 percent at 15-second intervals on an observational record sheet. (See Figure 9–2 for an example.) A minimum of 24 observations shall be recorded. Each momentary observation recorded shall be deemed to represent the average opacity of emissions for a 15-second period.

2.5 Data Reduction. Opacity shall be determined as an average of 24 consecutive observations recorded at 15-second intervals. Divide the observations recorded on the record sheet into sets of 24 consecutive observations. A set is composed of any 24 consecutive observations. Sets need not be consecutive in time and in no case shall two sets overlap. For each set of 24 observations, calculate the average by summing the opacity of the 24 observations and dividing this sum by 24. If an applicable standard specifies an averaging time requiring more than 24 observations, calculate the average for all observations made during the specified time period. Record the average opacity on a record sheet. (See Figure 9–1 for an example.)

3. *Qualifications and Testing*

3.1 Certification Requirements. To receive certification as a qualified observer, a candidate must be tested and demonstrate the ability to assign opacity readings in 5 percent increments to 25 different black plumes and 25 different white plumes, with an error not to exceed 15 percent opacity on any one reading and an average error not to exceed 7.5 percent opacity in each category. Candidates shall be tested according to the procedures de-

[1] For a set, positive error = average opacity determined by observers' 25 observations—average opacity determined from transmissometer's 25 recordings.

scribed in section 3.2. Smoke generators used pursuant to section 3.2 shall be equipped with a smoke meter which meets the requirements of section 3.3.

The certification shall be valid for a period of 6 months, at which time the qualification procedure must be repeated by any observer in order to retain certification.

3.2 Certification Procedure. The certification test consists of showing the candidate a complete run of 50 plumes—25 black plumes and 25 white plumes—generated by a smoke generator. Plumes within each set of 25 black and 25 white runs shall be presented in random order. The candidate assigns an opacity value to each plume and records his observation on a suitable form. At the completion of each run of 50 readings, the score of the candidate is determined. If a candidate fails to qualify, the complete run of 50 readings must be repeated in any retest. The smoke test may be administered as part of a smoke school or training program, and may be preceded by training or familiarization runs of the smoke generator during which candidates are shown black and white plumes of known opacity.

3.3 Smoke Generator Specifications. Any smoke generator used for the purposes of section 3.2 shall be equipped with a smoke meter installed to measure opacity across the diameter of the smoke generator stack. The smoke meter output shall display instack opacity based upon a pathlength equal to the stack exit diameter, on a full 0 to 100 percent chart recorder scale. The smoke meter optical design and performance shall meet the specifications shown in Table 9–1. The smoke meter shall be calibrated as prescribed in section 3.3.1 prior to the conduct of each smoke reading test. At the completion of each test, the zero and span drift shall be checked and if the drift exceeds ±1 percent opacity, the condition shall be corrected prior to conducting any subsequent test runs. The smoke meter shall be demonstrated, at the time of installation, to meet the specifications listed in Table 9–1. This demonstration shall be repeated following any subsequent repair or replacement of the photocell or associated electronic circuitry including the chart recorder or output meter, or every 6 months, whichever occurs first.

TABLE 9–1—SMOKE METER DESIGN AND PERFORMANCE SPECIFICATIONS

Parameter	Specification
a. Light source	Incandescent lamp operated at nominal rated voltage.
b. Spectral response of photocell.	Photopic (daylight spectral response of the human eye—Citation 3).
c. Angle of view	15° maximum total angle.
d. Angle of projection	15° maximum total angle.
e. Calibration error	±3% opacity, maximum.
f. Zero and span drift	±1% opacity, 30 minutes
g. Response time	5 seconds.

3.3.1 Calibration. The smoke meter is calibrated after allowing a minimum of 30 minutes warmup by alternately producing simulated opacity of 0 percent and 100 percent. When stable response at 0 percent or 100 percent is noted, the smoke meter is adjusted to produce an output of 0 percent or 100 percent, as appropriate. This calibration shall be repeated until stable 0 percent and 100 percent readings are produced without adjustment. Simulated 0 percent and 100 percent opacity values may be produced by alternately switching the power to the light source on and off while the smoke generator is not producing smoke.

3.3.2 Smoke Meter Evaluation. The smoke meter design and performance are to be evaluated as follows:

3.3.2.1 Light Source. Verify from manufacturer's data and from voltage measurements made at the lamp, as installed, that the lamp is operated within ±5 percent of the nominal rated voltage.

3.3.2.2 Spectral Response of Photocell. Verify from manufacturer's data that the photocell has a photopic response; i.e., the spectral sensitivity of the cell shall closely approximate the standard spectral-luminosity curve for photopic vision which is referenced in (b) of Table 9–1.

E:GRAPHICS EC01JN92.154

FIGURE 9–2—OBSERVATION RECORD

Page ___ of ___

Company .....
Location .....
Test Number .....
Date.

Observer .....
Type facility .....
Point of emissions .....

Hr.	Min.	Seconds				Steam plume (check if applicable)		Comments
		0	15	30	45	Attached	Detached	
	0							
	1							
	2							
	3							
	4							
	5							
	6							
	7							

Hr.	Min.	Seconds				Steam plume (check if applicable)		Comments
		0	15	30	45	Attached	Detached	
	8							
	9							
	10							
	11							
	12							
	13							
	14							
	15							
	16							
	17							
	18							
	19							
	20							
	21							
	22							
	23							
	24							
	25							
	26							
	27							
	28							
	29							

FIGURE 9–2—OBSERVATION RECORD—(CONTINUED)

Page ___ of ___

Company .....
Location .....
Test Number .....
Date.

Observer .....
Type facility .....
Point of emissions .....

Hr.	Min.	Seconds				Steam plume (check if applicable)		Comments
		0	15	30	45	Attached	Detached	
	30							
	31							
	32							
	33							
	34							
	35							

Hr.	Min.	Seconds				Steam plume (check if applicable)		Comments
		0	15	30	45	Attached	Detached	
	36							
	37							
	38							
	39							
	40							
	41							
	42							
	43							
	44							
	45							
	46							
	47							
	48							
	49							
	50							
	51							
	52							
	53							
	54							
	55							
	56							
	57							
	58							
	59							

3.3.2.3 Angle of View. Check construction geometry to ensure that the total angle of view of the smoke plume, as seen by the photocell, does not exceed 15°. The total angle of view may be calculated from: $\theta = 2 \tan^{-1} d/2L$, where θ=total angle of view; d=the sum of the photocell diameter+the diameter of the limiting aperture; and L=the distance from the photocell to the limiting aperture. The limiting aperture is the point in the path between the photocell and the smoke plume where the angle of view is most restricted. In smoke generator smoke meters this is normally an orifice plate.

3.3.2.4 Angle of Projection. Check construction geometry to ensure that the total angle of projection of the lamp on the smoke plume does not exceed 15°. The total angle of projection may be calculated from: $\theta = 2 \tan^{-1} d/2L$, where θ= total angle of projection; d= the sum of the length of the lamp filament + the diameter of the limiting aperture; and L= the distance from the lamp to the limiting aperture.

3.3.2.5 Calibration Error. Using neutral-density filters of known opacity, check the error between the actual response and the theoretical linear response of the smoke meter. This check is accomplished by first calibrating the smoke meter according to 3.3.1 and then inserting a series of three neutral-density filters of nominal opacity of 20, 50, and 75 percent in the smoke meter pathlength. Filters calibrated within ±2 percent shall be used. Care should be taken when inserting the filters to prevent stray light from affecting the meter. Make a total of five nonconsecutive readings for each filter. The maximum error on any one reading shall be 3 percent opacity.

3.3.2.6 Zero and Span Drift. Determine the zero and span drift by calibrating and operating the smoke generator in a normal manner over a 1-hour period. The drift is measured by checking the zero and span at the end of this period.

3.3.2.7 Response Time. Determine the response time by producing the series of five simulated 0 percent and 100

percent opacity values and observing the time required to reach stable response. Opacity values of 0 percent and 100 percent may be simulated by alternately switching the power to the light source off and on while the smoke generator is not operating.

4. *Bibliography.*

1. Air Pollution Control District Rules and Regulations, Los Angeles County Air Pollution Control District, Regulation IV, Prohibitions, Rule 50.

2. Weisburd, Melvin I., Field Operations and Enforcement Manual for Air, U.S. Environmental Protection Agency, Research Triangle Park, NC. APTD–1100, August 1972, pp. 4.1–4.36.

3. Condon, E.U., and Odishaw, H., Handbook of Physics, McGraw-Hill Co., New York, NY, 1958, Table 3.1, p. 6–52.

ALTERNATE METHOD 1—DETERMINATION OF THE OPACITY OF EMISSIONS FROM STATIONARY SOURCES REMOTELY BY LIDAR

This alternate method provides the quantitative determination of the opacity of an emissions plume remotely by a mobile lidar system (laser radar; Light Detection and Ranging). The method includes procedures for the calibration of the lidar and procedures to be used in the field for the lidar determination of plume opacity. The lidar is used to measure plume opacity during either day or nighttime hours because it contains its own pulsed light source or transmitter. The operation of the lidar is not dependent upon ambient lighting conditions (light, dark, sunny or cloudy).

The lidar mechanism or technique is applicable to measuring plume opacity at numerous wavelengths of laser radiation. However, the performance evaluation and calibration test results given in support of this method apply only to a lidar that employs a ruby (red light) laser [Reference 5.1].

1. *Principle and Applicability*

1.1 Principle. The opacity of visible emissions from stationary sources (stacks, roof vents, etc.) is measured remotely by a mobile lidar (laser radar).

1.2 Applicability. This method is applicable for the remote measurement of the opacity of visible emissions from stationary sources during both nighttime and daylight conditions, pursuant to 40 CFR § 60.11(b). It is also applicable for the calibration and performance verification of the mobile lidar for the measurement of the opacity of emissions. A performance/design specification for a basic lidar system is also incorporated into this method.

1.3 Definitions.

Azimuth angle: The angle in the horizontal plane that designates where the laser beam is pointed. It is measured from an arbitrary fixed reference line in that plane.

Backscatter: The scattering of laser light in a direction opposite to that of the incident laser beam due to reflection from particulates along the beam's atmospheric path which may include a smoke plume.

Backscatter signal: The general term for the lidar return signal which results from laser light being backscattered by atmospheric and smoke plume particulates.

Convergence distance: The distance from the lidar to the point of overlap of the lidar receiver's field-of-view and the laser beam.

Elevation angle: The angle of inclination of the laser beam referenced to the horizontal plane.

Far region: The region of the atmosphere's path along the lidar line-of-sight beyond or behind the plume being measured.

Lidar: Acronym for Light Detection and Ranging.

Lidar range: The range or distance from the lidar to a point of interest along the lidar line-of-sight.

Near region: The region of the atmospheric path along the lidar line-of-sight between the lidar's convergence distance and the plume being measured.

Opacity: One minus the optical transmittance of a smoke plume, screen target, etc.

Pick interval: The time or range intervals in the lidar backscatter signal whose minimum average amplitude is used to calculate opacity. Two pick intervals are required, one in the near region and one in the far region.

Plume: The plume being measured by lidar.

Plume signal: The backscatter signal resulting from the laser light pulse passing through a plume.

$1/R^2$ correction: The correction made for the systematic decrease in lidar backscatter signal amplitude with range.

Reference signal: The backscatter signal resulting from the laser light pulse passing through ambient air.

Sample interval: The time period between successive samples for a digital signal or between successive measurements for an analog signal.

Signal spike: An abrupt, momentary increase and decrease in signal amplitude.

Source: The source being tested by lidar.

Time reference: The time (t_o) when the laser pulse emerges from the laser, used as the reference in all lidar time or range measurements.

2. *Procedures*

The mobile lidar calibrated in accordance with Paragraph 3 of this method shall use the following procedures for remotely measuring the opacity of stationary source emissions:

2.1 Lidar Position. The lidar shall be positioned at a distance from the plume sufficient to provide an unobstructed view of the source emissions. The plume must be at a range of at least 50 meters or three consecutive pick intervals (whichever is greater) from the lidar's transmitter/receiver convergence distance along the line-of-sight. The maximum effective opacity measurement distance of the lidar is a function of local atmospheric conditions, laser beam diameter, and plume diameter. The test position of the lidar shall be selected so that the diameter of the laser beam at the measurement point within the plume shall be no larger than three-fourths the plume diameter. The beam diameter is calculated by Equation (AM1–1):

$$D(\text{lidar})=A+R\phi\leq 0.75\ D(\text{Plume}) \quad \text{(AM1–1)}$$

Where:

D(Plume)=diameter of the plume (cm),

ϕ=laser beam divergence measured in radians

R=range from the lidar to the source (cm)

D(Lidar)=diameter of the laser beam at range R (cm),

A=diameter of the laser beam or pulse where it leaves the laser.

The lidar range, R, is obtained by aiming and firing the laser at the emissions source structure immediately below the outlet. The range value is then determined from the backscatter signal which consists of a signal spike (return from source structure) and the atmospheric backscatter signal [Reference 5.1]. This backscatter signal should be recorded.

APPENDIX F

Boilers

Code of Federal Regulations
Title 40 - Protection of the Environment
Part 60 - New Source Performance Standards (NSPS)

Appendix F to Part 60

Quality Assurance Requirements for Gas Continuous Emission Monitoring Systems Used for Compliance Determination

1997

APPENDIX F TO PART 60—QUALITY ASSURANCE PROCEDURES

PROCEDURE 1. QUALITY ASSURANCE REQUIREMENTS FOR GAS CONTINUOUS EMISSION MONITORING SYSTEMS USED FOR COMPLIANCE DETERMINATION

1. Applicability and Principle

1.1 Applicability. Procedure 1 is used to evaluate the effectiveness of quality control (QC) and quality assurance (QA) procedures and the quality of data produced by any continuous emission monitoring system (CEMS) that is used for determining compliance with the emission standards on a continuous basis as specified in the applicable regulation. The CEMS may include pollutant (e.g., SO_2 and NO_x) and diluent (e.g., O_2 or CO_2) monitors.

This procedure specifies the minimum QA requirements necessary for the control and assessment of the quality of CEMS data submitted to the Environmental Protection Agency (EPA). Source owners and operators responsible for one or more CEMS's used for compliance monitoring must meet these minimum requirements and are encouraged to develop and implement a more extensive QA program or to continue such programs where they already exist.

Data collected as a result of QA and QC measures required in this procedure are to be submitted to the Agency. These data are to be used by both the Agency and the CEMS operator in assessing the effectiveness of the CEMS QC and QA procedures in the maintenance of acceptable CEMS operation and valid emission data.

Appendix F, Procedure 1 is applicable December 4, 1987. The first CEMS accuracy assessment shall be a relative accuracy test audit (RATA) (see section 5) and shall be completed by March 4, 1988 or the date of the initial performance test required by the applicable regulation, whichever is later.

1.2 Principle. The QA procedures consist of two distinct and equally important functions. One function is the assessment of the quality of the CEMS data by estimating accuracy. The other function is the control and improvement of the quality of the CEMS data by implementing QC policies and corrective actions. These two functions form a control loop: When the assessment function indicates that the data quality is inadequate, the control effort must be increased until the data quality is acceptable. In order to provide uniformity in the assessment and reporting of data quality, this procedure explicitly specifies the assessment methods for response drift and accuracy. The methods are based on procedures included in the applicable performance specifications (PS's) in appendix B of 40 CFR part 60. Procedure 1 also requires the analysis of the EPA audit samples concurrent with certain reference method (RM) analyses as specified in the applicable RM's.

Because the control and corrective action function encompasses a variety of policies, specifications, standards, and corrective measures, this procedure treats QC requirements in general terms to allow each source owner or operator to develop a QC system that is most effective and efficient for the circumstances.

2. Definitions

2.1 Continuous Emission Monitoring System. The total equipment required for the determination of a gas concentration or emission rate.

2.2 Diluent Gas. A major gaseous constituent in a gaseous pollutant mixture. For combustion sources, CO_2 and O_2 are the major gaseous constituents of interest.

2.3 Span Value. The upper limit of a gas concentration measurement range that is specified for affected source categories in the applicable subpart of the regulation.

2.4 Zero, Low-Level, and High-Level Values. The CEMS response values related to the source specific span value. Determination of zero, low-level, and high-level values is defined in the appropriate PS in appendix B of this part.

2.5 Calibration Drift (CD). The difference in the CEMS output reading from a reference value after a period of operation during which no unscheduled maintenance, repair or adjustment took place. The reference value may be supplied by a cylinder gas, gas cell, or optical filter and need not be certified.

2.6 Relative Accuracy (RA). The absolute mean difference between the gas concentration or emission rate determined by the CEMS and the value determined by the RM's plus the 2.5 percent error confidence coefficient of a series of tests divided by the mean of the RM tests or the applicable emission limit.

3. QC Requirements

Each source owner or operator must develop and implement a QC program. As a minimum, each QC program must include written procedures which should describe in detail, complete, step-by-step procedures and operations for each of the following activities:

1. Calibration of CEMS.
2. CD determination and adjustment of CEMS.
3. Preventive maintenance of CEMS (including spare parts inventory).
4. Data recording, calculations, and reporting.
5. Accuracy audit procedures including sampling and analysis methods.
6. Program of corrective action for malfunctioning CEMS.

As described in Section 5.2, whenever excessive inaccuracies occur for two consecutive quarters, the source owner or operator must revise the current written procedures or modify or replace the CEMS to correct the deficiency causing the excessive inaccuracies.

These written procedures must be kept on record and available for inspection by the enforcement agency.

4. CD Assessment

4.1 CD Requirement. As described in 40 CFR 60.13(d), source owners and operators of CEMS must check, record, and quantify the CD at two concentration values at least once daily (approximately 24 hours) in accordance with the method prescribed by the manufacturer. The CEMS calibration must, as minimum, be adjusted whenever the daily zero (or low-level) CD or the daily high-level CD exceeds two times the limits of the applicable PS's in appendix B of this regulation.

4.2 Recording Requirement for Automatic CD Adjusting Monitors. Monitors that automatically adjust the data to the corrected calibration values (e.g., microprocessor control) must be programmed to record the unadjusted concentration measured in the CD prior to resetting the calibration, if performed, or record the amount of adjustment.

4.3 Criteria for Excessive CD. If either the zero (or low-level) or high-level CD result exceeds twice the applicable drift specification in appendix B for five, consecutive, daily periods, the CEMS is out-of-control. If ei-

ther the zero (or low-level) or high-level CD result exceeds four times the applicable drift specification in appendix B during any CD check, the CEMS is out-of-control. If the CEMS is out-of-control, take necessary corrective action. Following corrective action, repeat the CD checks.

4.3.1 Out-Of-Control Period Definition. The beginning of the out-of-control period is the time corresponding to the completion of the fifth, consecutive, daily CD check with a CD in excess of two times the allowable limit, or the time corresponding to the completion of the daily CD check preceding the daily CD check that results in a CD in excess of four times the allowable limit. The end of the out-of-control period is the time corresponding to the completion of the CD check following corrective action that results in the CD's at both the zero (or low-level) and high-level measurement points being within the corresponding allowable CD limit (i.e., either two times or four times the allowable limit in appendix B).

4.3.2 CEMS Data Status During Out-of-Control Period. During the period the CEMS is out-of-control, the CEMS data may not be used in calculating emission compliance nor be counted towards meeting minimum data availability as required and described in the applicable subpart [e.g., § 60.47a(f)].

4.4 Data Recording and Reporting. As required in § 60.7(d) of this regulation (40 CFR part 60), all measurements from the CEMS must be retained on file by the source owner for at least 2 years. However, emission data obtained on each successive day while the CEMS is out-of-control may not be included as part of the minimum daily data requirement of the applicable subpart [e.g., § 60.47a(f)] nor be used in the calculation of reported emissions for that period.

5. Data Accuracy Assessment

5.1 Auditing Requirements. Each CEMS must be audited at least once each calendar quarter. Successive quarterly audits shall occur no closer than 2 months. The audits shall be conducted as follows:

5.1.1 Relative Accuracy Test Audit (RATA). The RATA must be conducted at least once every four calendar quarters. Conduct the RATA as described for the RA test procedure in the applicable PS in appendix B (e.g., PS 2 for SO_2 and NO_X). In addition, analyze the appropriate performance audit samples received from EPA as described in the applicable sampling methods (e.g., Methods 6 and 7).

5.1.2 Cylinder Gas Audit (CGA). If applicable, a CGA may be conducted in three of four calendar quarters, but in no more than three quarters in succession.

To conduct a CGA: (1) Challenge the CEMS (both pollutant and diluent portions of the CEMS, if applicable) with an audit gas of known concentration at two points within the following ranges:

Audit point	Audit range		
	Pollutant monitors	Diluent monitors for—	
		CO_2	O_2
1	20 to 30% of span value.	5 to 8% by volume.	4 to 6% by volume.
2	50 to 60% of span value.	10 to 14% by volume.	8 to 12% by volume.

Challenge the CEMS three times at each audit point, and use the average of the three responses in determining accuracy.

Use of separate audit gas cylinder for audit points 1 and 2. Do not dilute gas from audit cylinder when challenging the CEMS.

The monitor should be challenged at each audit point for a sufficient period of time to assure adsorption-desorption of the CEMS sample transport surfaces has stabilized.

(2) Operate each monitor in its normal sampling mode, i.e., pass the audit gas through all filters, scrubbers, conditioners, and other monitor components used during normal sampling, and as much of the sampling probe as is practical. At a minimum, the audit gas should be introduced at the connection between the probe and the sample line.

(3) Use audit gases that have been certified by comparision to National Bureau of Standards (NBS) gaseous Standard Reference Materials (SRM's) or NBS/EPA approved gas manufacturer's Certified Reference Materials (CRM's) (See Citation 1) following EPA Traceability Protocol No. 1 (See Citation 2). As an alternative to Protocol No. 1 audit gases, CRM's may be used directly as audit gases. A list of gas manufacturers that have prepared approved CRM's is available from EPA at the address shown in Citation 1. Procedures for preparation of CRM's are described in Citation 1. Procedures for preparation of EPA Traceability Protocol 1 materials are described in Citation 2.

The difference between the actual concentration of the audit gas and the concentration indicated by the monitor is used to assess the accuracy of the CEMS.

5.1.3 Relative Accuracy Audit (RAA). The RAA may be conducted three of four calendar quarters, but in no more than three quarters in succession. To conduct a RAA, follow the procedure described in the applicable PS in appendix B for the relative accuracy test, except that only three sets of measurement data are required. Analyses of EPA performance audit samples are also required.

The relative difference between the mean of the RM values and the mean of the CEMS responses will be used to assess the accuracy of the CEMS.

5.1.4 Other Alternative Audits. Other alternative audit procedures may be used as approved by the Administrator for three of four calendar quarters. One RATA is required at least once every four calendar quarters.

5.2 Excessive Audit Inaccuracy. If the RA, using the RATA, CGA, or RAA exceeds the criteria in section 5.2.3, the CEMS is out-of-control. If the CEMS is out-of-control, take necessary corrective action to eliminate the problem. Following corrective action, the source owner or operator must audit the CEMS with a RATA, CGA, or RAA to determine if the CEMS is operating within the specifications. A RATA must always be used following an out-of-control period resulting from a RATA. The audit following corrective action does not require analysis of EPA performance audit samples. If audit results show the CEMS to be out-of-control, the CEMS operator shall report both the audit showing the CEMS to be out-of-control and the results of the audit following corrective action showing the CEMS to be operating within specifications.

5.2.1 Out-Of-Control Period Definition. The beginning of the out-of-control period is the time corresponding to the completion of the sampling for the RATA, RAA, or CGA. The end of the out-of-control period is the time

corresponding to the completion of the sampling of the subsequent successful audit.

5.2.2 CEMS Data Status During Out-Of-Control Period. During the period the monitor is out-of-control, the CEMS data may not be used in calculating emission compliance nor be counted towards meeting minimum data availabilty as required and described in the applicable subpart [e.g., § 60.47a(f)].

5.2.3 Criteria for Excessive Audit Inaccuracy. Unless specified otherwise in the applicable subpart, the criteria for excessive inaccuracy are:

(1) For the RATA, the allowable RA in the applicable PS in appendix B.

(2) For the CGA, ±15 percent of the average audit value or ±5 ppm, whichever is greater.

(3) For the RAA, ±15 percent of the three run average or ±7.5 percent of the applicable standard, whichever is greater.

5.3 Criteria for Acceptable QC Procedure. Repeated excessive inaccuracies (i.e., out-of-control conditions resulting from the quarterly audits) indicates the QC procedures are inadequate or that the CEMS is incapable of providing quality data. Therefore, whenever excessive inaccuracies occur for two consective quarters, the source owner or operator must revise the QC procedures (see Section 3) or modify or replace the CEMS.

6. *Calculations for CEMS Data Accuracy*

6.1 RATA RA Calculation. Follow the equations described in Section 8 of appendix B, PS 2 to calculate the RA for the RATA. The RATA must be calculated in units of the applicable emission standard (e.g., ng/J).

6.2 RAA Accuracy Calculation. Use Equation 1–1 to calculate the accuracy for the RAA. The RAA must be calculated in units of the applicable emission standard (e.g., ng/J).

6.3 CGA Accuracy Calculation. Use Equation 1–1 to calculate the accuracy for the CGA, which is calculated in units of the appropriate concentration (e.g., ppm SO_2 or percent O_2). Each component of the CEMS must meet the acceptable accuracy requirement.

$$A = \frac{C_m - C_a}{C_a} \times 100 \qquad \text{Eq. 1–1}$$

where:

A = Accuracy of the CEMS, percent.

C_m = Average CEMS response during audit in units of applicable standard or appropriate concentration.

C_a = Average audit value (CGA certified value or three-run average for RAA) in units of applicable standard or appropriate concentration.

6.4 Example Accuracy Calculations. Example calculations for the RATA, RAA, and CGA are available in Citation 3.

7. *Reporting Requirements*

At the reporting interval specified in the applicable regulation, report for each CEMS the accuracy results from Section 6 and the CD assessment results from Section 4. Report the drift and accuracy information as a Data Assessment Report (DAR), and include one copy of this DAR for each quarterly audit with the report of emissions required under the applicable subparts of this part.

As a minimum, the DAR must contain the following information:

1. Source owner or operator name and address.

2. Identification and location of monitors in the CEMS.

3. Manufacturer and model number of each monitor in the CEMS.

4. Assessment of CEMS data accuracy and date of assessment as determined by a RATA, RAA, or CGA described in Section 5 including the RA for the RATA, the A for the RAA or CGA, the RM results, the cylinder gases certified values, the CEMS responses, and the calculations results as defined in Section 6. If the accuracy audit results show the CEMS to be out-of-control, the CEMS operator shall report both the audit results showing the CEMS to be out-of-control and the results of the audit following corrective action showing the CEMS to be operating within specifications.

5. Results from EPA performance audit samples described in Section 5 and the applicable RM's.

6. Summary of all corrective actions taken when CEMS was determined out-of-control, as described in Sections 4 and 5.

An example of a DAR format is shown in Figure 1.

8. *Bibliography*

1. "A Procedure for Establishing Traceability of Gas Mixtures to Certain National Bureau of Standards Standard Reference Materials." Joint publication by NBS and EPA–600/7–81–010. Available from the U.S. Environmental Protection Agency. Quality Assurance Division (MD–77). Research Triangle Park, NC 27711.

2. "Traceability Protocol for Establishing True Concentrations of Gases Used for Calibration and Audits of Continuous Source Emission Monitors (Protocol Number 1)" June 1978. Section 3.0.4 of the Quality Assurance Handbook for Air Pollution Measurement Systems. Volume III. Stationary Source Specific Methods. EPA–600/4–77–027b. August 1977. U.S. Environmental Protection Agency. Office of Research and Development Publications, 26 West St. Clair Street, Cincinnati, OH 45268.

3. Calculation and Interpretation of Accuracy for Continuous Emission Monitoring Systems (CEMS). Section 3.0.7 of the Quality Assurance Handbook for Air Pollution Measurement Systems, Volume III, Stationary Source Specific Methods. EPA–600/4–77–027b. August 1977. U.S. Environmental Protection Agency. Office of Research and Development Publications, 26 West St. Clair Street, Cincinnati, OH 45268.

FIGURE 1—EXAMPLE FORMAT FOR DATA ASSESSMENT REPORT

Period ending date _____
Year _____
Company name _____
Plant name _____
Source unit no. _____
CEMS manufacturer _____
Model no. _____
CEMS serial no. _____
CEMS type (e.g., in situ) _____
CEMS sampling location (e.g., control device outlet) _____
CEMS span values as per the applicable regulation: _____ (e.g., SO_2 _____ ppm, NO_x _____ ppm). _____

I. Accuracy assessment results (Complete A, B, or C below for each CEMS or for each pollutant and diluent analyzer, as applicable.) If the quarterly audit results show the CEMS to be out-of-control, report the results of both the quarterly audit and the audit following corrective action showing the CEMS to be operating properly.

A. Relative accuracy test audit (RATA) for _____ (e.g., SO_2 in ng/J).

1. Date of audit _____.
2. Reference methods (RM's) used _____ (e.g., Methods 3 and 6).
3. Average RM value _____ (e.g., ng/J, mg/dsm^3, or percent volume).
4. Average CEMS value _____.
5. Absolute value of mean difference [d] _____.
6. Confidence coefficient [CC] _____.
7. Percent relative accuracy (RA) _____ percent.
8. EPA performance audit results:

a. Audit lot number (1) _____ (2) _____
b. Audit sample number (1) _____ (2) _____
c. Results (mg/dsm^3) (1) _____ (2) _____
d. Actual value (mg/dsm^3)* (1) _____ (2) _____
e. Relative error* (1) _____ (2) _____

B. Cylinder gas audit (CGA) for _____ (e.g., SO_2 in ppm).

	Audit point 1	Audit point 2	
1. Date of audit	.....	.....	
2. Cylinder ID number	.....	.....	
3. Date of certification	.....	.....	
4. Type of certification	.....	.....	(e.g., EPA Protocol 1 or CRM).
5. Certified audit value	.....	.....	(e.g., ppm).
6. CEMS response value	.....	.....	(e.g., ppm).
7. Accuracy	.....	.....	percent.

C. Relative accuracy audit (RAA) for _____ (e.g., SO_2 in ng/J).

1. Date of audit _____.
2. Reference methods (RM's) used _____ (e.g., Methods 3 and 6).
3. Average RM value _____ (e.g., ng/J).
4. Average CEMS value _____.
5. Accuracy _____ percent.
6. EPA performance audit results:

a. Audit lot number (1) _____ (2) _____
b. Audit sample number (1) _____ (2) _____
c. Results (mg/dsm^3) (1) _____ (2) _____
d. Actual value (mg/dsm^3) *(1) _____ (2)
e. Relative error* (1) _____ (2) _____

D. Corrective action for excessive inaccuracy.

1. Out-of-control periods.

a. Date(s) _____.
b. Number of days _____.

2. Corrective action taken _____

3. Results of audit following corrective action. (Use format of A, B, or C above, as applicable.)

II. Calibration drift assessment.

A. Out-of-control periods.

1. Date(s) _____.
2. Number of days _____.

B. Corrective action taken _____

[52 FR 21008, June 4, 1987; 52 FR 27612, July 22, 1987, as amended at 56 FR 5527, Feb. 11, 1991]

*To be completed by the Agency.

APPENDIX G

Boilers

San Joaquin Valley
Unified Air Quality Management District

Rule 4304
Equipment Tuning Procedure for
Boilers,
Steam Generators, and
Process Heaters

1997

SJUAPCD RULE 4304 EQUIP. TUNING PROCD. FOR BOILRS, STEAM GENS. &PROCESS HEATERS
LAST REVISED 10/19/95

RULE 4304 - EQUIPMENT TUNING PROCEDURE FOR BOILERS, STEAM GENERATORS,AND PROCESS HEATERS

(Adopted October 19, 1995)

1.0 Purpose

The purpose of this rule is to provide an equipment tuning procedurefor boilers, steam generators and process heaters to control visible emissionsand emissions of both nitrogen oxides (NOx) and carbon monoxide (CO).

2.0 Applicability

This procedure applies to any boiler, steam generator, or process heaterthat requires tuning pursuant to District regulations or permit conditions.

3.0 Incorporation by Reference

The provisions of Attachment 4304-A and Attachment 4304-B are herebyadopted by reference and made a part hereof.

Attachment 4304-A

Equipment Tuning Procedure(1)

for Mechanical Draft Boilers, Steam Generators, and ProcessHeaters

Nothing in this Tuning Procedure shall be construed to require any actor omission that would result in unsafe conditions or would be in violationof any regulation or requirement established by Factory Mutual, IndustrialRisk Insurers, National Fire Prevention Association, the California Departmentof Industrial Relations (Occupational Safety and Health Division), theFederal Occupational Safety and Health Administration, or other relevantregulations and requirements.

A different tuning procedure may be used if it produces equivalent results.Should a different tuning procedure be used, a copy of this procedure shouldbe kept with the unit records for two years and made available to the Districtpersonnel on request.

1. Operate the unit at the firing rate most typical of normal operation.If the unit experiences significant load variations during normal operation,operate it at its average firing rate.

2. At this firing rate, record stack gas temperature, oxygen concentration,and CO concentration (for gaseous fuels) or smoke spot number(2)(for liquid fuels), and observe flame conditions after unit operation stabilizesat the firing rate selected. If the excess oxygen in the stack gas is atthe lower end of the range of typical minimum values(3),and if CO emissions are low and there is no smoke, the unit is probablyoperating at near optimum efficiency - at this particular firing rate.However, complete the remaining portion of this procedure to determinewhether still lower oxygen levels are practical.

3. Increase combustion air flow to the furnace until stack gas oxygenlevels increase by one to two percent over the level measured in Step 2.As in Step 2, record the stack gas temperature, CO

concentration (for gaseousfuels) or smoke spot number (for liquid fuels), and observe flame conditionsfor these higher oxygen levels after boiler operation stabilizes.

4. Decrease combustion air flow until the stack gas oxygen concentrationis at the level measured in step 2. From this level gradually reduce thecombustion air flow, in small increments. After each increment, recordthe stack gas temperature, oxygen concentration, CO concentration (forgaseous fuels) and smoke-spot number (for liquid fuels). Also, observethe flame and record any changes in its condition.

5. Continue to reduce combustion air flow stepwise, until one of theselimits is reached:

   a. Unacceptable flame conditions - such as flame impingement on furnacewalls or burner parts, excessive flame carryover, or flame instability.

   b. Stack gas CO concentrations greater than 400 ppm.

   c. Smoking at the stack.

   d. Equipment-related limitations - such as low windbox/furnace pressuredifferential, built in air-flow limits, etc.

6. Develop an O_2/CO curve (for gaseous fuels) or O_2/smokecurve (for liquid fuels) similar to those shown in Figures 1 and 2 usingthe excess oxygen and CO or smoke-spot number data obtained at each combustionair flow setting.

7. From the curves prepared in Step 6, find the stack gas oxygen levelswhere the CO emissions or smoke-spot number equal the following values:

Fuel	Measurement	Value
Gaseous	CO Emissions	400 ppm
#1 and #2 oils	smoke-spot number	number 1
#4 oil	smoke-spot number	number 2
#5 oil	smoke-spot number	number 3
Other oils	smoke-spot number	number 4

   The above conditions are referred to as the CO or smoke thresholds,or as the minimum excess oxygen levels.

   Compare this minimum value of excess oxygen to the expected value providedby the combustion unit manufacturer. If the minimum level found is substantiallyhigher than the value provided by the combustion unit manufacturer, burneradjustments can probably be made to improve fuel and air mix, thereby allowingoperations with less air.

8. Add 0.5 to 2.0 percent to the minimum excess oxygen level found inStep 7 and reset burner controls to operate automatically at this higherstack gas oxygen level. This margin above the minimum oxygen level accountsfor fuel variations, variations in atmospheric conditions, load changes,and nonrepeatability or play in automatic controls.

9. If the load of the combustion unit varies significantly during normaloperation, repeat Steps 1-8 for firing rates that represent the upper andlower limits of the range of the load. Because control adjustments at onefiring rate may affect conditions at other firing rates, it may not bepossible to establish the optimum excess oxygen level at all firing rates.If this is the case, choose the burner

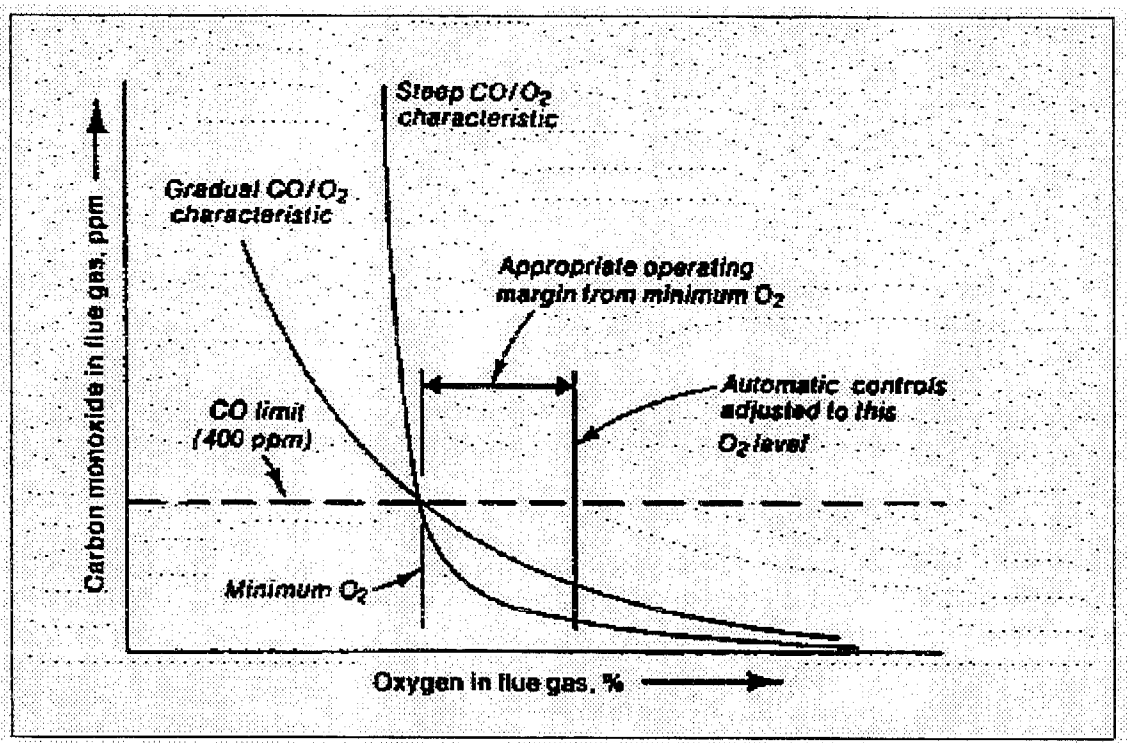

Figure 1 Oxygen/CO Characteristic Curve

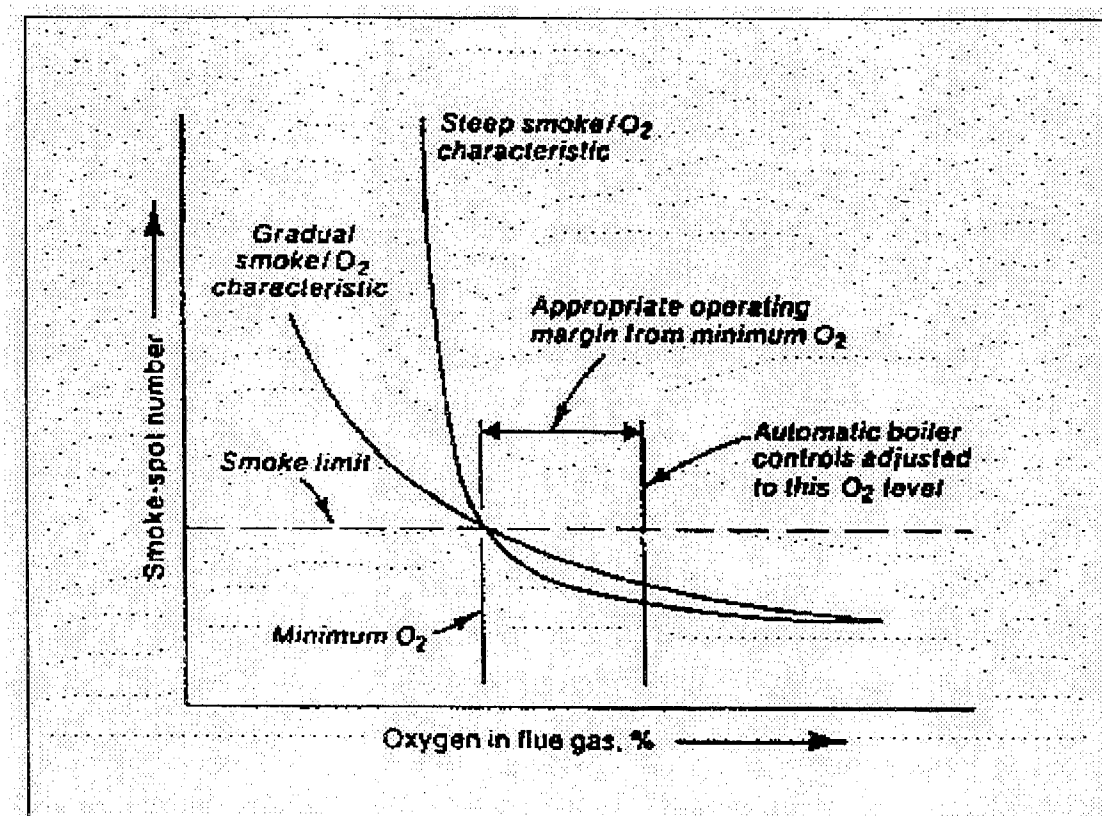

Figure 2 Oxygen/Smoke Characteristic Curve

control settings that give bestperformance over the range of firing rates.If one firing rate predominates,setting should optimize conditions at the rate.

10. Verify that the new settings can accommodate the sudden load changesthat may occur in daily operation without adverse effects. Do this by increasingand decreasing load rapidly while observing the flame and stack. If anyof the conditions in step 5 result, reset the combustion controls to providea slightly higher level of excess oxygen at the affected firing rates.Next verify these new settings in a similar fashion. Then make sure thatthe final control settings are recorded at steady-state operating conditionsfor future reference.

---

1. This tuning procedure is basedon a tune-up procedure developed by KVB, Inc. for EPA.
2. The smoke-spot number can be determinedwith ASTM test method D-2156 or with the Bacharach method. ASTM test methodD-2156 is included is included in a tune-up kit that can be purchased fromthe Bacharach Company.
3. Typical minimum oxygen levels forboilers at high firing rates are:
    1. For natural gas: 0.5 - 3%
    2. For liquid fuels: 2 - 4%

Attachment 4304-B

Equipment Tuning Procedure

for Natural and Induced Draft-Boilers, Steam Generators, andProcess Heaters.

Nothing in this Tuning Procedure shall be construed to require any actor omission that would result in unsafe conditions or would be in violationof any regulation or requirement established by Factory Mutual, IndustrialRisk Insurers, National Fire Prevention Association, the California Departmentof Industrial Relations (Occupational Safety and Health Division), theFederal Occupational Safety and Health Administration, or other relevantregulations and requirements.

A different tuning procedure may be used if it produces equivalent results.Should a different tuning procedure be used, a copy of this procedure shouldbe kept with the unit records for two years and made available to the Districtpersonnel on request.

1. Preliminary Analysis

    a. Check the Operating Pressure or Temperature. Operate the boiler,steam generator, or process heater at the lowest acceptable pressure ortemperature that will satisfy the load demand. This will minimize heatand radiation losses. Determine the pressure or temperature that will beused as a basis for comparative combustion analysis before and after tuneup.

    b. Check Operating Hours. Plan the workload so that the boiler, steamgenerator, or process heater operates only the minimum hours and days necessaryto perform the work required. Fewer operating hours will reduce fuel useand emissions. For units requiring a tuneup to comply with the rule, atotalizing non-resettable fuel meter will be required for each fuel usedand for each boiler, steam generator, and process heater to prove fuelconsumption is less than the heat input limit in Btu per year specifiedin the rule.

    c. Check Air Supply. Sufficient fresh air supply is essential to ensureoptimum combustion and the area of air supply openings must be in compliancewith applicable codes and regulations. Air openings must be kept wide openwhen the burner is firing and clean from restriction to flow.

    d. Check Vent. Proper venting is essential to assure efficient combustion.Insufficient draft or

overdraft promotes hazards and inefficient burning.Check to be sure that vent is in good condition, sized properly and withno obstructions.

e. Combustion Analysis. Perform an "as is" flue gas analysis(O_2, CO, CO_2, etc.) at high and low fire, if possible.In addition to data obtained from combustion analysis, also record thefollowing:

i. Inlet fuel pressure at burner (at high and low fire)

ii. Draft above draft hood or barometric damper

1. Draft hood: high, medium, and low
2. Barometric damper: high, medium, and low

iii. Steam pressure, water temperature, or process fluid pressure ortemperature entering and leaving the boiler, steam generator, or processheater.

iv. Unit rate if meter is available.

With above conditions recorded, make the following checks and correctiveactions as necessary:

2. Checks and Corrections

a. Check burner Condition. Dirty burners or burner orifices will causeboiler, steam generator, or process heater output rate and thermal efficiencyto decrease. Clean burners and burner orifices thoroughly. Also, ensurethat fuel filters and moisture traps in place, clean , and operating properly,to prevent plugging of gas orifices. Confirm proper location and orientationof burner diffuser spuds, gas canes, etc. Look for any burned-off or missingburner parts, and replace as needed.

b. Check for Clean Boiler, Steam Generator, or Process Heater Tubesand Heat transfer Surfaces. External and internal build-up of sedimentand scale of the heating surfaces creates an insulating effect that quicklyreduces unit efficiency. Excessive fuel cost will result if the units isnot kept clean. Clean tube surfaces, remove scale and soot, assure properfluid flow, and flue gas flow.

c. Check Water Treatment & Blowdown Program. Soft water and theproper water or process fluid treatment must be uniformly used to minimizedscale and corrosion. Timely flushing and periodic blowdown must be employedto eliminate sediment and scale build-up on a boiler, steam generator,or process heater.

d. Check for Steam Hot Water or Process Fluid Leaks. Repair all leaksimmediately since even small high pressure leaks quickly lead to consideratefuel, water and steam losses. Be sure there are no leaks through the blow-offdrains, safety valve, by-pass lines or at the feed pump, if used.

3. Safety Checks

a. Test primary and secondary low water level controls.

b. Check operating and limit pressure and temp. controls.

c. Check safety valve pressure and capacity to meet boiler, steam generator,or process heater requirements.

d. Check limit safety control and spill switch.

4. Adjustments

While taking combustion readings with a warmed up boiler, steam generator,or process heater at high fire perform checks and adjustments as follows:

a. Adjust unit to fire at rated capacity. Record fuel manifold pressure.

b. Adjust draft and/or fuel pressure to obtain acceptable, clean combustionat both high, medium and low fire. Carbon monoxide value should alwaysbe below 400 ppm at 3% O_2. If CO is high make necessary adjustment.Check to ensure boiler, steam generator, or process heater light offs aresmooth and safe. A reduced fuel pressure test at both high and low fireshould be conducted in accordance with the manufacturers instructions andmaintenance manuals.

c. Check and adjust operation of modulation controller. Ensure, properefficient and clean combustion through range of firing rates. When aboveadjustments and corrections have been made, record all data.

5. Final Test

Perform a final combustion analysis with a warmed up boiler, steam generator,or process heater at high, medium, and low fire, whenever possible. Inaddition to data from combustion analysis, also check and record:

a. Fuel pressure at burner (High, Medium, and Low).

b. Draft above draft hood or barometric damper (High, Medium, and Low).

c. Steam pressure or water temperature entering and leaving boiler,steam generator, or process heater.

d. Unit rate if meter is available.

When the above checks and adjustments have been made, record data andattach combustion analysis data to boiler, steam generator, or processheater records indicating name and signature of person, title, companyname, company address and date the tuneup was performed.

APPENDIX H

Boilers

Santa Barbara County
Air Pollution Control District

Permit Guidelines for
Boilers,
Process Heaters, and
Steam Generators

1997

PERMIT GUIDELINE DOCUMENT

1. Boilers, Process Heaters, Steam Generators

1.1 Description

This permit guideline document covers the permitting of boilers, process heaters and steam generators. These devices are categorized as external combustion units. These units may be found in varying applications including: hospitals, oil and gas production facilities, universities and others. Those operations that are considered typical are covered by this section. Typical includes devices that combust natural gas, diesel fuel oil and LPG/propane either as primary or backup fuels. Operation of this equipment on other fuels, such as landfill gas, tail gases or other "waste" fuels are not considered to be typical and require a more site-specific analysis.

Source Classification Codes and Standard Industrial Codes vary depending on the process and industry respectively.

1.2 Application Contents

(a) Forms: The forms listed below must be submitted with all permit applications for new or modified devices for which an Authority to Construct ("ATC") permit is required. These forms are also required for devices that are no longer exempt from permit pursuant to Rule 202 (*Exemptions to Rule 201*).

APCD Form-01:	Application
APCD Form-33:	External Combustion Equipment Summary
APCD Form-02:	BACT Summary Form (if BACT is required)
APCD Form-05U:	Authorization of ERCs Use Form (if Offsets are required)

A single APCD Form-33 must be completed for each device being applied for in an ATC application. An example of a completed APCD Form-33 may be found in Attachment "A". For a Permit to Operate ("PTO") application, the applicant need only submit the APCD Form-01 and the required filing fee.

(b) Additional Information The following information is required for processing ATC permit applications (not required for PTO applications if an ATC permit was previously obtained):

- Site and plot plan, with dimensions, showing the location of the combustion unit.
- General description of the business.
- Description of the general purpose of the combustion unit and its associated production and/or process line.
- New Source Review information. Submit information required by Section E of Rule 204 (*Applications*) if BACT, AQIA, Offsets or Health Risk Assessment are required.
- Emissions data: When default emission factors or fuel specifications are not used, provide detailed supporting documentation for the use of the site-specific data. Include: manufacturer guarantees, analyses, source test reports and calculations.
- Manufacturer Data: Where noted on APCD Form-33, provide manufacturer literature, catalog or equivalent information.

1.3 Completeness

Upon receipt of a permit application, the permit engineer will evaluate the application for its completeness. The applicant should use the *External Combustion Completeness Review* checklist (Attachment "B") in preparing the permit application as the permit engineer will use this completeness checklist as the primary criteria for determining the application's completeness. The applicant should consult with APCD staff if there are any questions regarding specific items on the checklist or any other permit related issue. Once deemed complete, the permit engineer will issue a completeness letter to the applicant and will commence processing the application. Please refer to Rule 208 (*Action on Applications - Time Limits*) for a complete description of the completeness determination process and the timelines for permit issuance.

1.4 Applicable Requirements and Standards

The rules and regulations listed below are applicable to boilers, process heaters and steam generators. A brief summary of the applicable requirements and standards are provided. The applicant should refer to each rule for the specific details and requirements. Applicability of individual rules or regulations are dependent upon numerous factors such as burner rating, annual fuel use and date of installation. The applicant should pay particular attention to the requirements of Rule 342.

Rule 201 - Permits Required Requires an Authority to Construct permit for any new or modified combustion unit. Requires a Permit to Operate once an ATC permit is used, or when an exemption is no longer applicable.

Rule 202 - Exemptions to Rule 201 Section G (*Combustion Equipment*) exempts combustion units with a maximum heat input of less than 5 million BTU per hour (HHV basis) if the fuel used is either natural or produced gas which meets the standards of PUC General Order 58-A or liquefied petroleum gas (LPG) which meets Gas Processors Association standards.

Rule 204 - Applications This rule states what information is required for applications. Specific information requirements for BACT, AQIA, Offsets and Health Risk Assessment are listed in the rule.

Rule 206 - Conditional Approval of Authority to Construct or Permit to Operate This rule provides the Control Officer the ability to issue permits subject to specified conditions which ensure that construction and operation of the source complies with all applicable air regulations. Typical permit conditions for boiler, process heaters and steam generators are found in Section 1.7 of this guideline document.

Rule 208 - Actions on Applications - Time Limits This rule specifies the time limits for processing ATC and PTO applications.

Rule 210 - Fees: See Section 1.9 of this guideline document.

Rule 212 - Emission Statements This rule requires an annual report certifying the actual emissions from the prior year and applies to sources with permitted emissions, in the aggregate, in excess of 10 tons per year of NO_x and ROC.

Rule 302 - Visible Emissions This rule prohibits any combustion unit from having visible emissions equal to or greater than the Ringlemann No. 1 opacity standard.

Rule 303 - Nuisance: This rule prohibits any source from creating a public nuisance.

Rule 309 - Specific Contaminants This rule limits: sulfur compound emissions (as SO_2) to 0.20 percent by volume; particulate matter to 0.3 gr/scf (Northern Zone) and 0.1 gr/scf (Southern Zone) both at 12% CO_2; carbon monoxide to 2000ppmvd (Southern Zone only). A "Fuel Burning Equipment" unit is required to be composed of the minimum number of boilers, process heaters, etc., whose simultaneous operations are required for the production of useful heat or power. Specific limits on Fuel Burning Equipment are: sulfur compounds (as SO_2) - 200 lb/hr; nitrogen oxides (as NO_2) - 140 lb/hr and in the Southern Zone for "Equipment" with a rating in excess of 1775 MMBtu/hr, 125 ppmvd for gaseous fuels and 225 ppm for liquid or solid fuels; particulate matter 10 lb/hr.

Rule 311 - Sulfur Content of Fuels This rule limits the sulfur content of fuels. Gaseous Fuels: 15 gr/100 scf (Southern Zone), 50 gr/100 scf (Northern Zone) [total sulfur calculated as H_2S]. Liquid/Solid Fuels: 0.5 percent by weight (both Zones).

Rule 328 - Continuous Emission Monitoring This rule defines the requirements for the use of CEMS. Specific processes (e.g., Fossil Fuel Fired Steam Generators rated over 250 MMBtu/hr) are required to have CEMS. In addition, the rule allows the Control Officer to require a source to install a CEMS when emissions are greater than 5 lb/hr.

Rule 342 - Control of Oxides of Nitrogen From Boilers, Steam Generators and Process Heaters This rule sets emission standards for NO_x and CO and is considered the APCD's RACT rule for boilers, process heaters and steam generators. The rule applies to units rated at 5 MMBtu/hr or greater (HHV based). Applicable units with an annual heat input of less than 9 billion Btu's are exempt from the emission standards, but must comply with the remaining rule requirements. For gas fired (including LPG) units the standards are: NO_x (as NO_2) - 30 ppmvd or 0.036 lb/MMBtu; CO - 400 ppmvd. For non-gas fired units the standards are: NO_x (as NO_2) - 40 ppmvd or 0.052 lb/MMBtu; CO - 400 ppmvd. Compliance source testing is required every two years.

Rule 370 - Potential to Emit - Limitations for Part 70 Sources This rule defines how stationary sources can avoid the requirements of Regulation XIII (*Part 70 Operating Permits*) based on their actual annual emissions.

Reg. VIII - New Source Review This regulation contains both the nonattainment review (NAR) and Prevention of Significant Deterioration (PSD) rules that apply to new of modified sources. Emission thresholds are defined in those rules for when an applicant needs to install Best Available Control Technology (BACT), perform an Air Quality Impact Analysis (AQIA), including the potential need for pre-construction monitoring, and when emission Offsets are required. Typically, BACT is required when the emissions from the unit are 25 lb/day or higher, an AQIA is required when the source's Net Emission Increase (NEI) exceeds 120 lb/day, and emission Offsets are required when the source's NEI exceeds 55 lb/day or 10 tpy. Please refer to the rules of this regulation for specific details.

Reg. XI - New Source Performance Standards There are four NSPS that apply to Steam Generating Units (Subparts D, Da, Db, Dc). In general, compliance with the APCD's RACT and BACT requirements for Steam Generating units ensures compliance with the NSPS. The applicant and permit engineer should review the

applicable NSPS for units rated at 100 MMBtu/hr or greater. See Attachment "C" for a summary of these NSPS.

Reg XIII - Part 70 Operating Permits The federal operating permit program is only applicable to major sources. Specific requirements, such as process/emission monitoring and recordkeeping, are determined on a case-by-case basis.

1.5 Emission Control/Abatement Equipment

Depending on the size and operating scenario for the combustion unit under review, emission controls and fuel specifications may be required. The emission unit may be subject to NSR, RACT and/or NSPS standards. The following are examples of emission control technologies or practices that may apply:

- Low NO_x burners
- Flue gas recirculation
- Selective Catalytic Reduction (SCR)
- Selective Non-catalytic Reduction (SNCR)
- Annual Tuning
- Low Sulfur Fuels (PUC Quality Natural Gas, GPA Specification for LPG)

NSR Best Available Control Technology (BACT) standards may be found in the APCD's BACT Database which is available on the APCD's Internet Web Page at "http://www.apcd.santa-barabra.ca.us/~apcd/eng/nsr/nsr.htm". RACT standards are defined in the APCD's Rule 342. NSPS requirements are found in 40 CFR Part 60 (Subparts D, Da, Db, Dc).

1.6 Emissions

Emissions from external combustion units such as boilers, process heaters and steam generators consist of the criteria pollutants (NO_x, ROC, CO, SO_x, PM, PM_{10}) and a variety of hazardous air pollutants (HAPs) such as heavy metals. Criteria pollutant emission calculations are needed for short term (hourly, daily, ppmv concentrations) and long term (quarterly and annual) rates. The APCD's *External Combustion Emissions Calculation Programs* available for use with permit applications. There are many techniques available for estimating emissions from boilers, process heaters and steam generators. Site specific data (based on actual CEMS or PEMS data), equipment specific (manufacturer) data and material balance data are preferred over source test data and generic emission factors when estimating emissions. The following table[1] defines the preferred and alternative methods for estimating emissions from external combustion units:

Parameter	Preferred Method	Alternative Method(s)
NOx	- CEMS/PEMS data	- Manufacturer data - Stack sampling data - AP-42 Emission Factors
ROC	- Stack Sampling data	- Manufacturer data - AP-42 Emission Factors
CO	- CEMS/PEMS data	- Manufacturer data - Stack sampling data - AP-42 Emission Factors
SOx	- Material Balance	- CEMS/PEMS data - Stack Sampling data
PM/PM10	- Stack Sampling data	- AP-42 Emission Factors

[1] Modification of Table 2.3-1 of "Preferred and Alternative Methods for Estimating Air Emissions from Boilers", Volume II: Chapter 2, Final Report, June 1996, STAPPA/ALAPCO/EPA

For new emission units, site specific CEMS/PEMS data do not exist. In these cases, an alternative method should be selected to estimate emissions for the ATC permit's issuance.

(a) Emission Calculations

General: Emission calculations are needed to determine the applicability of, and compliance with, the APCD, state and federal rules and regulations. For external combustion units, the primary emission calculation involves use of an emission factor coupled with the amount of fuel consumed. The APCD uses emission factors that are "energy" based (i.e., lb/MMBtu). Fuel based emission factors (e.g., lb/MMscf, lb/1000 gal) from USEPA's AP-42 are in fact developed from energy based emission factors. By permitting in this manner, errors due to incorrect fuel heating values are eliminated. All energy based emission factors are reported on a higher heating value (HHV) basis. To convert a lower heating value (LHV) based emission factor to a HHV based emission factor, multiply the LHV based factor by 1.10 for natural gas/LPG fuels and 1.06 for fuel oil #2.

What to Submit All permit applications require daily (lb/day) and annual (tpy) mass emission rate calculations. BACT and AQIA require hourly mass emission calculations (lb/hr). Emission Offsets require quarterly (tpq) mass emission calculations. Compliance calculations for APCD Rules 309 and 311 are not required as long as the fuels consumed are either PUC natural gas, produced gas meeting PUC standards or LPG (propane) meeting GPA standards.

USEPA AP-42 Emission Factors "Uncontrolled" emission factors based on USEPA AP-42 are provided in the tables below for natural gas, propane, butane and diesel fuel #2. **Controlled Rule 342 (RACT) emission factors for NOx are 0.036 lb/MMBtu for natural gas/propane/butane and 0.052 lb/MMBtu for diesel fuel #2. The Rule 342 equivalent emission factor for CO is 0.297 lb/MMBtu for natural gas/LPG and 0.313 lb/MMBtu for diesel fuel #2 (based on 400 ppmvd at 3% O2).**

Natural Gas: Uncontrolled

RATING (MMBtu/hr)	NOx (lb/MMBtu)	CO (lb/MMBtu)	ROC (lb/MMBtu)	PM (lb/MMBtu)	PM10 (lb/MMBtu)
> 100	0.5500	0.0400	0.0014	0.0050	0.0050
10 to 100	0.1400	0.0350	0.0028	0.0137	0.0137
0.3 to < 10	0.1000	0.0210	0.0053	0.0120	0.0120
< 0.3	0.0940	0.0400	0.0073	0.0112	0.0112

Notes:
(a) Emission factors based on USEPA AP-42, 5th Edition (1/95), Chapter 1.4, Tables 1.4-1, 1.4-2 and 1.4-3.
(b) Emission factors converted from fuel to energy basis using heating value of 1,000 Btu/scf (ref: AP-42, Table 1.4-2).
(c) ROC emission factor based on AP-42 TOC emission factor and fraction ROC table below.
(d) Total PM based on sum of filterable and condensable PM.
(e) PM10 fraction is assumed to be 1.0 (ref: AP-42, Chapter 1.4)

Propane/Butane: Uncontrolled

RATING (MMBtu/hr)	NOx (lb/MMBtu)	CO (lb/MMBtu)	ROC (lb/MMBtu)	PM (lb/MMBtu)	PM10 (lb/MMBtu)
≥ 10	0.2100	0.0350	0.0028	0.0137	0.0137
< 10	0.1500	0.0210	0.0053	0.0120	0.0120

Notes:
(a) Emission factors based on USEPA AP-42, 5th Edition (1/95), Chapter 1.5, Table 1.5-2. Per footnote all LPG emissions are assumed the same (except for NOx and SOx) as for natural gas combustion on a heat input basis. NOx factors reflect a correction factor 1.5 which approximates the ratio of propane/butane NOx emissions to natural gas NOx emissions.

Diesel Fuel #2: Uncontrolled

RATING (MMBtu/hr)	NOx (lb/MMBtu)	CO (lb/MMBtu)	ROC (lb/MMBtu)	PM (lb/MMBtu)	PM10 (lb/MMBtu)
≥ 10	0.1429	0.0357	0.0014	0.0143	0.0071
< 10	0.1429	0.0357	0.0024	0.0143	0.0079

Notes:

(a) Emission factors based on USEPA AP-42, 5th Edition (1/95), Chapter 1.3, Tables 1.3-2, 1.3-4 and 1.4-3.
(b) Emission factors converted from fuel to energy basis using heating value of 140,000 Btu/gal (ref: USEPA Background Document for AP-42 Section 1.3)
(c) ROC emission factor based on AP-42 TOC emission factor and fraction ROC table below.
(d) Total PM based on sum of filterable and condensable PM.
(e) PM10 fraction is 0.5 for units rated equal to and above 10 MMBtu/hr and 0.55 for units rated less than 10 MMBtu/hr (ref: AP-42, Chapter 1.3, Table 1.3-7, 1.3-8)
(f) Emission factors for units rated over 100 MMBtu/hr and fired on diesel #2 assumed to be the same as units fired between 10 and 100 MMBtu/hr.

ROC Fractions The APCD definition of reactive organic compounds excludes the compounds methane and ethane. AP-42 emission factors provide hydrocarbon emissions as total organic compounds. As such, the fraction of ROC to TOC is needed to obtain the ROC emission factor. The table below presents the default values used by the APCD as documented in the APCD's *VOC/ROC Emission Factors and Reactivities for Common Source Type* table (April 2, 1997, version 1.0). The emission factors in the above tables are for ROC.

ROC Fraction

	UNIT RATING (MMBtu/hr)			
FUEL	> 100	10 to 100	0.3 to < 10	< 0.3
Natural Gas	0.83	0.48	0.66	0.66
Diesel Fuel #2	0.79	0.79	0.61	0.61

Notes:

(a) Natural gas ROC fraction based on AP-42 Table 1.4-3. Amount of ethane assumed to be negligible per ARB VOC Speciation Manual, 2nd Edition, 8/91), Profile #3.

(b) Diesel #2 ROC fraction based on AP-42 Table 1.3-4. Amount of ethane assumed to be negligible per ARB VOC Speciation Manual, 2nd Edition, 8/91), Profile #504. ROC fraction for > 100 MMBtu/hr assumed the same as units rated from 10 to 100 MMBtu/hr.

(c) Propane/butane fractions same as natural gas.

SOx Emission Factors Emission factors for oxides of sulfur (SO_x reported as SO_2) are based on material balance calculations. For gaseous and liquid fuels, the streamlined equations for determining the SO_x emission factors (in units of lb/MMBtu - HHV basis) is:

$$EF = [0.169] \times \left[\frac{ppmvd\ S}{HHV_g} \right] \quad \text{.....} \quad \text{Gaseous Fuels}$$

$$EF = [20{,}000] \times \left[\frac{wt.\%\ S}{HHV_l} \right] \times [density] \quad \text{.....} \quad \text{Liquid Fuels}$$

where:

ppmvd = concentration of total sulfur (as S) in the gaseous fuel
HHV = higher heating value. Units for HHV_g are Btu/scf, Units for HHV_l are Btu/gal
wt.% S = weight percent of total sulfur (as S) in the liquid fuel
density = density of the liquid fuel (lb/gal)

The basic equations for deriving the emission factors above are found in two APCD documents (*SO_x Emission Factors for Gaseous Fuels* and *SO_x Emission Factors for Liquid Fuels, 1/31/97*). Standard default SO_x emission factors for common fuels are provided below:

FUEL	SO_x Emission Factor (lb/MMBtu)
PUC Natural Gas	0.0137
GPA Commercial Propane	0.0170
GPA HD-5 Propane	0.0113
Produced Gas - Rule 311 South Zone	0.0409
Produced Gas - Rule 311 North Zone	0.1362
Diesel Fuel #2 - Clean Diesel	0.0504
Diesel Fuel #2 - Rule 311	0.5036
Gasoline	0.0285

(b) Example Calculations

Calculations use the emission factor in units of lb/MMBtu (HHV basis) coupled with the fuel use of the combustion unit to determine the mass emission rates. Fuel use equates to the equivalent "heat input" to the combustion unit and is measured in units of million BTU[2]. The heat input is determined by assuming full load operation at the maximum rating of the combustion unit's burner(s) for the time period in question (i.e., 24 hours per day, 2190 hours per quarter and 8760 hours per year). Due to enforceability issues, short-term mass emission calculations (hourly and daily) are always based on maximum usage, unless the potential to emit is limited by a practically enforceable permit condition. For long-term mass emission calculations, the applicant may propose heat input values based on reduced usage from maximum design.

Example: Calculate the NO_x and SO_x emissions from a Rule 342 compliant boiler rated at 27.500 MMBtu/hr fired on PUC Quality Natural Gas.

Step 1: Determine the Heat Input (Q)

Hourly: Q_H = 27.500 MMBtu/hr
Daily: Q_D = (27.500 MMBtu/hr)× (24 hr/day) = 660.000 MMBtu/day
Quarterly Q_Q = (27.500 MMBtu/hr)× (2190 hr/qtr) = 60,225.000 MMBtu/qtr
Annual Q_A = (27.500 MMBtu/hr)× (8760 hr/yr) = 240,900.000 MMBtu/yr

Step 2: Select the Emission Factors (EF)

NOx EF_{NOx} = 0.0360 lb/MMBtu (ref: Rule 342 standard)
SOx EF_{SOx} = 0.0137 lb/MMBtu (ref: APCD default EF for PUC fuel)

Step 3: Calculate the Mass Emissions (E)

Hourly $E_H = EF \times Q_H$ (pounds per hour, lb/hr)
Daily $E_D = EF \times Q_D$ (pounds per day, lb/day)
Quarterly $E_Q = EF \times Q_Q \times$ ton/2000 lb (tons per quarter, tpq)
Annual $E_A = EF \times Q_A \times$ ton/2000 lb (tons per year, tpy)

[2] For example, 1 standard cubic foot of natural gas typically has a heating value of 1050 Btu and 1 gallon of diesel #2 fuel has 140,000 Btu. A "therm" is equivalent to 100,000 Btu (approximately 95 standard cubic feet of natural gas).

NOx E_H = (0.036 lb/MMBtu)× (27.500 MMBtu/hr)
= 0.99 lb/hr

E_D = (0.036 lb/MMBtu)× (660.000 MMBtu/day)
= 23.76 lb/day

E_Q = (0.036 lb/MMBtu)× (60,225.000 MMBtu/qtr)× (ton/2000 lb)
= 1.08 tpq

E_A = (0.036 lb/MMBtu)× (240,900.000 MMBtu/yr)× (ton/2000 lb)
= 4.34 tpy

SOx E_h = 0.38 lb/hr , E_D = 9.04 lb/day , E_Q = 0.41 tpq , E_A = 1.65 tpy

1.7 Typical Permit Conditions

The typical permit conditions that are found in boiler, process heater and steam generator permits that do not require BACT, AQIA or Offsets and are subject to Section D.1 of Rule 342 are presented below. Conditions 4, 5 and 9 are not required for emission units subject to Section D.2 of Rule 342. Conditions only applicable to ATC permits are noted as such.

1. **Heat Input Limits** The hourly, daily and annual heat input limits to the boiler shall not exceed the values listed below. These limits are based on the design rating of the boiler and the annual heat input value as listed in the permit application. Unless otherwise designated by the Control Officer, the following fuel heat content shall be used for determining compliance: PUC natural gas = 1,050 Btu/scf.

Hourly Heat Input	27.500	MMBtu/hour
Daily Heat Input	660.000	MMBtu/day
Annual Heat Input	240,900.000	MMBtu/year

2. **Emissions Limitations** Mass emissions rates resulting from the operation of the equipment listed in this permit shall not exceed the values listed in Table 1. Compliance with this condition shall be based on source testing, fuel usage and the gas utility company's total sulfur content analysis of their fuel.

Table 1
Permitted Emissions

-	NO_x	ROC	CO	SO_x	PM	PM_{10}
Boiler #A						
lb/day	23.76	1.85	196.02	9.04	9.04	9.04
tons/year	4.34	0.34	35.77	1.65	1.65	1.65

3. **PUC Quality Natural Gas Fuel Sulfur Limit** The total sulfur and hydrogen sulfide (H_2S) content (both calculated as H_2S at standard conditions, 60° F and 14.7 psia) of the PUC quality natural gas fuel shall not exceed 80 ppmv and 4 ppmv respectively. Compliance with this condition shall be based on billing records or other data showing that the fuel gas is obtained from a natural gas utility company.

4. **Oxides of Nitrogen (NO_x) Concentration Emissions Limits** Emissions of NO_x (as NO_2) from the equipment subject to this permit shall not exceed a NO_x stack concentration of 30 ppmvd at 3% O_2 or a NO_x stack emission rate of 0.036 lb/MMBtu. Compliance with this condition shall be determined by source testing.

5. **Carbon Monoxide (CO) Concentration Emissions Limits**Emissions of CO from the equipment subject to this permit shall not exceed 400 ppmvd at 3% O_2 when fired on PUC quality natural gas. Compliance with this condition shall be determined by source testing.

6. **Fuel Usage Metering** The permittee shall install and operate a dedicated pressure-corrected fuel meter for the boiler subject to this permit. The permittee shall install and operate the fuel meter prior to initial boiler operations.[second sentence in ATC only]

7. **Source Compliance Demonstration Period** Once equipment installation is complete, all equipment permitted herein will be allowed to operate temporarily. During this SCDP the permittee shall:

   a. Notify the District in writing (Attn: Regulatory Compliance Division) of the initial equipment operation date. The notification shall be received by the District within one week of initial operation. The date of initial operation is the starting date of the SCDP;

   b. Begin recordkeeping (upon initiation of SCDP) as specified in Condition 10;

   c. Arrange for District inspection not more than thirty (30) calendar days (or other mutually agreed to time period)after the SCDP begins. A minimum of three calendar days advance notice shall be given to the District. This inspection is required to verify that the equipment and its operation are in compliance with District Rules and Permit Conditions;

   d. Submit a source test plan and conduct stack emission source testing within 90 days after the start of SCDP (or mutually acceptable date to the District); and,

   e. Submit a Permit to Operate (PTO) application and the appropriate filing fee not more than 120 calendar days after the SCDP begins.

   If a complete PTO application and source test report has not been received by the District within 150 calendar days after the start of the SCDP, the SCDP shall terminate and any equipment operation covered by this permit will be considered a violation of District Rules and Regulations. If the District has deemed the application complete, the SCDP will remain valid until the PTO has been issued. The District may extend the SCDP at its discretion or at the request , in writing (Attn: Regulatory Compliance Division), of the permittee[ATC permit only]

8. **Permit to Operate Application** The permittee shall obtain a Permit to Operate for the equipment covered under the Authority to Construct. A PTO application (APCD Form -01 with the appropriate filing fee) shall be submitted to the District following completion of the equipment inspection and prior to operation of the equipment beyond the Source Compliance Demonstration Period. [ATC permit only]

9. **Source Testing** The permittee shall conduct stack emissions testing of air emissions and process parameters listed in Table 2. The permittee shall submit a written source test plan to the District for approval. The source test plan shall be prepared consistent with the District's*Source Test Procedures Manual* (revised May 24, 1990). The permittee shall obtain written District approval of the source test plan prior to source testing. The District shall be notified at least ten (10) calendar days prior to the start of source testing to arrange for a mutually agreeable source test date when District personnel may observe the test.

   Source test results shall besubmitted to the District within forty-five (45) calendar days following the date of source test completion and shall be consistent with the requirements approved within the source test plan. All costs associated with the review and approval of all plans and reports and the witnessing of tests shall be recovered in accordance with Rule 210.

   Any District certified source test result which indicates the applicable Rule 342, or ATC emission limitations have been exceeded shall constitute a violation of Rule 342 and/or the ATC permit.

10. **Recordkeeping** The following records (electronic or hard copy) shall be maintained by the permittee and shall be made available to the District upon request:

    a. The volume (standard cubic feet) of natural gas consumed each month by the boiler;

b. Maintenance logs for the boiler, emission control system and fuel flow meter.

11. **Reporting Requirements** By March 1 of each year, a report detailing the previous calendar year's activities shall be provided to the District. The report shall list all the data required by Condition 10 (Recordkeeping) compiled on a monthly basis and summarized for the entire year.

12. **Equipment Operation** Operation under this permit shall be conducted in compliance with all data, specifications and assumptions included with the application (and supplements thereof) as documented in the District's project file and the attached District Engineering Evaluation under which this permit was issued.

13. **Compliance** Nothing contained within this permit shall be construed to allow the violation of any District, State of Federal rule, regulation, ambient air quality standard or air quality increment.

14. **Severability.** If any condition herein is determined to be invalid, all other conditions shall remain in force.

1.8 Enforcement

Permits are enforced by the Regulatory Compliance Division. APCD inspectors are responsible for conducting start-up inspections (also called the SCDP inspection), routine inspections (typically annual), review of annual reports and response to citizen odor complaints. The inspector will check to see if the source is complying permit conditions and applicable rules (e.g., Rule 302 - Visible Emissions). RCD P&P II.G(*Boilers*) details the inspection procedures that inspectors follow when inspecting a boiler, process heater and steam generator.

1.9 Fees

General: Permit fees are assessed to process, evaluate and ensure compliance for all permitted equipment. The fees (as of May 1997) for boilers, process heaters and steam generators are:

→ Application Filing Fee: $237.00 (Schedule F)

→ Permit Evaluation Fee: $309.68 per MMBtu per unit (Schedule A)
$41.64 - minimum fee per unit
$4,144.51 - maximum fee per unit

→ Source Test Fee: $1,058.06 per unit (Schedule C)

The application and evaluation fees apply to each permit issued (e.g., ATC, PTO). The PTO is valid for three years from the date of issuance. After three years, the permit is reevaluated by the APCD and a new permit evaluation fee is assessed. PTO evaluation fees include APCD inspection costs for the ensuing three years. In certain cases, permit evaluation fees may be assessed on a cost reimbursement (hourly) basis.

Example: One 27.500 MMBtu/hr boiler:

Application Filing Fee	=	$237.00 {submitted with application}
Permit Evaluation Fee	=	(27.500 MMBtu/hr)× ($309.68/MMBtu) = $8,516
	=	$4,144.51 - maximum fee applies {invoiced with permit}
Source Test Fee	=	$1,058.06 {invoiced prior to source test}

1.10 Toxics

This section is reserved for future use.

1.11 Permitting Notes

(a) Applicability. This permitting standard was written exclusively for diesel #2, natural gas and LPG fired fuels. Other fuels such as CO, landfill gas, digester gas or any other waste gas will need specific site data for permit analysis.

(b) Converting NOx and CO concentrations (ppmv at 3% O2) to lb/MMBtuA *shortcut* to converting NOx and CO concentrations is available by using the Rule 342 limits (NOx: 30 ppmvd at 3% O2, 0.036 lb/MMBtu; CO: 400 ppmvd at 3% O2, 0.297 lb/MMBtu) and taking the ratio of the new values.

$$\frac{ppmvd_{NOx}}{ppmvd_{NOx-Rule\ 342}} = \frac{lb\ /\ MMBtu_{NOx}}{lb\ /\ MMBtu_{NOx-Rule\ 342}}$$

Example: What is the equivalent "lb/MMBtu" for 25 ppmvd NOx at 3% O2?

Answer: $$lb\ /\ MMBtu_{NOx} = \frac{ppmvd_{NOx}}{ppmvd_{NOx-Rule\ 342}} \times lb\ /\ MMBtu_{NOx-Rule\ 342}$$

$$lb\ /\ MMBtu_{NOx} = \frac{25\ ppmvd}{30\ ppmvd} \times 0.036\ lb\ /\ MMBtu = 0.030\ lb\ /\ MMBtu$$

(c) Permitting for more than one fuel Certain combustion units may be equipped to operate on more that one fuel (i.e., separate oil and gas burners are installed). For these cases, emission calculations should be performed for each fuel separately as if it were the only fuel. Applicability thresholds will be based on the highest emissions from either fuel for the pollutant being reviewed. Separate emission limits for each fuel are established in the *Emission Limitation* permit condition. If 24 hr/day operations are assumed, no changes to the maximum daily heat input limits in the *Heat Input Limits* permit condition are needed. The maximum annual heat input limits do need to be revised to account the secondary fuel use to ensure that the maximum permitted heat release is enforceable. This is done by adding the term "D_{Btu}" to the annual limit of the primary fuel to subtract out the amount of heat input from the secondary fuel. The secondary fuel annual heat input limit would have a similar expression, except now the value to be subtracted is the heat input due to the primary fuel use. The revised permit condition would be:

1. **Heat Input Limits** The daily and annual heat input limits to the boiler shall not exceed the values listed below. These limits are based on the design rating of the boiler and the annual heat input value as listed in the permit application. Unless otherwise designated by the Control Officer, the following fuel heat content shall be used for determining compliance: PUC natural gas = 1,050 Btu/scf, Diesel Fuel #2 = 140,000 Btu/gal.

Eqmnt ID #	Fuel	Heat Input Limit (MMBtu)		
		Hourly	Daily	Annual
Boiler 1A	PUC Natural Gas	27.500	660.000	240,900 - D_{Btu}
Boiler 1A	Diesel Fuel #2	27.500	660.000	240,900 - NG_{Btu}

(a) D_{Btu} = the annual heat release from the combustion of diesel fuel #2
NG_{Btu} = the annual heat release from the combustion of PUC natural gas

(d) Diesel #2 as backup fuel Boilers often maintain diesel #2 as a backup fuel for times of natural gas curtailment. Pursuant to Section B.2 of Rule 342, a backup fuel may be used for up to a total of 192 hrs/yr (168 hrs of operation and 24 hrs of testing) without being subject to the emission standards of the rule. Emission calculations are based on maximum operation for short-term scenarios (hourly and daily) and 192 hrs/yr for long-term scenarios (quarterly and annual). Applicability thresholds are based on the highest emissions from either fuel for the pollutant being reviewed. Separate emission limits for each fuel are established in the *Emission Limitation* permit condition. If 24 hr/day operations are assumed, no changes to the maximum daily heat input limits in the *Heat Input Limits* permit condition are needed. The maximum annual heat input limits do need to be revised to account the backup fuel use to ensure that the maximum permitted heat release is enforceable. This is done by adding the term "D_{Btu}" to the annual limit as a value to be subtracted. The backup fuel annual heat input limit would be 192 times the rated hourly heat input. The revised permit condition would be:

1. **Heat Input Limits** The daily and annual heat input limits to the boiler shall not exceed the values listed below. These limits are based on the design rating of the boiler and the annual heat input value as listed in the permit application. Unless otherwise designated by the Control Officer, the following fuel heat content shall be used for determining compliance: PUC natural gas = 1,050 Btu/scf, Diesel Fuel #2 = 140,000 Btu/gal.

Eqmnt ID #	Fuel	Heat Input Limit (MMBtu)		
		Hourly	Daily	Annual
Boiler 1A	PUC Natural Gas	27.500	660.000	240,900 - D_{Btu}
Boiler 1A	Diesel Fuel #2	27.500	660.000	5,280

(a) D_{Btu} = the annual heat release from the combustion of diesel fuel #2
NG_{Btu} = the annual heat release from the combustion of PUC natural gas

(e) "Fuel Burning Equipment": To assess compliance with Rule 309 and to ensure that applicable rules and regulations are not circumvented, the applicant and permit engineer must determine if the project is composed of the minimum number of boilers, process heaters (etc.) whose simultaneous operations are required for the production of useful heat or power.

Example: Three 3.5 MMBtu/hr process heaters are designed to operate simultaneously to provide heat to Process "A". In this case, all three process heaters should be considered as a single "fuel burning equipment" (10.5 MMBtu/hr) for the purposes of permit and rule applicability. A permit would be required and Rule 342 requirements would apply.

1.12 References:

(a) United States Environmental Protection Agency. AP-42, Volume I, Fifth Edition. *Compilation of Air Pollutant Emission Factors, Volume I: Stationary Point and Area Sources.* Research Triangle Park, NC: GPO, January 1995.

(b) Perry, Robert H., and Chilton, Cecil H., eds. *Chemical Engineers' Handbook* Fifth Edition. New York: McGraw-Hill, 1973.

(c) United States Environmental Protection Agency. EPA 450/2-80-063, Revised Edition. *APTI Course 427, Combustion Evaluation: Student Manual*

(d) USEPA, STAPPA and ALAPCO. Emission Inventory Improvement Program, Volume II: Chapter 2. *Preferred and Alternative Methods for Estimating Air Emissions from Boilers* Research Triangle Park, NC: June 1996. (prepared by Radian Corporation).

(e) Santa Barbara County APCD. *Gaseous and Liquid Fuel SOx Emission Factor* Versions 1.0. January 31, 1997.

(f) Santa Barbara County APCD.*VOC/ROC Emission Factors and Reactivities for Common Source Types.* Version 1.0. April 2, 1997.

1.13 Document Revisions:

Version No.	Date	Reason for Revision	Initials
1.0	05/30/1997	Original issuance	mfg

1.14 Attachments

Attachment A - Example of Completed APCD Form -33

Attachment B - External Combustion Completeness Review Checklist

Attachment C - Summary of Applicable NSPS Requirements

h:\library\permit\ppm\boilers\boilers1.doc

Attachment "B" - External Combustion Completeness Review Checklist

#	Yes	No	Completeness Review Item
1	☐	☐	Filing Fee Submitted?
2	☐	☐	Has an APCD-01 Form (*General Permit Application Form*) been Submitted and filled in completely?
3	☐	☐	Notice of Certification Statement on APCD-01 Form signed?
4	☐	☐	Is the project located within 1000 feet of a school?
4a	☐	☐	*If Yes, then the requirements of H&SC Section 42301.6 are applicable and the APCD will perform a Health Risk Assessment (HRA). Has the applicant submitted information per Section 6 of Rule 204 (Applications: Information Required - HRA)*
5	☐	☐	Is this application for a new stationary source?
5a	☐	☐	*If no, does the application clearly identify what the "project" is?*
6	☐	☐	Are Site and Plot Plans (with dimensions) showing the location of the combustion unit submitted?
7	☐	☐	Has a general description of the business been provided?
8	☐	☐	Has a general description of the purpose of the combustion unit and its associated production and/or process lines been provided?
9	☐	☐	Is the APCD the Lead Agency?
9a	☐	☐	*If No, has the applicant submitted a copy of the Lead Agency permit or Notice of Determination.*
10	☐	☐	Are all fees/invoices current?
11	☐	☐	Have APCD-33 Forms (*External Combustion Equipment Summary Form*) been submitted for each combustion unit?
12	☐	☐	Are the APCD-33 Forms filled in completely?
13	☐	☐	Has manufacturer literature, catalogs or equivalent technical information been submitted for the combustion unit and/or the burners?
14	☐	☐	Has the applicant proposed non EPA AP-42/APCD Rule 342 emission factors?
14a	☐	☐	*If Yes, are copies of the supporting documentation for the proposed emission factors attached?*
15	☐	☐	Has the applicant proposed operating the combustion unit less than 24 hours per day at the rated capacity of the unit?
15a	☐	☐	*If Yes, has the applicant submitted a practically enforceable method for ensuring compliance with the daily emissions and heat input ratings?*
16	☐	☐	If a fuel Higher Heating Value (HHV) is proposed that is different then the default natural gas (1050 Btu/scf) and diesel #2 (140,000 Btu/gal) values, has the applicant provided fuel analyses to support the requested values?
17	☐	☐	If the combustion unit stack serves other equipment, is there an adequate place to position source test probes in accordance with the Source Test Protocol?
18	☐	☐	If emission controls are used, has the applicant submitted manufacturer literature, catalogs or equivalent technical information?
19	☐	☐	Is dedicated fuel use monitoring (pressure corrected for gaseous fuels) proposed for the combustion unit?
20	☐	☐	Have manufacturer literature, catalogs or equivalent technical information been submitted for the fuel meter and CEMS (if applicable)?
21	☐	☐	If the application is for an Outer Continental Shelf source, has a Notice of Intent been filed with the USEPA Region 9 office and has the applicant provided the APCD a copy of all EPA correspondence which notes that no revisions to Section 15 of the OCS Air Regulation are required?
22	☐	☐	If the Potential to Emit of the new source or the PTE of the "project" is greater than 25 pounds per day of any nonattainment pollutant, has the applicant proposed BACT and submitted an APCD Form-02 (*BACT Analysis Summary Form*).

#	Yes	No	Completeness Review Item
22a	☐	☐	*If Yes, has initial feedback from the EBT been sought on whether TF BACT should be investigated?*
22b	☐	☐	*If Yes and TF BACT will be investigated, has detailed input from the EBT been obtained {per Section 11.3(b) of Engineering P&P 6100.064.97}*
23	☐	☐	Does the new source or the "project" by itself exceed the NAR emission offset threshold?
23a	☐	☐	*If Yes, emission offsets are required (netting is not allowed). Has the applicant provided adequate information per Section E.5 of Rule 204 to identify the source of the ERCs?*
24	☐	☐	Does the new source or the "project" by itself exceed the NAR AQIA threshold?
24a	☐	☐	*If Yes, an AQIA is required (netting is not allowed). Has the applicant provided adequate information per Section E.4 of Rule 204 to perform an AQIA and has the APCD Modeling Group approved the information as complete?*
25	☐	☐	Is the applicant proposing to reduce the facility-wide NEI by creating an NEI Decrease ("D")?
25a	☐	☐	*If Yes, has sufficient information been submitted to ascertain the baseline actual emissions (does source test data correspond to historical three year heat input loads?)*
26	☐	☐	Has the applicant provided a correct facility-wide NEI calculation for the stationary source? (NEI = I for new sources; NEI = I + (P1 - P2) -D for existing sources)
26a	☐	☐	*If No, calculate the facility-wide stationary source NEI based on data in the IDS Database and information proposed in the application.*
27	☐	☐	Does the facility-wide NEI exceed the PSD BACT threshold for any attainment pollutant?
27a	☐	☐	*If Yes, and that pollutant has not also triggered the NAR BACT threshold due to its precursor relationship to a nonattainment pollutant (e.g., NOx and ROC for ozone, SOx, NOx, ROC for PM10), has the applicant proposed BACT and submitted an APCD Form-02 (BACT Analysis Summary Form).*
27b	☐	☐	*If Yes, has detailed input from the EBT been obtained {per Section 11.3(b) of Engineering P&P 6100.064.97}*
28	☐	☐	Does the facility-wide NEI exceed the NAR or PSD emission offset threshold?
28a	☐	☐	*If Yes, has the applicant provided adequate information per Section E.5 of Rule 204 to identify the source of the ERCs?*
29	☐	☐	Does the facility-wide NEI exceed the NAR AQIA or PSD AQIA Modeling thresholds?
29a	☐	☐	*If Yes, Has the applicant provided adequate information per Section E.4 of Rule 204 to perform an AQIA and Increment analysis and has the APCD Modeling Group approved the information as complete?*
30	☐	☐	Does the facility-wide NEI exceed the PSD AQIA Monitoring thresholds?
30a	☐	☐	*If Yes, has sufficient pre-construction monitoring data been provided to the APCD and has the APCD Modeling Group approved the information as complete?*
31	☐	☐	Does the facility-wide NEI exceed the PSD Class I Area review threshold?
31a	☐	☐	*If Yes, has sufficient pre-construction monitoring data been provided to the APCD and has the APCD Modeling Group approved the information as complete?*
32	☐	☐	Does the facility-wide NEI exceed the PSD Visibility, Soils and Vegetation Analysis threshold?
32a	☐	☐	*If Yes, has a Visibility, Soils and Vegetation Analysis been submitted?*
33	☐	☐	Will Rule 342 requirements be met based on the information submitted with the application?

Attachment "C" - Summary of Applicable New Source Performance Standards for Fossil Fuel Fired Boilers[a1]

Standard/ Boiler Types/ Applicability Criteria	Boiler Size MMBtu/hr	Fuel or Boiler Type	PM lb/MMBtu [% Reduction]	SO_2 lb/MMBtu [% Reduction]	NO_x lb/MMBtu [% Reduction]
SUBPART D	>250	Gas	0.10	NA	0.20
Industrial-Utility		Oil	0.10	0.80	0.30
Commence construction after 8/17/71		Bit./Subbit. Coal	0.10	1.20	0.70
SUBPART Da	>250	Gas	0.03 [NA]	0.80 [90]	0.20 [25]
Utility		Oil	0.03 [70]	0.80 [90]	0.30 [30]
Commence construction after 9/18/78		Bit./Subbit. Coal	0.03 [99]	1.20 [90]	0.60/0.50 [65/65]
SUBPART Db	>100	Gas	NA	NA	0.10
Industrial-Commercial Institutional		Distillate Oil	0.10	0.80 [90]	0.10
Commence construction after 6/19/84		Residual Oil	(same as for distillate oil)	(same as for distillate oil)	0.30
		Pulverized Bit./Subbit. Coal	0.05	1.20 [90]	0.70
		Spreader Stoker & FBC	0.05	1.20 [90]	0.60
		Mass-Feed Stoker	0.05	1.20 [90]	0.50
SUBPART Dc	10-100	Gas	--	--	--
Small Industrial Commercial-Institutional		Oil	--	0.50	--
Commence construction after 6/9/89		Bit./Subbit. Coal	0.05	1.20 [90]	--

NOTES:

a1. Information for this table was taken from USEPA AP-42, Table 1.3-10 (New Source Performance Standards for Fossil Fired Boilers), Fifth Edition, January 1995. See current NSPS regulations at 40 CFR 60 for exact details.

a. Zero percent reduction when emissions are less than 0.20 lb/MMBtu. FBC = fluidized bed combustion. NA = not applicable.

b. 70 percent reduction when emissions are less than 0.60 lb/MMBtu.

c. The first number applies to bituminous coal and the second to sub-bituminous coal.

d. Standard applies when gas is fired in combination with coal; see 40 CFR 60, Subpart Db.

e. Standard is adjusted for fuel combinations and capacity factor limits; see 40 CFR 60, Subpart Db.

f. For furnace heat release rates greater than 70,000 Btu/hr-ft^3 the standard is 0.20 lb/MMBtu.

g. For furnace heat release rates greater than 70,000 Btu/hr-ft^3, the standard is 0.40 lb/MMBtu.

h. Standard applies when gas or oil is fired in combination with coal; see 40 CFR 60, Subpart Dc.

i. n/a

j. 20 percent capacity limit applies for heat input capacities of 30 MMBtu/hr or greater.

k. Standard is adjusted for fuel combinations and capacity factor limits; see 40 CFR 60, Subpart Dc.

m. Additional requirements apply to facilities which commenced construction, modification, or reconstruction after 6/19/84 but on or before 6/19/86 (see 40 Code of Federal Regulations Part 60, Subpart Db).

n. 0.50 lb/million Btu limit (but no percent reduction requirement) applies if facilities combust only very low sulfur oil (< 0.5 wt. % sulfur).

APPENDIX I

Boilers

Santa Barbara County
Air Pollution Control District

SOx
Emission Factors for
Gaseous Fuels
and
Liquid Fuels

1997

Gaseous Fuel SO_x Emission Factor:

Applicability: External Combustion units such as boilers and process heaters for gaseous fuels (e.g., natural gas, oil field produced gas and propane).

Equations: Two equations are presented. The first is the fundamental equation showing how the emission factor is generated. The second is a reduced form of the basic equation for streamlined use. Finally, a check on the units is shown.

$$EF = [ppmvd\ \mathrm{S}] \times \left[\frac{1}{HHV}\right] \times \left[\frac{1}{mol\ vol}\right] \times [mol\ ratio] \times [MW_{SO_2}]$$

$$EF = [0.169] \times \left[\frac{ppmvd\ \mathrm{S}}{HHV}\right]$$

$$\frac{lb}{MMBtu} = \left[\frac{ft^3\ \mathrm{S}}{MM\,ft^3\ \mathrm{Fuel}}\right] \times \left[\frac{ft^3\ \mathrm{Fuel}}{Btu}\right] \times \left[\frac{lb-mole\ \mathrm{S}}{379\,ft^3\ \mathrm{S}}\right] \times \left[\frac{lb-mole\ \mathrm{SO_2}}{lb-mole\ \mathrm{S}}\right] \times \left[\frac{64\ lb\ \mathrm{SO_2}}{lb-mole\ \mathrm{SO_2}}\right]$$

where:

EF	=	SO_x emission factor in units of lb/MMBtu (HHV based, as SO_2)
ppmvd S	=	total sulfur concentration in fuel (as S)
HHV	=	higher heating value of the fuel (Btu/scf)
mol vol	=	molar volume of the fuel at standard conditions (1 atm & 60 °F, equals 379 std ft^3/lb-mole)
mol ratio	=	stoichiometric molar ratio for the combustion of sulfur (1 S + 1 $O_2 \Rightarrow$ 1 SO_2)
MM	=	million

Defaults: Default emission factors can be arrived at by using standard default values for the heating value and sulfur concentrations for each fuel.

Fuel	ppmvd (as S)	ppmvd (as H_2S)	HHV (Btu/scf)	SO_x Emission Factor (lb/MMBtu)
PUC Natural Gas	85	80	1,050	0.0137
GPA Commercial Propane	254	239	2,522	0.0170
GPA HD-5 Propane	169	159	2,522	0.0113
Produced Gas - South Zone	254	239	1,050	0.0409
Produced Gas - North Zone	846	796	1,050	0.1362

where:

(a) PUC Natural Gas: Sulfur concentration based on maximum allowed total sulfur content of 5 gr/100 scf (as S) per General Order 58-A. The calculations below show how the equivalent concentrations are derived (depending on the "basis"):

{ppmvd as S = (5 gr S/100 scf)*(10^6 scf fuel/MM scf fuel)*(lb S/7000 gr S)*(379 scf S/lb-mole S)/(32 lb S/lb-mole S) = 85 ppmvd as S}

{ppmvd as H_2S = (5 gr H_2S/100 scf)*(10^6 scf fuel/MM scf fuel)*(lb H_2S/7000 gr H_2S)*(379 scf H_2S/lb-mole H_2S)/(34 lb H_2S/lb-mole H_2S) = 80 ppmvd as H_2S}.

Heating value based on USEPA AP-42, Appendix A (*Thermal Equivalents of Various Fuels*).

(b) Propane: Sulfur concentration based on Gas Processors Association Engineering Data Book (Ninth Edition, 1972), Figure 15-50 (GPA Liquefied Petroleum Gas Specifications, rev. 1979), Commercial Propane = 15 gr/100 scf, HD-5 Propane = 10 gr/100 scf (both as S). Same equation as listed in (a) above for the ppmvd "as S" calculation. Heating value based on Perry's Chemical Engineers Handbook, Chapter 9, 5th Edition, Table 9-16.

(c) Produced Gas: Sulfur concentration based on APCD Rule 311 - Southern Zone limit of 15 gr/100 scf (as H_2S) and Northern Zone limit of 50 gr/100 scf (as H_2S). To use in the calculations (which are based on an "as S" basis), these limits are adjusted to an as sulfur (as S) basis by use of the equation in note (a) above. This has the same affect as taking the ratio of the molecular weights (MW_S/MW_{H2S}) such that the respective Zone limits are 14.12 gr/100 scf and 47.06 gr/100 scf (as S). Heating value based on USEPA AP-42, Appendix A (*Thermal Equivalents of Various Fuels*).

(d) Reporting References: Reporting "as H_2S" means the total sulfur values are converted to an H_2S basis by taking the ratio of the molecular weights (MW_S/MW_{H2S}). This is needed to determine compliance with Rule 311 and permit conditions that require reporting "as H_2S". For PUC and GPA standards and the emission calculations, sulfur content "as S" is used. "S" in this case is mono-atomic sulfur (MW = 32 lb/lb-mole). When reviewing fuel analyses with di-atomic sulfur species, such as CS_2, the amount of sulfur from the compound in question must be doubled to account for the extra mole of sulfur.

(e) Permit Condition Limits and Reporting: Since permits require sulfur content of fuels to be reported "as H_2S", the associated limits for non-Rule 311 sulfur concentrations need to be also stated in an "as H_2S" basis so as to minimize the confusion of reporting in two ways. As such, for PUC natural gas the standard of 85 ppmvd "as S" is listed in the permit condition as 80 ppmv "as H_2S". For GPA propane/LPG, the standard of 254 ppmvd "as S" is listed in the permit condition as 239 ppmvd "as H_2S".

h:\library\protocol\sulfur01.doc

Liquid Fuel SO_x Emission Factor:

Applicability: External Combustion units such as boilers and process heaters for liquid fuels (e.g., diesel fuel #2).

Equations: Two equations are presented. The first is the fundamental equation showing how the emission factor is generated. The second is a reduced form of the basic equation for streamlined use. Finally, a check on the units is shown.

$$EF = [wt.\%\ S] \times [density] \times \left[\frac{1}{MW_S}\right] \times [mol\ ratio] \times [MW_{SO_2}] \times \left[\frac{1}{HHV}\right] \times \left[\frac{10^6}{MM}\right]$$

$$EF = [20{,}000] \times \left[\frac{wt.\%\ S}{HHV}\right] \times [density]$$

$$\frac{lb}{MMBtu} = \left[\frac{lb\ S}{100\ lb\ Fuel}\right] \times \left[\frac{lb\ Fuel}{gal\ Fuel}\right] \times \left[\frac{lb-mole\ S}{lb\ S}\right] \times \left[\frac{lb-mole\ SO_2}{lb-mole\ S}\right] \times \left[\frac{64\ lb\ SO_2}{lb-mole\ SO_2}\right] \times \left[\frac{gal\ Fuel}{Btu}\right] \times \left[\frac{10^6}{MM}\right]$$

where:

EF	=	SO_x emission factor in units of lb/MMBtu (HHV based, as SO_2)
wt.% S	=	weight percent total sulfur in fuel (as %S)
density	=	density of fuel (lb/gal)
MW	=	molecular weight (lb/lb-mole)
mol ratio	=	stoichiometric molar ratio for the combustion of sulfur ($1\ S + 1\ O_2 \Rightarrow 1\ SO_2$)
HHV	=	higher heating value of the fuel (Btu/gal)
MM	=	million

Defaults: Default emission factors can be arrived at by using standard default values for the sulfur weight percentage, density and heating value for each fuel.

Fuel	wt.% S	Density (lb/gal)	HHV (Btu/gal)	SO_x Emission Factor (lb/MMBtu)
Diesel Fuel #2 (Clean Diesel)	0.05	7.050	140,000	0.0504
Diesel Fuel #2 (Rule 311)	0.50	7.050	140,000	0.5036
Gasoline	0.03	6.170	130,000	0.0285

where:

(a) Diesel Fuel #2: Sulfur weight percent based on State specification (*Clean Diesel per CCR, Title 13, Section 2281*). Heating value based on USEPA AP-42 Emission Factor Background Document (Chapter 1.3) and density based on USEPA AP-42, Appendix A (*Weights of Selected Substances*).

(b) Gasoline: Sulfur weight percentage based per State specification (*CCR, Title 13, Section 2252*). Heating value and density based on USEPA AP-42, Appendix A (*Weights of Selected Substances*).

h:\library\protocol\sulfur02.doc

References

1. Babcock & Wilcox Company, Stultz, S.C. and Kitto, J.B. Editors. 1992. Steam, Its Generation and Use. 40th Edition. Barberton, Ohio. Babcock and Wilcox.

2. Reed, Robert D., 1976. Furnace Operations. Second Edition. Houston, Texas: Gulf Publishing Company.

3. Jahnke, James A. 1992. APTI Course 474, Continuous Emissions Monitoring Systems. Chapel Hill, North Carolina. Environmental Protection Agency.

4. Environmental Protection Agency. 1980. APTI Course 427, Combustion Evaluation. EPA 450/2-80-063.

5. Beachler, David S. 1984. APTI Course 428A, Introduction to Boiler Operation. Chapel Hill, North Carolina. Environmental Protection Agency.

6. Environmental Protection Agency. 1994. Alternative Control Techniques Document -- NOx Emissions from Utility Boilers. EPA 453/R-94-023.

7. Environmental Protection Agency. 1993. Alternative Control Techniques Document -- NOx Emissions from Process Heaters. EPA 453/R-93-015.

8. California Air Resources Board. 1992. Sources and Control of Oxides of Nitrogen Emissions. Sacramento, California. CARB

9. California Air Resources Board. 1980. Suggested Control Measure for the Control of emissions of Oxides of Nitrogen from Industrial, Institutional, and Commercial Boilers, Steam Generators and Process Heaters. Sacramento, California. CARB.

10. California Air Resources Board. 1991. Air Pollution Control at Resource Recovery Facilities. Sacramento, California. CARB

11. Gas Processors Suppliers Association. 1994. Engineering Data Book. Tenth Edition. Tulsa, Oklahoma. GPSA

INDEX

A

air preheater 200 - 17
ammonia slip 300 - 20
anhydrous ammonia 300 - 21
annubar 400 - 18
aqueous ammonia 300 - 21
ARB Method 5 500 - 12

B

BACT 300 - 11
biomass 600 - 8
boiler load 300 - 23
burner 200 - 17

C

calibration gases 400 - 6
California Air Resources Board 100 - 1
California Environmental Protection Agency 100 - 1
carrier gas 400 - 4
CEM certification 400 - 33
chemiluminescence 400 - 12
close-coupled 400 - 5
combustion contaminants 500 - 11
Compliance Assistance Program 100-- 1
compliance status 600 - 1
conduction 200 - 4
confidential data 600 - 8
continuous emission monitors (CEMs) 500 - 14
convection 200 - 4
convection section 200 - 8, 200 - 30
corona discharge 300 - 43
cross-stack 400 - 2
crude oil-fired 300 - 15

D

damper 200 - 32
dilution gas 400 - 4
distillate oil 200 - 39
downcomers 200 - 9
droplet size 300 - 36
dry basis 400 - 9
duct burner 300 - 19

E

electrocatalysis 400 - 14
emergency breakdown 500 - 2
EQUIPMENT BREAKDOWN PROVISIONS 500 - 20
excess air 200 - 14
extractive monitor 400 - 3

F

firebox 200 - 8
flame 600 - 14
flue gas recirculation 300 - 7
fluidized bed 200 - 30
forced draft 200 - 32
fuel NOx 300 - 3
fuel staging 300 - 11
furnace 200 - 8

G

gas analysis 200 - 34
gas velocity 300 - 43

H

higher heating value 200 - 34

I

in-stack 400 - 1
induced draft 200 - 15, 200 - 32

L

Levels of Inspection 600 - 3
loading and unloading catalyst 300 - 44
low excess air 300 - 6
low-NOx burner 600 - 14
low-sulfur fuel oil 500 - 8
lower heating value 200 - 34

M

modification 500 - 3
mud drum 200 - 9

N

natural draft 200 - 15, 200 - 32
natural gas 200 - 13

INDEX

NSPS for NOx 500 - 3

O

oil droplet size 300 - 36
oil field 300 - 15
oil gun 200 - 21

P

particulate loading 300 - 43
performance audit 400 - 25
Permit to Operate 500 - 2
PH 600 - 21
pitot tube 400 - 17
polarography 400 - 15
pollutants 200 - 30
pre-mix burner 200 - 17, 300 - 9, 600 - 14
precipitator collection efficiency 300 - 42
Pressure Drop 600 - 19
probe 400 - 6
products of combustion 200 - 29

R

radiant section 200 - 8
radiation 200 - 2
response time 400 - 2
Ringelmann Chart 500 - 10

S

sample dilution 400 - 4
saturated steam 200 - 11
selective catalytic reduction (SCR) 300 - 17, 600 - 15
selective non-catalytic reduction (SNCR) 300 - 21, 600 - 16
slurry 300 - 31
soot blowing 200 - 11
span gas 400 - 22
spark rate 300 - 43
steam drum 200 - 9
superheated steam 200 - 11
systems audit 400 - 25

T

thermal NOx 300 - 3

U

umbilical cord 400 - 7
urea 300 - 21, 300 - 23
UV florescence 400 - 12

V

variance 500 - 2
VISIBLE EMISSIONS 500 - 3

W

Wet Slurry Throwaway Scrubbing 300 - 33
wind box 200 - 15

Z

zero gas 400 - 22