CHAPTER 5

THREE AUTOMATED SYSTEMS FOR THE COLLECTION OF CLOUDWATER

Introduction

In order to initiate an automated cloudwater sampling program in the Sierra Nevada of California, specialized sampling equipment had to be developed. Cloudwater samples collected during the study discussed in this report were obtained using three different collection systems. Each system utilized a different cloudwater collector. The three collection systems, and their corresponding cloudwater collectors, are described in this chapter.

Equipment

Integrated Cloudwater Monitoring System

The integrated cloudwater monitoring system was used during the spring, summer, and fall to collect samples of cloudwater in Sequoia and Yosemite National Parks (see Chapter 2). The system is composed of three primary pieces of equipment: a cloudwater collector to collect samples, an autosampler to fractionate and store the collected samples, and a cloudwater sensor to monitor for the presence of impacting clouds and control operation of the collector.

The Caltech Active Strand Cloudwater Collector (CASCC), pictured in Figure 1, serves as the cloudwater collector for this sampling system. The CASCC (Daube et al., 1987a) has been in use at Caltech since the summer of 1985. It is an improved version of collectors described in detail elsewhere (Jacob et al., 1985; Daube et al., 1987b). The CASCC employs a 14 volt DC fan to draw air across a bank of six angled rows of 508 μm Teflon strands at a velocity of 8.5 $m \cdot s^{-1}$. Cloudwater droplets in the air parcel (typically 2 to 50 μm diameter) are collected

on the strands by inertial impaction. These droplets coalesce with previously collected droplets and flow down the strands, aided by gravity and aerodynamic drag, into a Teflon sample trough located beneath the bank of strands. A Teflon sample tube connected to the trough directs the sample to the autosampler.

One of the primary reasons for developing the CASCC was to enable automated sample collection. Prior to the summer of 1985, cloud and fogwater samples collected in Caltech projects were obtained using a Rotating Arm Collector (RAC). The RAC, described in detail elsewhere (Jacob et al., 1984), collects samples by impaction in slots milled in the leading edges of a Teflon–coated stainless steel rod. The rod is rotated at 1700 rpm. The sample is accelerated outward to two 30 ml sample bottles, one located at each end of the rod. The difficulty of automatically changing sample bottles on a rotating arm prohibits the incorporation of the RAC into an automated collection system. The CASCC, which delivers sample to a fixed point, is more easily adapted for this purpose. A side–by–side sampling comparison of the RAC and the CASCC is discussed elsewhere (Collett et al., 1989).

The collection efficiency of the CASCC, η, is a product of the collection efficiency of each strand, η_1, and the percentage of total flow through the collector sampled by the strands, η_2.

$$\eta = \eta_1 \cdot \eta_2 \tag{1}$$

The efficiency of collection by impaction on a single cylinder, η_1, is well characterized in the literature (e.g. Bird, Stewart, and Lightfoot, 1960; Friedlander, 1977). The percentage of air sampled by the strands, η_2, is a function of the strand

geometry and can be approximated using

$$\eta_2 = \{1-(1-DL^{-1})^n\} \tag{2}$$

where,

D = strand diameter, m

L = spacing between strands, m

n = number of rows of strands

For the CASCC, with six rows of 508 μm strands spaced 1.8 mm apart, 86% of the air passing through the collector is sampled. Figure 2 depicts the overall collection efficiency of the CASCC, η, as a function of droplet size. Values of η_1 are taken from Friedlander (1977). The collection efficiency asymptotically approaches 0.86 at large droplet sizes and drops sharply for droplets with diameters less than about 6 μm. The 50% collection efficiency size–cut corresponds to a droplet diameter of approximately 3.5 μm. Figure 2 indicates that most of the droplets in the activated size region (droplet diameter > 1 μm) are collected efficiently while non–activated sub–micron aerosol particles are not.

The automated CASCC used in this study was equipped with several additional features depicted in Figure 3. First, a special inlet was mounted on the front of the collector to exclude the sampling of rain drops. The opening of this inlet faces downward. Trajectory analysis indicates that droplets with diameters larger than 300 μm are excluded under most conditions encountered, which enables the CASCC to operate under conditions where cloud and rain are present at the sampling site simultaneously. Second, automatic covers were added to the inlet and the rear of the collector. These covers help to prevent the accumulation of dry

deposition inside the collector between sampling periods. The covers are opened pneumatically when sampling begins. Last, the CASCC was equipped with an automatic rinsing system. Distilled, de–ionized water is pumped from a 15 liter reservoir through a polypropylene nozzle (Bete, type WL) mounted inside the sampler inlet. Spray from the nozzle is directed onto the Teflon collection strands in the CASCC. A rinsing cycle is initiated at the beginning and end of each sampling period to ensure the cleanliness of the Teflon collection surfaces. The CASCC is mounted on top of a 3 m anodized aluminum stand.

The automated fractionating sampler, pictured in Figure 4, was developed to fractionate and store samples collected by the CASCC. In this study, samples were fractionated by volume. The main features of the sampler are (1) a carousel containing 20 sample bottles, (2) a rinsewater diversion valve, (3) a sample reservoir which holds each sample until it is dumped into a sample bottle, (4) a refrigerator which houses the carousel and reservoir to help preserve the chemical integrity of the samples, (5) the electronic circuitry which controls the operation of the autosampler, and (6) a printer which records pertinent data about the collection process.

The rinsewater diversion valve, mounted above the sample entrance to the autosampler, is used to control the flow of sample into the sampler reservoir. During periods when the CASCC is being rinsed, this valve diverts the rinsewater away from the autosampler. Sample collected by the CASCC, during the first 20 minutes of each event, also is diverted to ensure that all rinsewater has been washed from the strands by cloudwater. After 20 minutes, the valve is switched to allow sample to flow into the reservoir. Sample is collected in the reservoir assembly, pictured in Figure 4, until it is released to a sample bottle. The sample is released

either when the level of sample in the connected side tube reaches the level of the optical liquid level sensor or when the collector is turned off and then back on (signifying a new event). The position of the liquid level sensor can be adjusted so that the volume of sample collected before release to a sample bottle varies from 60 to 500 ml. Any amount in excess of 60 ml is discarded before releasing the sample to a 60 ml bottle.

Up to twenty consecutive samples can be collected by the autosampler. The carousel, holding twenty 60 ml sample bottles, rotates to bring each consecutive bottle beneath the reservoir as needed. A counter is used to keep track of the number of bottles used. When the last bottle is used, power to the liquid level sensor is turned off and any subsequently collected sample accumulates in the reservoir. Filled sample bottles remain in the refrigerated environment (4 °C) until they are picked up by a site operator.

An eight channel printer (Hecon model A0544) is used to record the time and sequence of events in the collection process. Four channels are used to record the status of the cloudwater sensor (described in the following section), the rinse pump, the rinsewater diversion valve, and the liquid level sensor. Whenever a channel changes status, the time and the new channel state (high or low) is recorded. Power failure and restoration also are recorded by the printer. A battery provides backup power to the printer's internal clock in the event of power failure.

Automated collection of cloudwater requires the use of a cloudwater sensor to determine when clouds are present at the site in order that sampling may be initiated. The sensor used in this collection system is pictured in Figure 5. Operating parameters of the sensor are listed in Table 2. Like the CASCC, the

sensor relies on a fan to draw air through a rain–excluding inlet and across an angled bank of strands. When cloudwater droplets are present in the air parcel, they are collected by inertial impaction upon the strands. Collected droplets coalesce and run down the strands where they drip onto a sensing grid pictured in Figure 6. When water bridges the gap between the upper grid and the plate (see Figure 6), a circuit is completed, and the CASCC is activated. A heater is mounted under the grid to aid in evaporating the collected water. When water ceases to drip onto the grid, the heater dries it. If the grid remains dry for 20 minutes, the cloudwater impaction event is deemed over, and the CASCC is turned off.

The cloudwater sensor is mounted on a 3 m anodized aluminum stand. A pivot is located at the top of the stand, and a wind vane keeps the sensor pointed into the wind to maximize the efficiency of cloudwater collection. A six channel slip–ring carries the electrical signals through the rotating joint.

The use of the CASCC, the cloudwater sensor, and the autosampler together constitutes an integrated cloudwater sampling system. As indicated above, the sensor serves to turn the system on and off, the CASCC collects the cloudwater, and the autosampler fractionates the samples and maintains them in a refrigerated environment. Operation of the system is outlined schematically in Figure 7.

Winter Cloudwater Sampling System

Since the cloudwater monitoring program was designed to sample throughout the year in the central and southern Sierra Nevada of California, the cloudwater collection system was required to function in freezing conditions. Both the

cloudwater sensor described above and the CASCC are not operational in such an environment. Supercooled cloudwater droplets impacting on the strands freeze almost immediately when temperatures are at or below freezing. The frozen droplets, or rime, clog both the collector and the sensor, preventing the collection of any samples. A new cloudwater collector and a new sensor were designed and built to cope with this problem.

The collector, referred to as the Caltech Heated Rod Cloudwater Collector (CHRCC), is similar in design to the CASCC (see Figure 8 and Table 3). Several important differences, however, distinguish the two instruments. First, the CHRCC is a much smaller collector than the CASCC. Second, the amount of air sampled by the CHRCC in a given amount of time is approximately 25% that sampled by the CASCC. Last, the CHRCC has a different collection surface. While the CASCC uses six rows of 0.51 mm Teflon strands, the CHRCC utilizes six rows of 3.18 mm stainless steel (passivated, type 304) rods. The collection efficiency of both instruments is similar for all droplet diameters greater than about 15 μm; however, the CHRCC is less efficient at collecting smaller droplets, due to the larger diameter of the collection cylinders (see Figure 9). The 50% collection efficiency size–cut for the CHRCC corresponds to a droplet diameter of approximately 7.5 μm.

The stainless steel rods in the CHRCC are hollow. A nichrome wire, encased in a Teflon sleeve, is threaded through the rods. When current is passed through the wire, heat is dissipated and the rods are warmed. The Teflon sleeve serves to electrically insulate the wire from the stainless steel rods. Heat can be dissipated through the rods at rates up to 285 W, utilizing a 117 VAC power source. Originally it was hoped that the collector could be operated continuously with a temperature feedback control system, maintaining the temperature of the rods

slightly above freezing. Mass transfer calculations, however, indicated that small droplets ($\leq$ 50 μm) would evaporate almost completely under typical conditions ($T_{rod} \simeq 4$ °C, $T_{amb} \simeq -1$ °C) within a few seconds. For this reason, a cyclical mode of operation was adopted for the CHRCC during cold sampling periods. In this mode, a 15 minute period of collection is followed by a 1 minute heating cycle. During the heating portion of the cycle, the fan on the collector is turned off, and the covers on the collector are closed to help reduce evaporation by eliminating forced convection. More importantly, the 15 minute collection period is intended to allow coalescence of the collected drops to decrease the surface to volume ratio of the collected sample, thereby greatly reducing rates of evaporation. Assuming a typical collection rate of 0.5 $ml \cdot min^{-1}$ for the 15 minute collection period, calculations of free convection mass transfer of sample from the rods to the air indicate that evaporation should be less than 1%. Concentrations of natural background ions (e.g. Ca^{2+} and K^{+}) in cloudwater collected using the CHRCC were comparable to those found in CASCC samples collected at other times of the year (see Chapter 2), further suggesting that evaporation was not a serious problem under conditions encountered during this study.

Sample melted off the rods during the heating cycle flows down into a Teflon sample trough, through a heated Teflon tube, and into a sample bottle. Only bulk cloudwater samples are collected using the winter collection system. Samples are not refrigerated because the system is used when ambient temperatures are low. Since the system is not equipped with an automated rinsing system to rinse before and after each event, attendance by a site operator is required on an event basis. Both the CHRCC, and the cloudwater sensor described below, are mounted on a 3 m anodized aluminum stand. The CHRCC is mounted on top of the stand, while the sensor is mounted approximately 0.5 m below the top.

The new sensor designed for the winter collection system (see Figure 10) relies on an optical system to detect the presence of clouds. An LED light source (Skan–a–Matic, model L43004) emits light with a wavelength of 940 nm. Emitted light, scattered back toward the source by any target, is measured by a photodetector (Skan–a–Matic, model P43004), with peak response at 910 nm. Light emitted from the LED is modulated at 1 kHz. Only light of the proper wavelength and modulation is measured by the photodetector, which helps to exclude interference from ambient light. Regular checks of the background reading are performed automatically to further reduce interference. Both the light source and the photodetector are housed in sight tubes, in an anodized aluminum housing, which fix their alignment at five degrees with respect to each other, resulting in a beam intersection distance of 0.75 m. The sight tubes are heated to prevent accumulation of ice. Air is pumped through the tubes at a rate of 1 $l \cdot min^{-1}$, reducing the collection of dust in the sight tubes and discouraging habitation by insects. The housing also contains the control module for the sensor.

In the presence of clouds, a significant degree of backscattering is observed by the photodetector, generating an increase in the photodetector output signal. When the signal exceeds a pre–determined level for ten minutes, the collector is activated. Figure 11 shows a typical set of output data from the backscattering sensor during a period without cloud interception. There is some variation of the signal as a function of the time of day. Four periods of cloud interception are signified in Figure 12 by large spikes (up to 250 mV) in the output of the photodetector. A threshold value of 50 mV is used to activate the collector.

Data–logging and system control for the winter collection system is

performed by a Campbell CR10 controller. This unit processes and records information from the backscattering sensor, a thermistor temperature probe, a barometer, an anemometer and wind direction sensor, and the CHRCC. Half–hour averages of all parameters are recorded during normal operation. When clouds are intercepting the site, minimum and maximum backscattering levels, along with the running average and standard deviation of the backscattering level, are recorded every five minutes. The CR10 interprets the signal from the backscattering sensor and determines when the collector should be activated. The CR10 also is programmed to monitor the ambient temperature and to activate the heating cycle in the collector when warranted ($T_{ambient} \leq 4.5$ °C).

Passive Cloudwater Monitoring System

Several of the cloudwater monitoring sites selected in the Sierra were located a considerable distance away from any source of electric power. Power requirements at the site therefore had to be limited to what could be supplied by batteries carried in to the sites once per month. This necessitated the development of a cloudwater collector which could collect droplets efficiently by utilizing the ambient winds. The cylindrical collector, depicted in Figure 13, is comprised of two concentric rows of 508 μm strands, making its collection efficiency independent of wind direction. The device collects most cloud droplets efficiently when the wind speed exceeds 2 miles per hour (see Figure 14). The collector is mounted on a 3 m anodized aluminum stand designed to withstand wind speeds exceeding 100 miles per hour. An anemometer (WeatherMeasure #2612) is mounted at the same height as the collector on an arm extending 0.66 m out from the stand. A rain gauge (WeatherMeasure #6011–A) is located on the ground a few meters away from the base of the stand.

Collected cloudwater is gravity fed through a Teflon tube into a tipping cup counter where its volume is measured in 8.7 ml increments. The counter is housed in a waterproof enclosure attached to the collector stand. A data collection system also is housed in this enclosure. Data is recorded from the counter mentioned above, a tipping cup rain gauge, and an anemometer. The data is stored on a Tandy 102 portable computer. The digital circuitry required to interface the computer to these three instruments was designed specifically for this project. Power consumed by the data–logging system is minimized by supplying power to the computer only during periods of cloud impaction or rainfall.

The key objective in software design for the system was compact data storage, since only 22 kbytes of memory were available. Most data from the tipping cups are stored as a two byte representation indicating the time and which cup tipped. Only two bytes are required per data point, since the time at which the tip occurs is recorded as elapsed time from the start of an event, rather than as real time. During periods of rainfall or cloud impaction, 5 minute average wind speeds are measured and recorded, also as a two byte representation. Compacting the stored information in this way allows a record of over 100 inches of rain and an equivalent amount of impacted cloudwater to be compiled before the available memory is filled.

The design of the passive cloudwater collector allows rain as well as cloudwater to be collected. Determining which data points represent rainfall and which represent cloudwater impaction would be impossible without the simultaneous collection of data from the rain gauge. Figure 15 presents data describing the relative efficiency of rain collection by these two instruments as a

function of ambient wind speed. Figure 16 depicts the same collection efficiency data as a function of rainfall intensity. This data was collected in a side–by–side comparison of the two instruments during a number of rain storms occurring in Pasadena in early 1988. At low wind speeds (< 4 miles per hour), the rain gauge collected rainfall more efficiently than the cloudwater collector. This was expected since the cross–sectional area of the rain gauge is nearly 60% greater than the cross–sectional area of the passive cloudwater collector. At moderate wind speeds (4 – 8 miles per hour), however, impaction of droplets with a horizontal component to their motion, on the strands of the cloudwater collector, became more important, and the two instruments exhibited comparable collection efficiencies. At higher wind speeds than were observed in this intercomparison (above 15 miles per hour), droplets are likely to begin to blow off the strands of the cloudwater collector, resulting in a decrease in the collector's rainfall collection efficiency.

Conclusions

Three separate automated cloudwater collection systems were developed for use in a study of cloud interception frequency and cloudwater chemistry in the Sierra Nevada of California. The first system utilized an active cloudwater collector, a sample–fractionating autosampler to divide and store the collected samples, and a cloudwater sensor to activate and deactivate the system. The cloudwater collector was equipped with automatic covers and an automatic rinsing system. This system was used to collect cloudwater samples, on a sub–event basis, during the spring, summer, and fall periods of the study. Collected samples were analyzed to determine their chemical composition.

The second system, also utilizing an active cloudwater collector, was used to

collect Sierra cloudwater samples during the winter sampling period. The collector used in this system incorporated a heating system, enabling frozen cloudwater (rime ice) to be melted and drained off of the collection surfaces during freezing conditions. An optical cloudwater sensor was used to detect the presence of clouds. Collected cloudwater was stored as a single bulk sample, which was chemically analyzed to determine the concentration levels of major ions.

Samples collected by the first two systems provided information about spatial and temporal variations in the chemical composition of Sierra cloudwater. The third system, utilizing a passive cloudwater collector in order to minimize power requirements, recorded the volume of cloudwater collected as a function of time. Collected cloudwater was not chemically analyzed. The system also incorporated a rain gauge, and recorded precipitation as a function of time. This system was used to collect information on spatial and temporal variations in precipitation and cloud interception in the Sierra.

References

Bird, R. B., Stewart, W. E. and Lightfoot, E. N. (1960) *Transport Phenomena.* John Wiley and Sons, New York, 780 p.

Collett, J., Jr., Daube, B., Jr., Munger, J. W. and Hoffmann, M. R. (1989) A comparison of two cloudwater/fogwater collectors: The Rotating Arm Collector and The Caltech Active Strand Collector. submitted to *Atmos. Environ.*

Daube, B. C., Jr., Flagan, R. C. and Hoffmann, M. R. (1987a) *Active cloudwater collector.* United States Patent No. 4,697,462.

Daube, B. C., Jr., Kimball, K. D., Lamar, P. A. and Weathers, K. C. (1987b) Two new ground–level cloud water sampler designs which reduce rain contamination. *Atmos. Environ.* **21**, 893–900.

Friedlander, S. K. (1977) *Smoke, Dust, and Haze.* John Wiley and Sons, New York, 317 p.

Jacob, D. J., Wang, R. F. T. and Flagan, R. C. (1984) Fogwater collector design and characterization. *Envir. Sci. Technol.* **18**, 827–833.

Jacob, D. J., Waldman, J. M., Haghi, M., Hoffmann, M. R. and Flagan, R. C. (1985a) Instrument to collect fogwater for chemical analysis. *Rev. Sci. Instrum.* **56**, 1291–1293.

Table 1. Caltech Active Strand Cloudwater Collector (CASCC) Operating Parameters

Parameter	Value
Strand diameter, μm	508
Total strand length, m	190
No. of rows of strand	6
Strand spacing, mm	1.8
Air flow rate, $m^3 \cdot min^{-1}$	24.5
Percent of air sampled, total	86.0
Total sampled flow, $m^3 \cdot min^{-1}$	21.1
Droplet diameter size–cut (50% efficiency), μm	3.5
Average velocity at strands, $m \cdot s^{-1}$	8.5
Pressure drop, mm·Hg	0.93
Operating voltage, VDC	14.0
Theor. collection rate, (0.5 $ml \cdot m^{-3}$ LWC), $ml \cdot min^{-1}$	9.0

Table 2. Cloudwater Sensor Operating Parameters

Parameter	Value
Strand diameter, μm	280
Total strand length, m	25
No. of rows of strand	6
Strand spacing, mm	1.1
Air flow rate, $m^3 \cdot min^{-1}$	1.7
Percent of flow sampled, total	84.0
Total sampled flow, $m^3 \cdot min^{-1}$	1.4
Droplet diameter size–cut (50% efficiency), μm	3.5
Average velocity at strands, $m \cdot s^{-1}$	6.0
Operating voltage, VAC	117
Theor. collection rate (0.5 $ml \cdot m^{-3}$ LWC), $ml \cdot min^{-1}$	0.5

Table 3. Caltech Heated Rod Cloudwater Collector (CHRCC) Operating Parameters

Parameter	Value
Rod diameter, μm	3175
Total rod length, m	8
No. of rows of rods	6
Rod spacing, mm	9.5
Air flow rate, $m^3 \cdot min^{-1}$	6.3
Percent of air sampled, total	90.4
Total sampled flow, $m^3 \cdot min^{-1}$	5.7
Droplet diameter size–cut (50% efficiency), μm	7.7
Average velocity at strands, $m \cdot s^{-1}$	9.0
Pressure drop, mm·Hg	0.97
Operating voltage, VAC	117
Theor. collection rate, (0.5 $ml \cdot m^{-3}$ LWC), $ml \cdot min^{-1}$	2.2

Figure Captions

Figure 1. Caltech Active Strand Cloudwater Collector (CASCC). Cloudwater droplets are collected by inertial impaction on 508 μm Teflon strands. See the text for details.

Figure 2. Caltech Active Strand Cloudwater Collector (CASCC) collection efficiency as a function of droplet size.

Figure 3. The Caltech Active Strand Cloudwater Collector (CASCC) as modified for use in the Integrated Cloudwater Monitoring System. Major modifications include the addition of automatic covers and an automatic rinsing system.

Figure 4. Autosampler used in the Integrated Cloudwater Monitoring System. Cloudwater collected by the CASCC is fractionated into sequential samples by this refrigerated unit.

Figure 5. Cloudwater sensor used as part of the Integrated Cloudwater Monitoring System. A description of sensor operation is provided in the text.

Figure 6. Detail of the resistance grid incorporated into the cloudwater sensor. Water bridging the gap between the upper grid and the lower plate completes an electrical circuit which sends a signal to activate the collection system.

Figure 7. Schematic outline of Integrated Cloudwater Monitoring System operation.

Figure 8. The Caltech Heated Rod Cloudwater Collector (CHRCC) utilized by the Winter Cloudwater Sampling System. Heat can be dissipated through the stainless steel rods, which comprise the collection surfaces of this sampler, in order to melt accumulated frozen cloudwater.

Figure 9. A comparison of the collection efficiencies of the Caltech Heated Rod Cloudwater Collector (CHRCC) and the Caltech Active Strand Cloudwater Collector (CASCC).

Figure 10. The cloudwater sensor used in the Winter Cloudwater Sampling System. The sensor relies on an increase in the level of backscattering of an infrared light beam to detect the presence of clouds.

Figure 11. Typical output of the backscattering cloudwater sensor during a period without cloud interception.

Figure 12. Typical response of the backscattering cloudwater sensor during several periods of cloud interception. The presence of clouds is indicated by the large positive response peaks evident in the diagram.

Figure 13. The cylindrical passive cloudwater collector utilized in the Passive Cloudwater Monitoring System.

Figure 14. Collection efficiency of the passive cloudwater collector, as a function of wind speed, for several different droplet sizes.

Figure 15. Comparison of the rainfall collection rates, exhibited by the rain gauge and the passive cloudwater collector, as a function of ambient wind speed.

Figure 16. Comparison of the rainfall collection rates, exhibited by the rain gauge and the passive cloudwater collector, as a function of rainfall intensity.

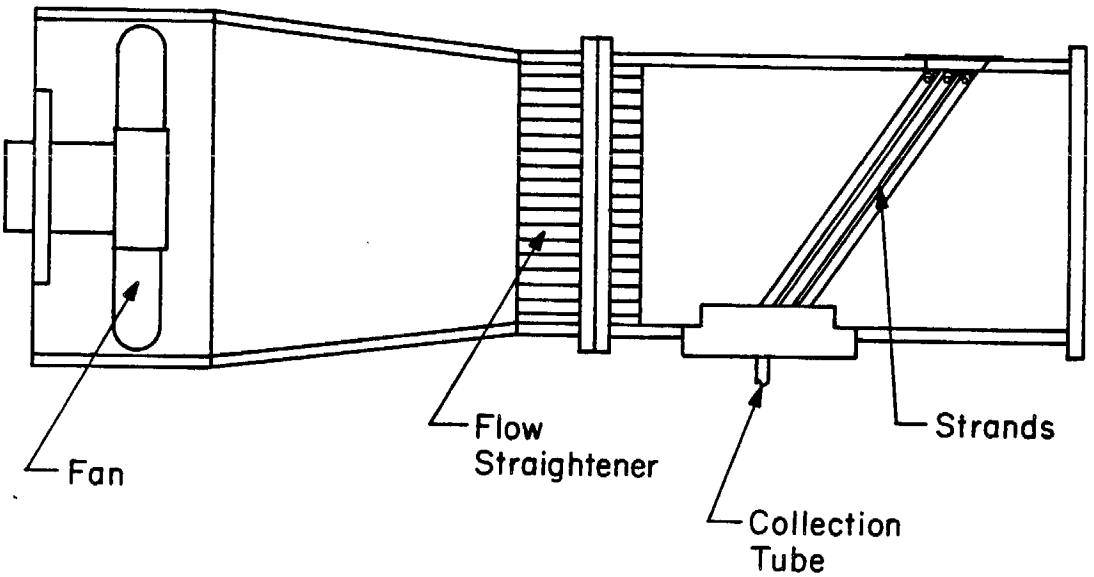

Figure 1. Caltech Active Strand Cloudwater Collector (CASCC). Cloudwater droplets are collected by inertial impaction on 508 μm Teflon strands. See the text for details.

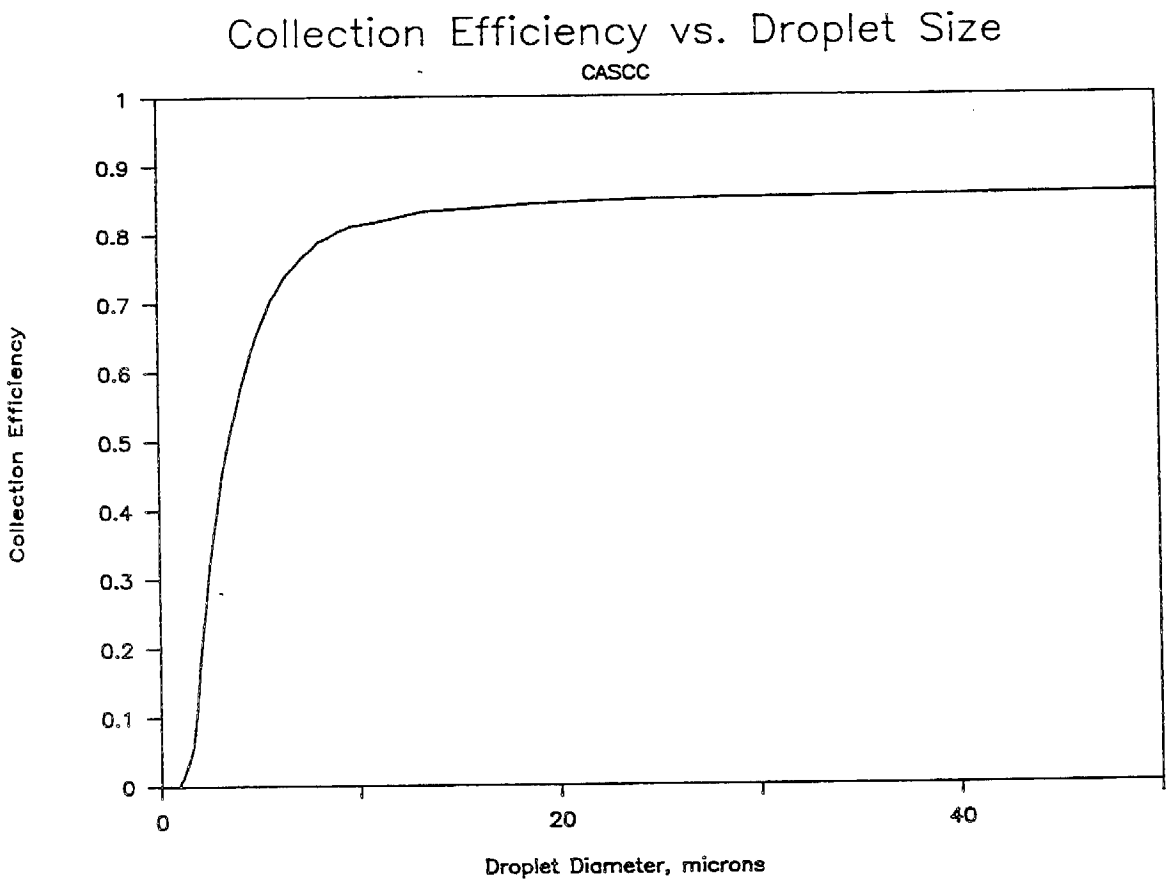

Figure 2. Caltech Active Strand Cloudwater Collector (CASCC) collection efficiency as a function of droplet size.

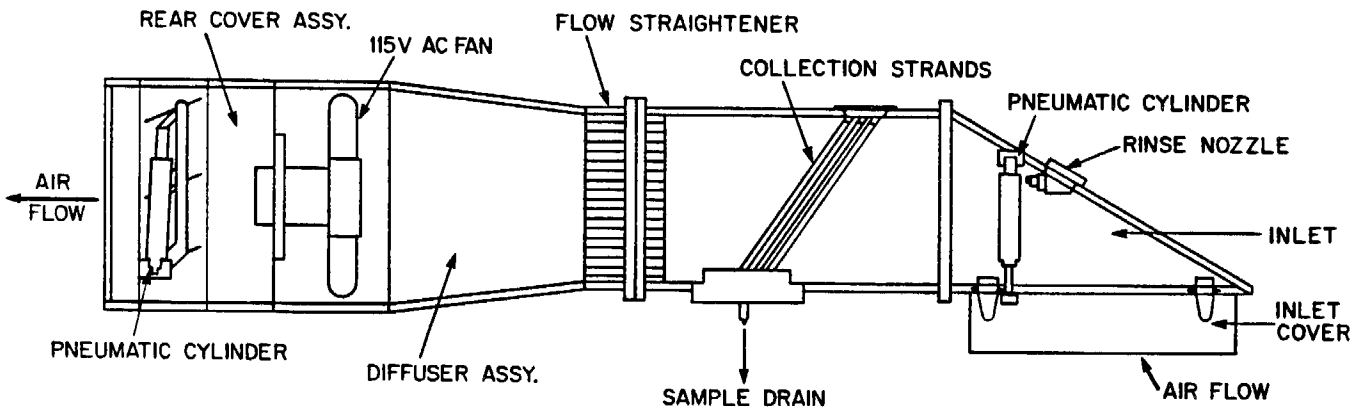

Figure 3. The Caltech Active Strand Cloudwater Collector (CASCC) as modified for use in the Integrated Cloudwater Monitoring System. Major modifications include the addition of automatic covers and an automatic rinsing system.

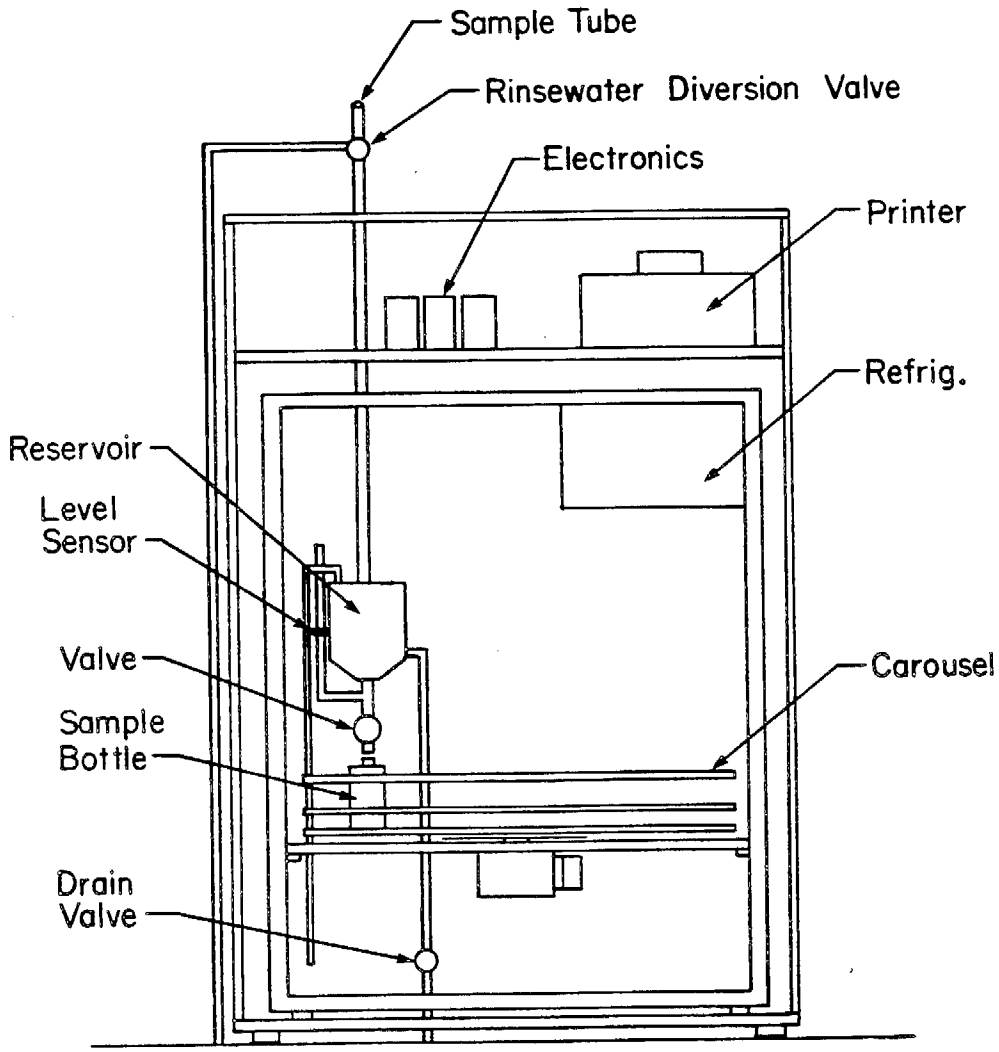

Figure 4. Autosampler used in the Integrated Cloudwater Monitoring System. Cloudwater collected by the CASCC is fractionated into sequential samples by this refrigerated unit.

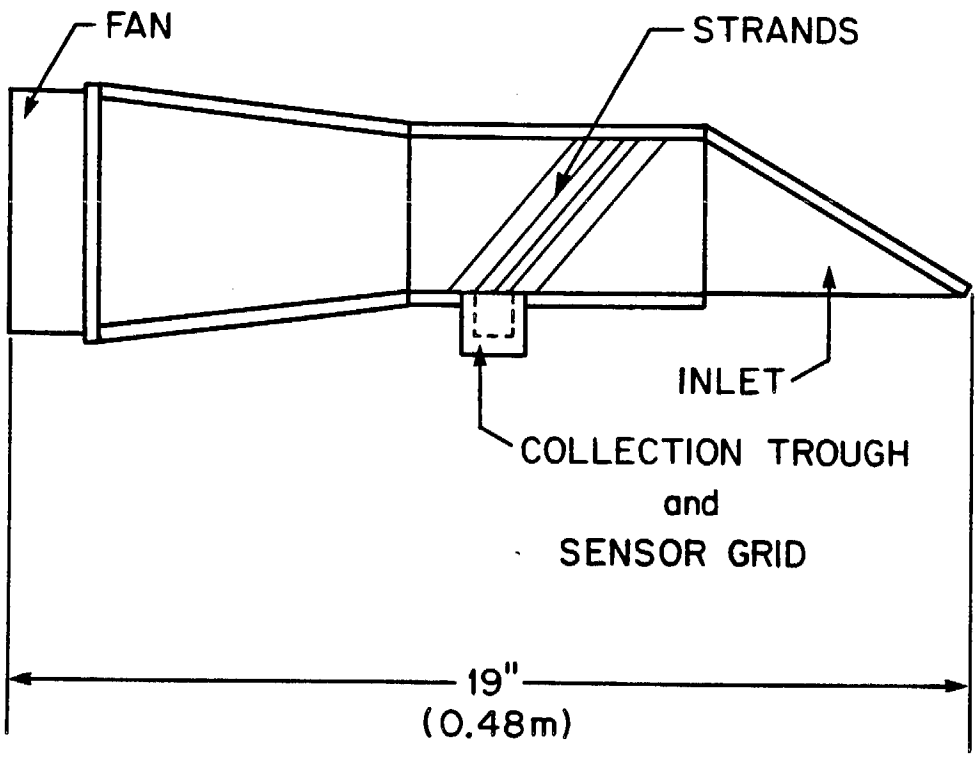

Figure 5. Cloudwater sensor used as part of the Integrated Cloudwater Monitoring System. A description of sensor operation is provided in the text.

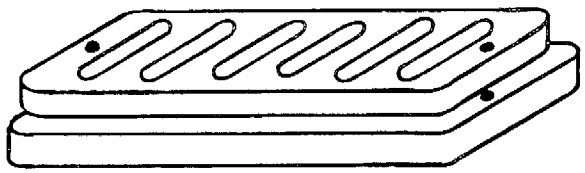

ORTHOGRAPHIC VIEW

Figure 6. Detail of the resistance grid incorporated into the cloudwater sensor. Water bridging the gap between the upper grid and the lower plate completes an electrical circuit which sends a signal to activate the collection system.

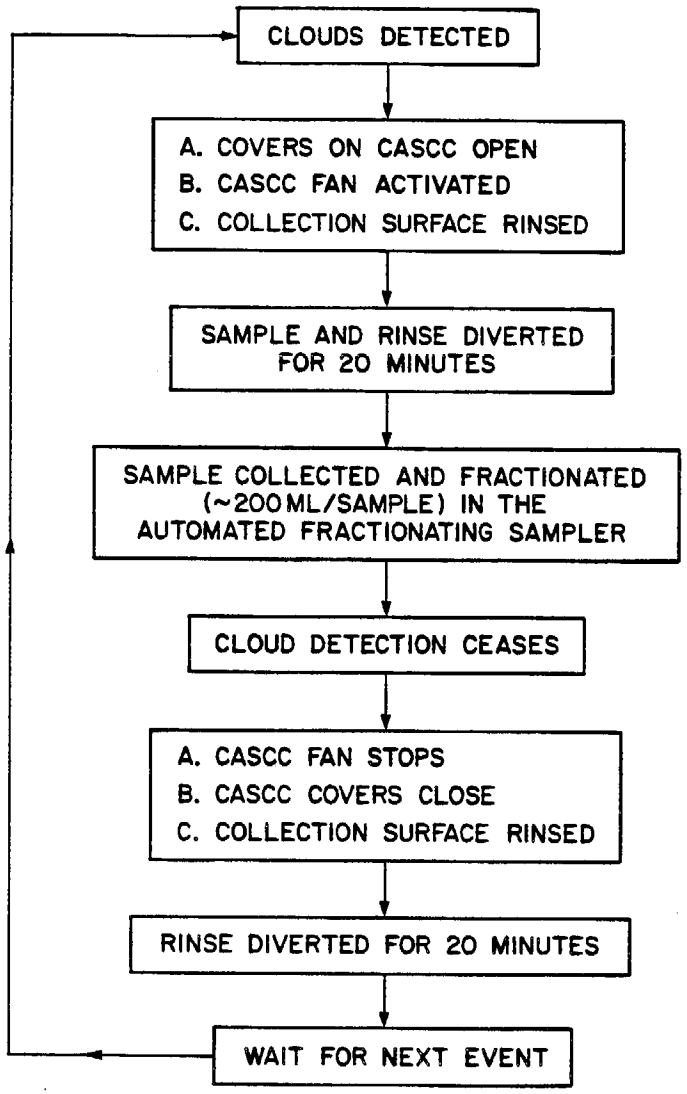

Figure 7. Schematic outline of Integrated Cloudwater Monitoring System operation.

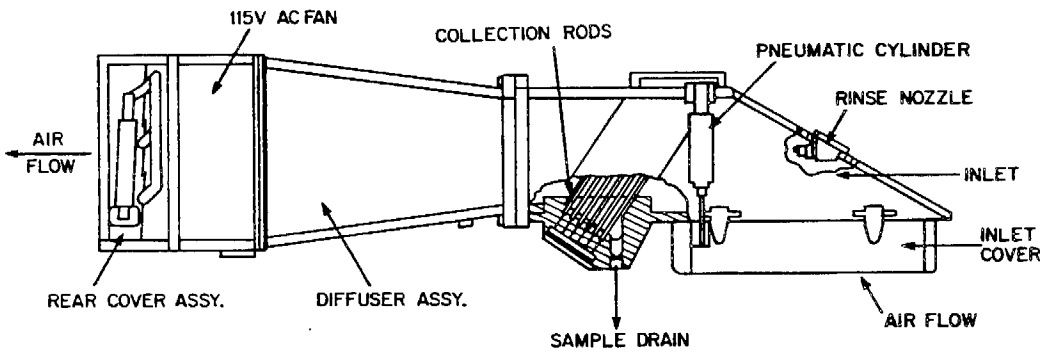

Figure 8. The Caltech Heated Rod Cloudwater Collector (CHRCC) utilized by the Winter Cloudwater Sampling System. Heat can be dissipated through the stainless steel rods, which comprise the collection surfaces of this sampler, in order to melt accumulated frozen cloudwater.

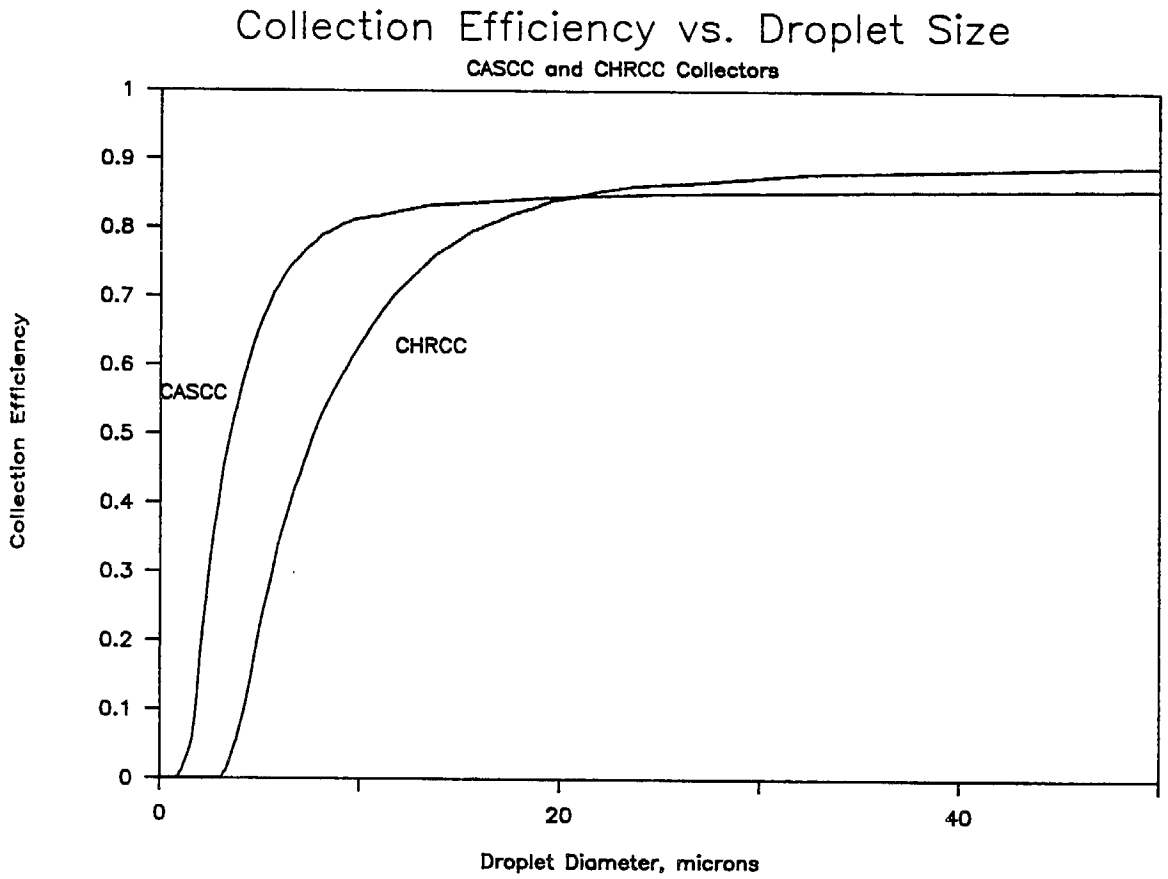

Figure 9. A comparison of the collection efficiencies of the Caltech Heated Rod Cloudwater Collector (CHRCC) and the Caltech Active Strand Cloudwater Collector (CASCC).

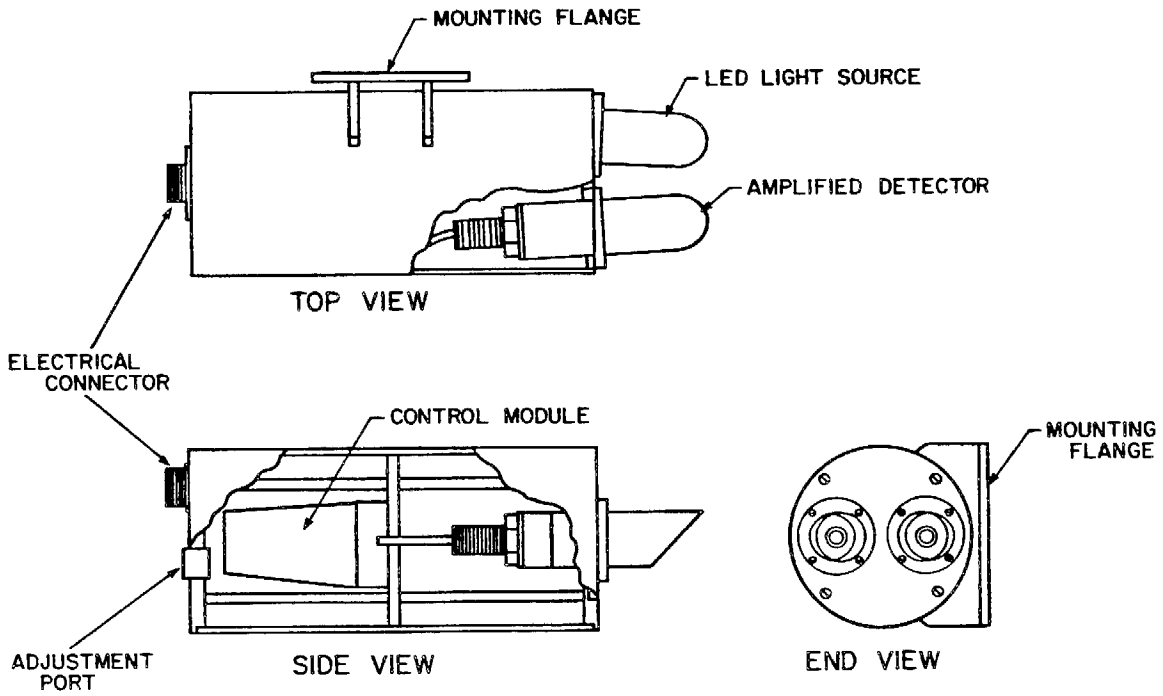

Figure 10. The cloudwater sensor used in the Winter Cloudwater Sampling System. The sensor relies on an increase in the level of backscattering of an infrared light beam to detect the presence of clouds.

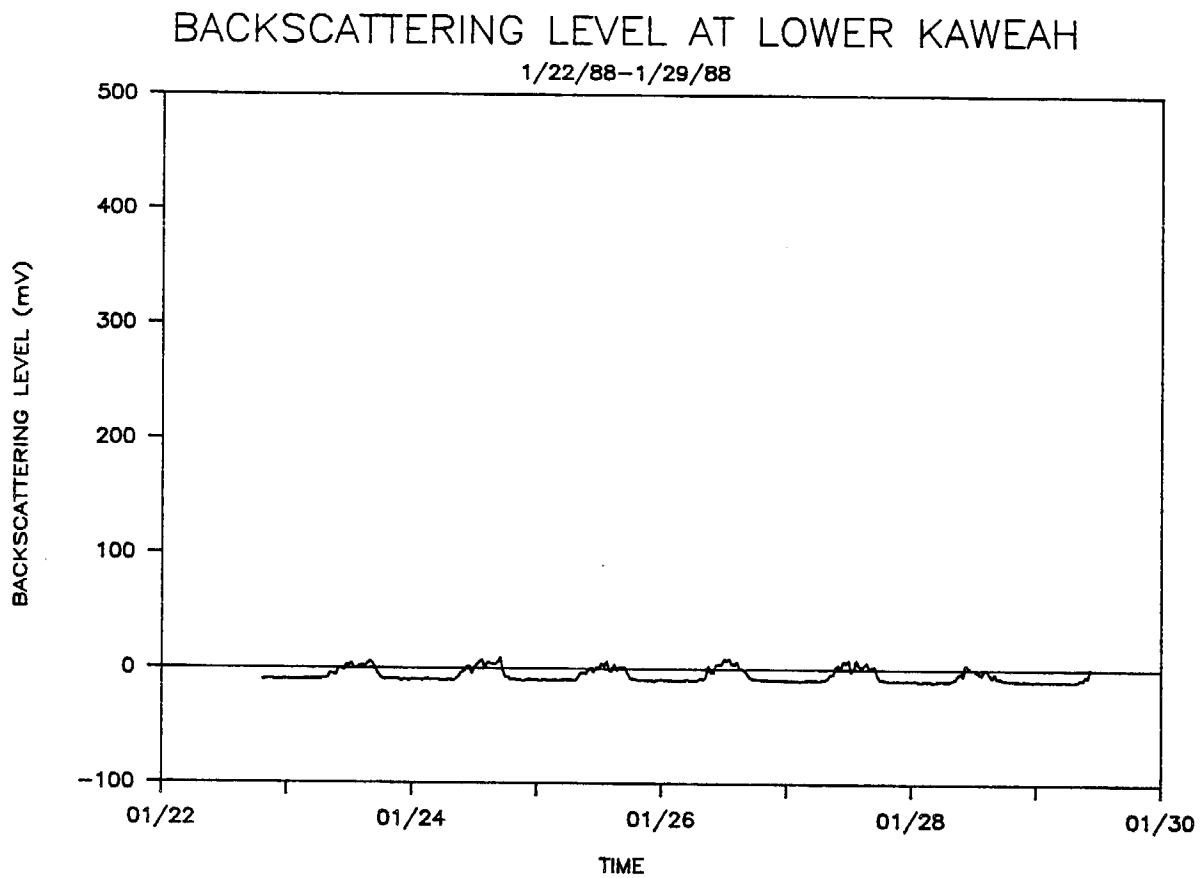

Figure 11. Typical output of the backscattering cloudwater sensor during a period without cloud interception.

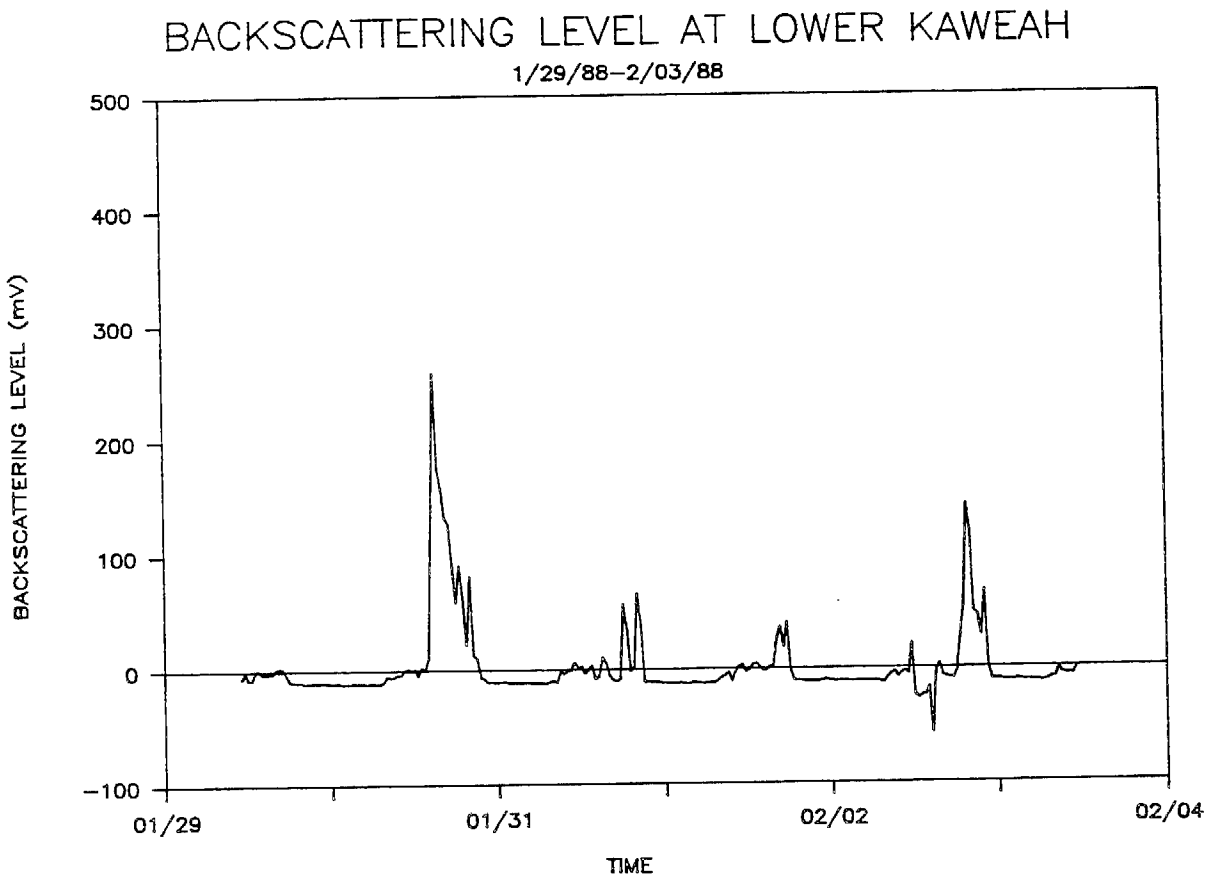

Figure 12. Typical response of the backscattering cloudwater sensor during several periods of cloud interception. The presence of clouds is indicated by the large positive response peaks evident in the diagram.

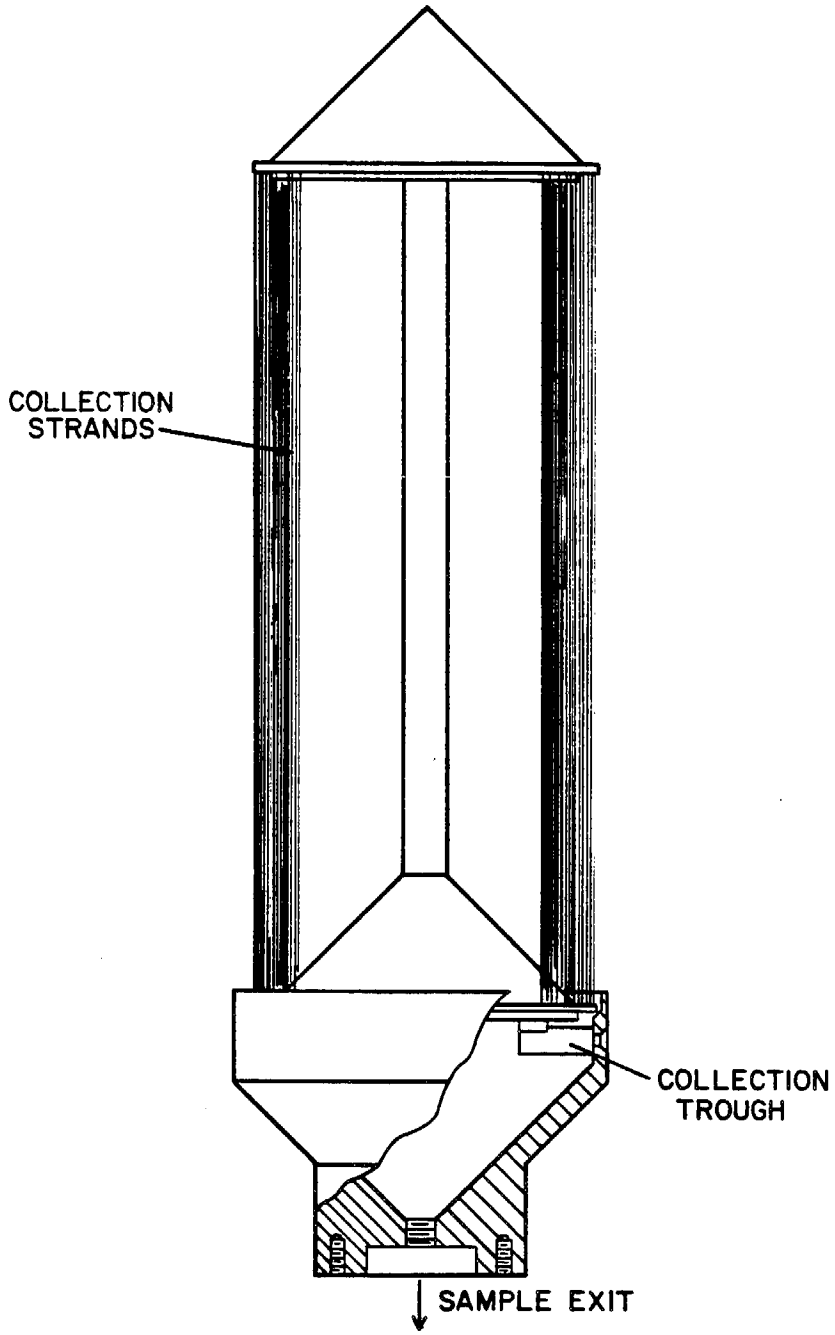

Figure 13. The cylindrical passive cloudwater collector utilized in the Passive Cloudwater Monitoring System.

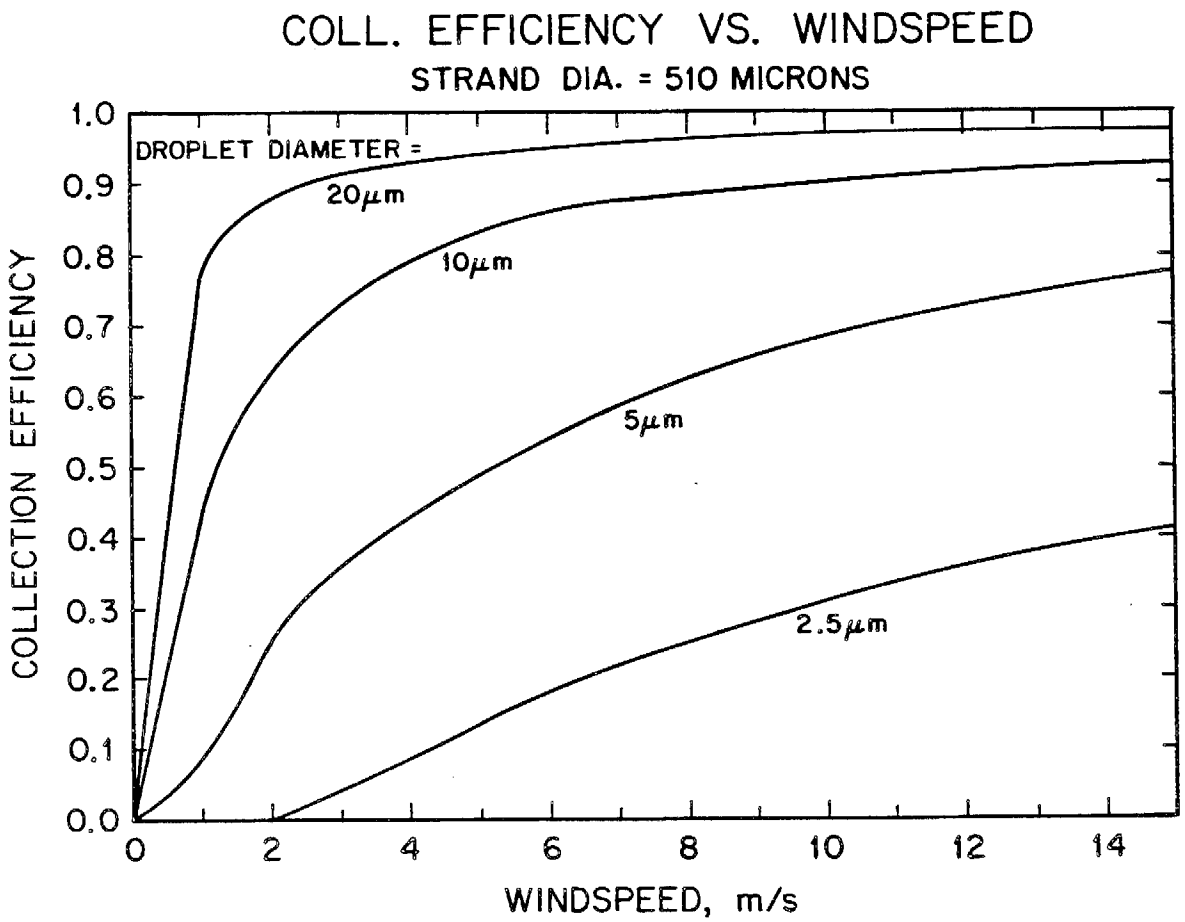

Figure 14. Collection efficiency of the passive cloudwater collector, as a function of wind speed, for several different droplet sizes.

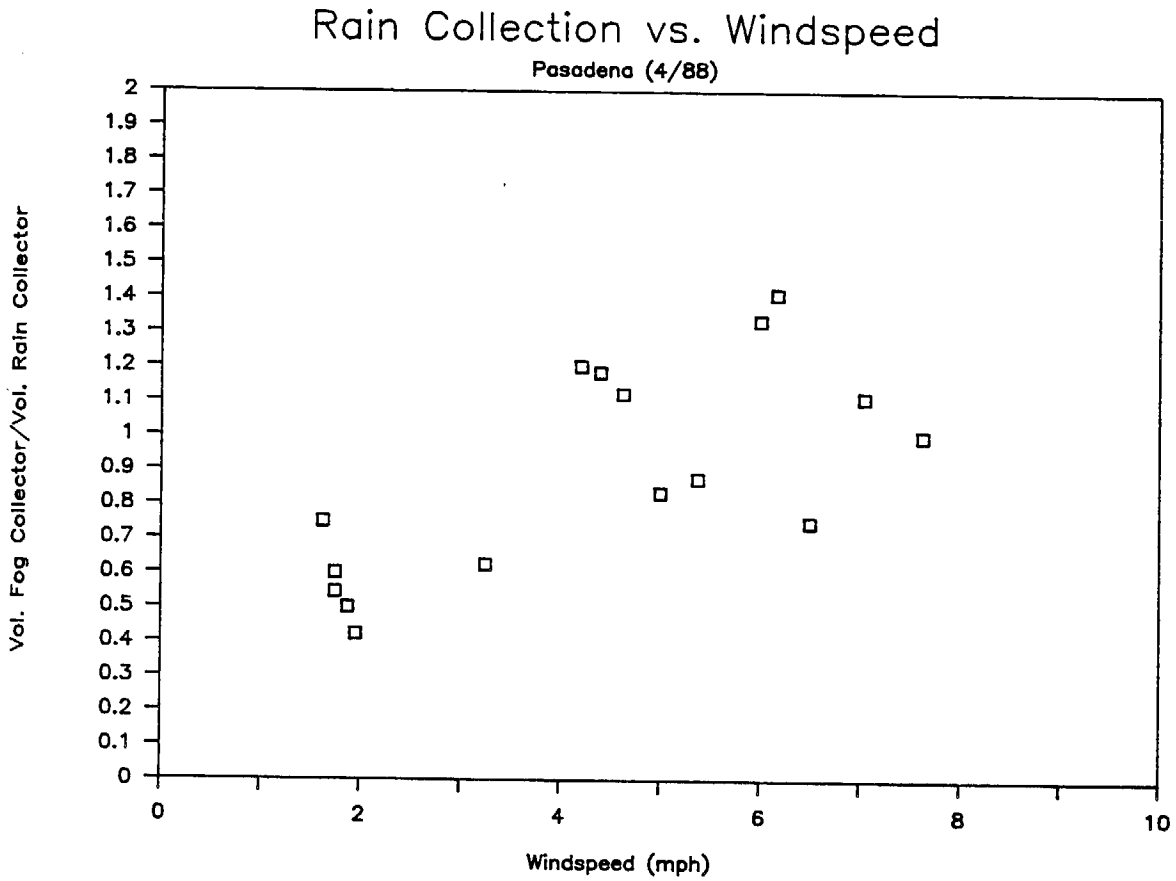

Figure 15. Comparison of the rainfall collection rates, exhibited by the rain gauge and the passive cloudwater collector, as a function of ambient wind speed.

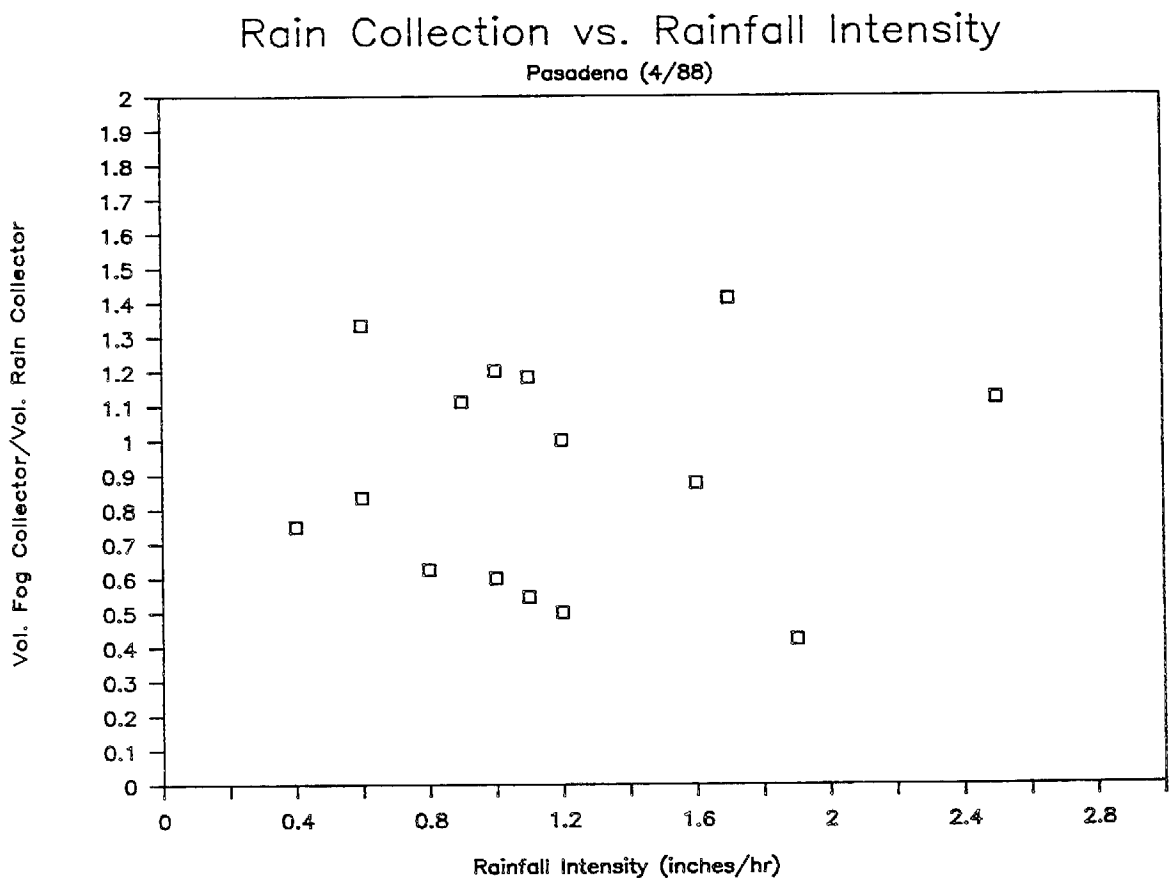

Figure 16. Comparison of the rainfall collection rates, exhibited by the rain gauge and the passive cloudwater collector, as a function of rainfall intensity.

CHAPTER 6

CIT/CARB FOG MONITORING SYSTEM DESIGN AND OPERATION

Introduction

Recent research sponsored by the California Air Resources Board (CARB) has illustrated the widespread occurrence of acidic clouds and fog in California (Hoffmann, 1988). In order to facilitate the incorporation of fog monitoring into the routine monitoring activities of the CARB, the California Institute of Technology / California Air Resources Board Fogwater Monitoring System (CIT/CARB FMS) was developed. The CIT/CARB FMS is used to automatically collect samples of fogwater for chemical analysis. The samples are retrieved on a weekly basis by a site operator. The system is comprised of an active strand–type fogwater collector, a backscattering–type fog detector, an anodized aluminum stand for the collector and fog detector, a refrigerated housing containing a sample distribution valve and six 2–liter sample bottles, a rinse system, and a compartment containing the controlling electronics, a switch panel, a data–logger, and a printer. Figure 1 is an illustration of the assembled system components. Samples collected by the system are stored in sealed bottles and are maintained at 4 °C by the refrigerator. Information regarding the time period during which each sample was collected is stored in the data–logger and, if desired, output to the printer as each event occurs. A switch on the switch panel controls the flow of data. Alternatively, the system data can be output to a user–supplied data–logger via an external RS–232C port.

Fog Monitoring System Operation

Sampling by the CIT/CARB FMS is initiated when the fog detector output exceeds a preset threshold for 10 consecutive minutes, indicating that the infrared

beam emitted by the fog detector is being scattered back to the detector by fogwater droplets or by an obstruction in the detector's optical path. After the presence of fog has been detected, a rinse cycle is initiated. Distilled water is pumped from a reservoir in the main housing, through a nozzle mounted in the inlet of the collector, and onto the collection strands for one minute. The rinse water flows down the strands, into a collection trough, down through a sample tube, through the distribution valve in the refrigerator, and is directed out onto the ground through the right side of the main housing. The rinse cleans all components of the system which will subsequently contact the fog sample.

Following the rinse cycle, power is applied simultaneously to the fan on the fogwater collector and to an air valve that supplies pressurized air to the pneumatic actuators of the front and rear covers of the collector. The covers open, and ambient air and fogwater droplets are drawn into the collector by the fan. The droplets are collected on a bank of Teflon strands, where they coalesce and are drawn down the strands by gravity and aerodynamic drag into a Teflon collection trough. The collected sample drains out of this trough into a Teflon sample tube, and runs down the tube into the refrigerated portion of the main housing and through the distribution valve. For the first 20 minutes of sample collection, the collected water, along with any residual rinse water, continues to be diverted by the valve to the ground. This is done to ensure that distilled water used in the rinse cycle will not contaminate the fogwater sample. After this delay, the distribution valve is indexed one position, delivering the subsequently collected fogwater into the first of the six sample bottles.

Sample collection continues until the fog dissipates. When the backscattering detector senses that fog has been absent for 10 consecutive minutes,

power is removed from the fog collector fan and air valve. The covers close and the current time is stored in the data–logger and printed, if desired. If the fog does not return within four hours, the event is considered finished and the sample distribution valve is indexed to the next rinse position. A second rinse cycle, similar to the first, is initiated, and the system is rinsed for 1 minute. The system then waits for the arrival of a new fog event. If the cumulative time of sample collection into one bottle exceeds 24 hours, the distribution valve is indexed twice to the next unused bottle if any remain. If, during the collection of a sample, the current sample bottle overflows, a liquid level sensor located on a vent tube above the distribution valve detects the overflow and indexes the distribution valve twice to the next unused sample bottle. If the sixth bottle overflows, the valve indexes once to the next rinse position and the system shuts down. Overfilling of the sample bottles is not expected to occur frequently, since more than thirteen hours of dense fog (liquid water content of 0.5 $ml \cdot m^{-3}$) would be required for the collected sample to exceed the bottle's capacity, based on the expected sample collection rate and the bottle volume.

When the samples are retrieved, the data pertinent to the most recent sampling period are retrieved from the printer. This printout includes a record of when fog was present at the site, when the distribution valve indexed from bottle to bottle, and the duration of each event that was sampled. Additional data regarding the measured backscattering signal during fog can be obtained if desired by actuating a switch on the switch panel in the main housing.

The CIT/CARB Fogwater Monitoring System is designed to collect event samples of fogwater with an anticipated sample retrieval interval of one week. If desired, however, the sampler can be used under different conditions by modifying

the program which controls the system. Programming of the microprocessor–based controller is accomplished through a user–accessible RS–232C port.

Fogwater Collector Design

The collector designed for this system is similar to the Caltech Active Strand Cloudwater Collector (CASCC) used by this group for recent fogwater studies (Daube et al., 1987). However, the CASCC was designed with a high sampling flow rate to obtain multiple samples within a single fog event. Use of the CASCC for obtaining event samples would necessitate the storage of excessively large quantities of fogwater. Therefore, the CASCC was scaled down to create a new collector, called the CASCC2. The CASCC2, which is made predominantly of Plexiglas and Teflon, is illustrated in Figure 2. The operating parameters of the new collector are listed in Table 1.

The CASCC2 collects fog samples by drawing the fog droplets (typical droplet diameters of 2 to 50 μm) through an angled bank of 508 μm diameter Teflon strands, using a fan located at the rear of the collector assembly. The droplets collect on the strands by inertial impaction, coalesce with other collected droplets, and are drawn down into the Teflon collection trough by gravity and aerodynamic drag. A Teflon tube connected to the trough delivers the sample to the autosampler. Samples collected by the CASCC2 contact only Teflon and a small amount of Plexiglas.

Figure 3 shows the theoretical total collection efficiency of the strands of the CASCC2, η_S, as a function of droplet diameter (Friedlander, 1977). The total collection efficiency represents the fraction of droplets entering the collector that are

actually collected. The theoretical 50% efficiency lower size–cut, based on droplet diameter, is 3.5 μm. Therefore, theoretically, 50% of the fog droplets with a diameter of 3.5 μm that enter the collector are collected. Droplets whose diameter is greater than 10 μm are collected with an efficiency of approximately 85%. The collection efficiency does not reach 100% because not all of the air passing through the collector is sampled.

The collection rate of the CASCC2 in $ml \cdot min^{-1}$ is described by equation (1).

(1) $$\text{Collection Rate} = \eta_1 \cdot \eta_2 \cdot Q \cdot LWC$$

Where:

η_1 = Volume fraction of initial droplet distribution collected

η_2 = Fraction of air flow, Q, that is sampled

Q = Flow rate of air through the CASCC2, $m^3 \cdot min^{-1}$

LWC = Fog liquid water content, $ml \cdot m^{-3}$

The fraction collected, η_1, is a function of droplet size and strand collection efficiency; therefore, to accurately calculate the expected collection rate, the droplet spectrum must be known. The droplet spectrum can be approximated using the curves shown in Figure 4 (Best, 1951). These distributions were calculated using equation (2).

(2) $$\beta(D_P) = 0.1 \cdot \left(\frac{n}{a}\right) \cdot \left(\frac{D_P}{a}\right)^{n-1} \cdot e^{-\left(\frac{D_P}{a}\right)^n}$$

Where:

$\beta(D_P)$ = Volume fraction of droplets with diameter D_P

D_P = Droplet diameter, μm

$$a = (909.1 \cdot LWC)^{0.559}$$

$$n = 3.3$$

The coefficients for this equation were determined by Best from statistical fits to a variety of droplet distributions.

The volume fraction of the initial droplet distribution collected by the CASCC2, η_1, is calculated by integrating the product of the strand collection efficiency, η_s, and the volume fraction of the droplets at a given droplet size, $\beta(D_P)$, over the range of droplet diameters present in the fog. Figures 5 and 6 illustrate the resulting portion of the distribution collected by the CASCC2 of several fogs with different liquid water contents. In these figures, the initial droplet distribution has been multiplied by η_2, the fraction of air sampled, to show more clearly what portions of the initial distribution are not collected. Thus, the upper curve of each plot represents the portion of the initial distribution that interacts with the strands of the collector, while the lower curve of each plot represents the portion of the droplet spectrum that is actually collected. The total volume fraction of the initial distribution collected by the CASCC2, η_1, is shown in Figure 7 plotted as a function of LWC; the data has been represented by a fifth–order polynomial fit to the calculated collected fractions. Below a LWC of 0.1 $ml \cdot m^{-3}$, the fraction collected is strongly dependent on the LWC. Above 0.1 $ml \cdot m^{-3}$, the curve becomes linear with a slope near zero, and greater than 92% of the liquid water in the sampled portion of the air flow is collected by the strands.

The percentage of air sampled by the collector, η_2, is a function of the strand geometry and can be calculated using equation (3).

(3) $$\eta_2 = [\, 1 - (1 - \frac{d}{x})^r \,]$$

Where: d = Strand diameter, m

x = Strand spacing, m

r = No. of rows of strands

For the CASCC2, with 6 rows of 508 μm diameter strands spaced 1.8 mm apart, 86% of the air passing through the collector is sampled. The average flow rate of air through the collector, Q, is 5.84 $m^3 \cdot min^{-1}$. Thus, equation (1) yields:

(4) $$\text{Collection Rate} = 5.03 \cdot \eta_1 \cdot \text{LWC}$$

Where:

(5a) $$\eta_1 = 262 \cdot (\text{LWC})^5 - 389 \cdot (\text{LWC})^4 + 219 \cdot (\text{LWC})^3 - 58.2 \cdot (\text{LWC})^2 + 7.4 \cdot \text{LWC} + 0.59 \qquad 0.025 \leq \text{LWC} \leq 0.175$$

(5b) $$\eta_1 = 0.098 \cdot \text{LWC} + 0.94 \qquad 0.175 \leq \text{LWC} \leq 0.5$$

Two equations for η_1 were required to obtain a good fit to the data over the indicated range of LWC. The curve does not apply below a LWC of 0.025 $ml \cdot m^{-3}$. Samples collected under such low LWC conditions are obtained very slowly and are subject to evaporation losses. Thus, estimates of liquid water content based on collection rate below a LWC of 0.025 $ml \cdot m^{-3}$ are probably not meaningful. For a typical fog with a LWC of 0.1 $ml \cdot m^{-3}$, the collection rate is calculated to be 0.47 $ml \cdot min^{-1}$.

These equations may also be used to estimate the liquid water content of a fog based on the collection rate of the CASCC2. Figure 8 is a plot of LWC versus collection rate. This curve is based on the assumption that the droplet distribution is represented by Best's equation and is restricted to the range $0.025 \leq LWC \leq 0.5$ (LWC in $ml \cdot m^{-3}$). Appendix A lists the data from Figure 8 in tabular form, which may be more convenient for conversion of collection rate to LWC. It should be noted that some fogs have significantly different droplet distributions than those represented by the previous equations, and that estimates of the fog's LWC based on the CASCC2's collection rate of these fogs may be inaccurate. Estimates of LWC based on collection rate are most likely to be inaccurate during "patchy" fogs or fogs with very low LWC. The calculated LWC should be treated as an estimate of the true value and should be verified with a second measurement technique whenever possible.

Collector Covers

The CASCC2 is fitted with pneumatically operated front and rear covers to prevent the accumulation of dry deposition inside the collector when it is not in use. The front cover, which is comprised of two halves and is mounted in the collector inlet, opens downward when actuated. When open, the outer, potentially contaminated portion of each cover half is located away from the incoming fog to avoid contaminating the collector or sample. In addition, the cover halves are positioned to discourage water collected on the exterior surface from entering the collector. When the cover is closed, rain or condensation will drain off the lower edges of the collector and will not enter the collection region. The front cover is held closed by springs located in the pneumatic actuators.

The rear cover is comprised of three vanes joined by a linkage. When actuated, the vanes rotate 90 degrees to a horizontal position, allowing air to flow out of the collector with minimal obstruction. The rear cover is located behind the fan at the back of the collector to shield the fan from rain and dirt when the collector is not in use. Both the front and rear covers are actuated from the same air line. The recommended air pressure is 50 psi. A needle valve installed in the air line is used to control the rate at which the covers open. The fan and covers can be operated manually with the switch labelled "FAN" on the switch panel in the main housing. Manual operation is useful for testing the collector operation.

A polypropylene atomizing nozzle is mounted horizontally in the inlet of the CASCC2 and directed toward the collection strands. The nozzle produces a square spray pattern of distilled rinse water droplets which wash the strands and collector inlet at the beginning and end of each event. The distilled water reservoir and the pump that delivers the water to the nozzle are located in the autosampler housing.

The strands and collection trough of the CASCC2 can be removed for cleaning. The strand bank, consisting of three Teflon–coated stainless steel (type 304) cartridges wound with the Teflon collection strands, is removed through a port in the top of the collector. The trough is removed from the bottom of the collector, after removing the strands, by removing four screws and sliding the trough downward. More extensive cleaning of the collector requires removal of the instrument from the stand. The maintenance procedures for the CASCC2 are described in detail in Appendix B.

Backscattering – Type Fog Detector Design

Previous systems designed by this group for the automated collection of fogwater have used a miniature active fog collector, operated continuously, to detect the presence of fog. When fog is present, fogwater collected on the strands of this type of detector drips onto an electrical resistance grid, and is sensed by a circuit which then activates the main collector. This method works adequately, but delays the start of the collection sequence by requiring that enough fog be collected to bridge the detector grid. In addition, this type of detector requires frequent cleaning to prevent excessive fouling of the strands and grid. To avoid these problems, a backscattering–type fog detector was developed.

The backscattering–type fog detector, illustrated in Figure 9, is comprised of an infrared light–emitting–diode (LED) light source, a filtered photodetector, an electronic control module, a calibration relay, an air pump, and a shielded housing. Light is emitted by the LED source over a narrow range of wavelengths, with peak spectral emission at 940 nm. The photodetector's peak spectral response occurs at 910 nm; response is less than 5% at wavelengths below 750 nm to reduce sensitivity to ambient light. Further reduction of the sensitivity of this system to ambient light is obtained by modulating the LED source at 1 kHz. The photodetector is coupled to the source modulation and can be adjusted so that only light at the same modulation as the source is detected. The output of the control module is an analog DC voltage which ranges from 0.0 to 3.0 volts. The output increases with increasing backscattering.

The sight tubes of the housing, which contain the source and detector, are aligned at 5 degrees with respect to each other. At this position, the source and

detector optical paths intersect about 0.75 m from the sensor. This arrangement was experimentally determined to yield the maximum detector output when fog is present. An air pump located in the main housing supplies air to the sight tubes, creating a 1 $l \cdot min^{-1}$ flow out of the tubes. This flow helps keep the lenses of the source and detector free from condensation and discourages insects from nesting in the tubes.

While the effect of ambient light on the detector has been minimized, it has not been eliminated. Because the detector is operated at maximum sensitivity to enhance its performance during fogs with low LWC, some variation in output is observed due to the presence of sunlight. Figure 10 illustrates the typical diurnal variation in the backscattering signal when no fog is present.

To provide a means of comparing the measured backscattering level to the background level sensed by the photodetector, and to provide a means of compensating for the observed diurnal variation, a calibration relay was incorporated into the LED source's power line. When the relay is activated, power is removed from the LED source. The output from the photodetector is then measured to obtain the background value. By measuring the background level frequently, compensation can be made for drift in the electronics of the control module and for variation in output due to changing ambient light levels. The calibration relay can be activated manually with the switch labelled "CALIB." on the switch panel in the main housing. Manual operation is used to check the condition of the control module.

The performance of devices that depend on light scattering by particles is usually correlated to the dimensionless parameter α, where $\alpha = 2\pi \cdot r \cdot \lambda^{-1}$; r is the

radius of the scattering particle, and λ is the wavelength of the light illuminating the particle (van de Hulst, 1957). For the infrared LED source described above, α ranges from about 5 to 200 for typical fog droplets. Over this range of α, the amount of light scattered backward by fog droplets is strongly dependent on the droplet size as well as the LWC (Curcio et al., 1958). The relationship between the relative backscattering intensity and droplet size, at a wavelength of 940 nm, is shown in Figure 11 for water droplets with diameters ranging from 0 to 30 μm (Gumbrecht et al., 1952; Twomey and Howell, 1965). It is evident from Figure 11 that the relative backscattering intensity is non–unique, and highly variable, which makes it difficult to determine the true cause of variations in the backscattering output during an event. The actual output of the detector will not vary as dramatically as shown in the figure since the droplet spectrum of a fog is generally not monodisperse. However, the degree of averaging of the output will vary depending on the size distribution of the fog, so it is recommended that the detector be used only to detect whether or not fog is present, and not to estimate the fog's LWC.

When fog is present, the processed output from the control module, composed of a one–minute average of several hundred backscattering level measurements, typically ranges from 30 to 300 mV. This output, corrected to exclude the background backscattering level, is depicted in Figure 12 for a typical cloud interception event in Sequoia National Park. When fog arrives at the site, the signal increases from about 0 mV to almost 300 mV. Variation in the signal level during the event is due to changes in LWC and/or droplet spectra.

The microprocessor in the autosampler controls the backscattering detector, averages its signal, and determines when fog is present by comparing the measured

level to a preset threshold. The threshold is set by the controller's software to a value of 35 mV. This ensures that the collector will be activated when fog is actually present, while avoiding false starts due to haze or smoke. Visibility must be reduced by the fog to approximately 160 m (0.1 mile) for the system to collect samples. When the visual range exceeds 160 m, the LWC of the fog is usually too low (LWC < 0.025 ml$\cdot$m^{-3}) to obtain a representative sample. The system control program is described in detail in a later section. Maintenance procedures for the fog detector are listed in Appendix B.

Stand Design

A stand was designed to support the CASCC2 and the fog detector at positions suitable for sample collection. The collector is mounted at a height of approximately 3 meters, while the position of the fog detector is variable. The stand is constructed of anodized aluminum. The main tube of the stand is bolted to an anodized aluminum platform which supports the tube and provides a surface upon which rocks or cement blocks can be piled to stabilize the stand. Three guy–wires are also used to ensure that the stand will support the collector in high winds. The guy–wires should be maintained taut at all times by using the turnbuckles located at the upper end of each of the wires.

The top of the main tube has a pivot and mounting flange. The CASCC2 bolts directly to the flange and can be manually positioned so that its inlet faces into the wind. The pivot position can be fixed by installing four bolts through the pivot into threaded holes in the flange. It is recommended that these bolts be left installed when not actually changing the collector's position. The collector does not position itself into the wind.

Autosampler Design

The autosampler developed for the CIT/CARB FMS is designed to collect one sample of fogwater per fog event. Samples are retrieved on a weekly basis. To preserve the collected samples prior to retrieval, they are stored in sealed, high–density polyethylene (HDPE) bottles, and are maintained at a temperature of 4 °C. All surfaces that contact the collected fogwater are rinsed between each sample collection. Control of the autosampler and other components of the system is accomplished with a microprocessor–based programmable controller.

Figure 13 illustrates the autosampler components. The autosampler consists of a main housing, a refrigerator, a distribution valve, six 2–liter HDPE sample bottles, an overflow detection system, a rinse system, an air pump, a programmable controller, a backup battery system, a line printer and interface, a surge suppressor, and several toggle switches for manual control of the sampler system.

Main Housing

The main housing of the CIT/CARB FMS is constructed of aluminum and has been coated inside and out with white, epoxy–based paint. The housing rests on three wooden supports that allow air to circulate beneath the housing to minimize moisture accumulation. The door of the housing is mounted on a continuous hinge and has a cable mounted between it and the housing near the hinge to restrict the door's travel and prevent damage to the hinge. A seal and gutter assembly around the perimeter of the door keeps out rain. The door has two hasps to enable the housing to be locked. A large side panel, retained with theft–resistant screws, provides access to the electronics which control the

autosampler. Removal of this panel is only required for periodic inspection. Four handles are provided to facilitate transport of the sampler.

There are three compartments inside the housing (refer to Figure 13). The largest compartment holds the refrigerator, which is fastened to the housing floor by four bolts. The two remaining compartments, located on the left side of the housing, are covered by Plexiglas doors to shield them from rain when the main door is open. The outer portion of the upper left compartment contains the line printer and switch panel. The inner portion, sealed by an additional panel, contains most of the electronic components. The lower left compartment contains the rinse water pump, the distilled water reservoir, and the air pump. Both the main and lower left compartments have drain holes to prevent accumulation of water in the housing. A bulkhead fitting and tube on the lower right side of the housing is used to direct the rinse water that passes through the distribution valve out of the housing and onto the ground.

The housing is connected to the ground wire of the AC voltage supply line and acts as a shield for the system electronics. Water–resistant electrical connectors, including those for the fan and air valve, the main power line, the backscattering detector signal, and the external RS–232C communication port, and hose connections for compressed air, fog detector sheath air, and rinse water are located on the lower left side of the housing.

In normal use, the housing does not require any special attachment to the mounting platform. If used in exposed areas with high winds, the housing may be secured to the platform with guy wires attached to the handles. The housing should be electrically grounded with a heavy cable and ground spike to minimize the

chance of damage due to a lightning strike. Additional requirements for installation of the autosampler at a sampling site are listed in Appendix C.

Refrigerator

The refrigerator contains the distribution valve, the sample bottles, a bottle rack, and the overflow detector. As previously mentioned, the refrigerator is mounted to the floor of the main housing and is intended to remain installed during transportation and normal use. Temperature adjustment of the refrigerator is accomplished with a control located near the bottom of its front panel. A fan mounted under the refrigerator assembly circulates air around the external cooling coils of the refrigerator and around the main compartment of the housing. External air is not introduced into the housing in order to prevent accumulation of water from impaction of fog droplets on the autosampler components during fog events.

Distribution Valve

The distribution valve controls the flow of the fog sample and rinse water within the refrigerator. As shown in Figure 14, the valve is comprised of a valve body, a rotating disk, an actuator assembly, and an overflow circuit. The rotating disk, which directs sample through the valve, can be indexed to twelve different positions. Six of these positions deliver sample to a sample bottle, while the other six pass sample or rinse water through the valve to a drain tube. As the rotating disk is indexed, it alternates between delivering sample to a bottle or to the drain. The major valve components are made of HDPE and anodized aluminum. All rotating passages within the valve are sealed with Viton o–rings. Sample passing through the valve contacts only HDPE or Viton.

The actuator assembly of the distribution valve consists of a pneumatic cylinder with clevis and cam follower, a twelve–lobe cam, a detent arm, spring and roller, an air valve, a relay, and a metering valve. The actuator moves the rotating disk by engaging the clevis and cam follower in one of twelve slots in the cam, which is mounted to the rotating disk. Operation of the actuator is controlled by activating the relay, which energizes the air valve, allowing pressurized air to reach the pneumatic cylinder. Relay status is determined by the system controller. When the relay is activated, the piston in the pneumatic cylinder extends, rotating the disk through an angle of 30 degrees. The detent roller engages the rotating disk to prevent overtravel. Actuation force is controlled by an air pressure regulator in the main housing. Actuation speed is controlled by the metering valve, located in the refrigerator. The distribution valve can be indexed manually with the switch labelled "INDEX" on the switch panel in the main housing.

The distribution valve is designed to seal the sample bottles when they are not actually receiving a sample. To provide venting of the bottle currently in use, an additional passage was incorporated into the valve. As sample enters the bottle, the displaced air exits the bottle through the vent passage and passes out of the distribution valve to the atmosphere. This passage also serves as a means of detecting an overfilled bottle. When the bottle is full, any subsequently collected fog will cause some of the sample to pass through the vent passage to the top of the distribution valve, where it is detected by a photodetector/lamp assembly. The valve is then actuated to a new bottle position and collection continues. A very small portion of the overflowed sample (about 2 ml) is lost when the valve indexes as it passes the drain position. Since the total sample volume in the event of an overflow must exceed 2000 ml, the lost sample is insignificant. If the overflow detector malfunctions, the excess sample will pass through the vent passage of the

distribution valve and drain through an overflow tube onto the floor of the main compartment. The drain in this compartment will allow the excess sample to drain onto the ground.

Bottle Rack

The sample bottles are held in place in the refrigerator by a bottle rack. The rack, made of anodized aluminum, is designed to hold six 2000 ml HDPE wide–mouth sample bottles. It also serves as a mounting location for the distribution valve. The valve is retained by four screws. The rinse water drain tube, attached to the base of the valve, passes through the tube that supports the distribution valve. Each of the sample bottles have two bulkhead fittings mounted in its cap for attachment of the sample and vent tubes from the valve. The fittings are sealed with a polyethylene washer to prevent loss of water past the fittings if the bottle is overfilled.

Rinse System

The rinse system, located in the lower left compartment of the main housing, supplies the nozzle mounted in the CASCC2 with distilled water when activated by the system controller. The system consists of a Teflon diaphragm pump, a 9 liter reservoir, and a relay. When the relay is activated, the pump is switched on. Distilled water is drawn from the reservoir and pumped through a HDPE tube to the rinse nozzle. The vent on the reservoir is filtered to prevent contamination of the rinse water. The rinse water contacts only Teflon and HDPE. The rinse pump can be activated manually with the switch labelled "RINSE" on the switch panel in the main housing. Manual operation is used to clean the system during weekly site

visits.

Switch Panel

The switch panel, located in the main housing, contains the 10 toggle switches used to configure and manually control the system. The switch labels are shown in Figure 15. The switch functions are described in other sections of this document. In addition to the switches, the panel contains the main system fuse and an LED. The fuse (Type 3AG, 6 amp) protects all of the circuits within the autosampler except the refrigerator. A separate, 15 amp circuit breaker in the surge suppressor, protects the refrigerator and acts as backup protection for the system if the fuse malfunctions. The LED illuminates when power is applied to the circuits of the autosampler.

Autosampler Controller

To achieve the level of performance and flexibility required by the CIT/CARB FMS, a microprocessor–based programmable controller was selected to control the system. Several additional circuits provide support for the controller. These include a charging circuit for the controller's backup battery, a 15 volt DC power supply, an AC power detection circuit, and a surge suppressor. Additional circuits used by the controller include the overflow detector control module, the fog detector control module and calibration relay, the rinse pump control circuit, the distribution valve actuator control circuit, the collector fan control circuit, and the line printer and interface. Figures 16 through 18 illustrate the various circuits.

The microprocessor–based controller chosen to control the system is a

Campbell Scientific CR10 Measurement and Control Module. The device is programmed with a remote terminal through an external RS–232C port with a numerically coded language created by Campbell Scientific that is similar to BASIC. The program memory capacity of the CR10 is 1986 bytes, corresponding to a program of approximately 300 lines of code. A total of 5300 data values may be stored in the CR10 (An optional memory chip is available to upgrade this to 29,900 data values. It is not possible to enlarge the program memory.). Power is supplied to the controller by the 15 volt DC power supply or by the backup battery in the event of a power failure. The CR10 has 6 channels available for differential voltage measurement of an analog signal (13 bit sensitivity), 8 channels for digital input or output, and two pulse counting channels. A wide range of sensors can be used with the CR10. The channels used by the CIT/CARB FMS are listed in Appendix D.

For this system, the main input to the CR10 is the analog backscattering signal. The backscattering detector module, which converts the backscattering detector output to a 0.0 to 3.0 volt DC signal, sends its signal to the CR10 via an 8 meter long shielded cable. Since the signal is fairly small relative to the noise level, it is measured as a differential voltage to avoid errors due to a possible difference in ground levels between the detector and the CR10.

Other inputs to the CR10 include the signal from the AC power detector circuit and the overflow detector. When AC power is present, a small relay remains energized, indicating a digital "high" condition to the controller. If the power fails, the relay switch opens, creating a "low" condition. The program checks the status of this port at several points during execution so that loss of power is detected quickly. When power is lost, all control ports are set "low" to minimize power consumption, thus extending the length of time that the backup battery can supply

the CR10 with adequate power.

The overflow detector circuit functions in a similar way. The overflow control module converts the signal from the overflow detector to a switch–type output. When an overflow occurs, the signal status goes "high". The digital input channel used to monitor the circuit automatically interrupts all other operations in the controller and executes a subroutine to immediately correct the overflow condition.

The remaining inputs to the controller are used to configure the system upon initial execution, to reset the program, and to initiate data transfer. The "DATA CONTROL" configuration input tells the processor whether or not to print data as they are generated. All data are always stored in the controller. Printing the data, as they are created, provides a backup of the stored data. In addition, the printed data are somewhat less cryptic than the stored data because a description precedes each group of data points. The status of the configuration input, controlled by the "DATA CONTROL" switch on the switch panel of the main housing, is read following a reset of the program.

The reset input status, also digital, is determined by the position of a pair of momentary switches wired in parallel. The switches, labelled "RESET", are mounted on the switch panel. If both switches are activated simultaneously, the reset input status is pulled "low". The switches must be activated for about 10 seconds for the processor to acknowledge the signal and reset the program. This delay prevents an accidental reset, which would make the data in the CR10 unavailable to the user without connecting a computer to the RS–232C port.

The data control inputs are configured as "pulse" inputs. If the "PRINT" switch on the switch panel is actuated momentarily, the CR10 detects the pulse and records its occurrence in a buffer; the "DATA DUMP" switch input works the same way, sending a pulse to a second buffer. During program execution, the status of the buffers is checked, and if pulses were detected, the program sends the requested data to the printer. It is not necessary to hold these switches on.

Control of the devices used by the system is accomplished using four of the digital outputs. Each output controls a relay. These outputs control the collector fan/air valve, the distribution valve actuator air valve, the rinse pump, and the fog detector's calibration relay. When one of the digital outputs is set "high", the corresponding relay activates the device connected to it. Switches on the panel in the autosampler, labelled "FAN", "INDEX", "RINSE", and "CALIB.", respectively, permit manual operation of these relays.

Data transfer to the printer and to/from the CR10 is accomplished through two interfaces. The printer is connected to the CR10 with a Campbell Scientific SDC99 Serial Interface. This device permits hardware handshaking between the printer and CR10 to ensure that no data are lost while the printer is busy. The second device, a Campbell Scientific SC32A Optically Isolated Interface, connects the external RS–232C port of the autosampler to the CR10. Programs are loaded into the controller via this port. In addition, data stored in the memory of the CR10 may be accessed remotely through this port. Data transferred through the RS–232C port are not printed by the line printer.

Backup Battery Circuit

The backup battery charging circuit, which maintains the backup battery at full charge when AC power is present, consists of a voltage regulator, several supporting electronic devices, and several diodes. The circuit, mounted on a printed circuit board located in the electronics compartment of the autosampler, is shown schematically in Figure 18. A potentiometer is used to set the voltage output of the circuit to 12.75 volts. The circuit is designed to deliver a maximum current of 180 mA to the battery when the battery is discharged; when the battery is fully charged, the output current drops to approximately 1 mA. The battery, which has a capacity of 1.2 amp·hours, will provide uninterrupted power to the CR10 for several days if the AC power fails. If the sampler will be stored without power for an extended period of time, the main power switch of the autosampler should be turned off. This will disconnect the backup battery, preventing excessive discharge. <u>However, this will also cause the CR10 to lose all information stored in its memory, including the system program.</u> Following the storage period, the program will have to be entered through the RS–232C port by an external computer. An Erasable Programmable Read–Only Memory (EPROM) chip with the system program burned into it can be installed in the CR10 to eliminate program loss when power is removed. Obtaining more experience with the system is recommended, however, before obtaining and installing the EPROM chips.

Control Program

The program written to control the CIT/CARB FMS is rather large, consuming all but 12 bytes of the available memory. Version 1.1 of this program is listed in expanded form in Appendix E. Appendix F contains the actual,

numerically coded program statements. The flag and input memory locations used by the program are described in Appendix G. Finally, Appendix H provides a description of the program's output format.

The CR10 is structured such that the program in its memory is executed at a fixed interval called the scan rate. The scan rate, programmed to be 10 seconds for this system, is normally set to the minimum desired measurement interval. Execution begins with the first program statement, proceeds through the program to the end, and then waits until the remaining time specified by the scan rate has elapsed. Therefore, loops through the program can be used as a measure of elapsed time by incrementing a counter each time the program or loop is executed. In addition, the scan rate aligns itself with the internal, real–time clock, so that one hour averages, for example, start and end on the hour. This simplifies subsequent data reduction.

The initial portion of the control program is an initialization loop. The statements in this loop define the scan rate, check for the presence of AC power, and zero all of the input memory locations and flags. This loop then checks the status of the "DATA CONTROL" switch on the switch panel to determine whether or not to print data as it is generated. Next, the program calls the subroutine that controls the acquisition of the background backscattering level from the fog detector. Finally, the initialization loop sets the backscattering threshold and causes the printer to print the heading "CIT/CARB FMS" to indicate to the operator that the reset is complete. Flag 1 is set "high" to prevent re–execution of the initialization loop until the program is reset.

After initializing the system, the program checks for AC power again. If

power is not present, execution passes to a subroutine that continues to check for power every 2 minutes. When power returns, normal program execution resumes. Next, the program checks the status of the "RESET" switches on the switch panel. If they are both actuated, the rest of the program is bypassed and Flag 1 is set "low", permitting execution of the initialization loop. If the "RESET" switches are not actuated, the program continues and checks the status of the pulse inputs which are used to initiate data output. If one or both of the pulse count buffers contains a count, the appropriate data is send to the printer. If the "PRINT" switch has been actuated, the current value of the Julian day, the time, the error counters, the backscattering levels, and the number of bottles that have been used is printed. If the "DATA DUMP" switch has been actuated, all of the data stored in the CR10 since the last data dump is printed. This includes a backup listing of all of the data printed by the printer as they were generated, as well as a more detailed account of the variation in backscattering levels during times when no fog was present. Thus, every 10 seconds, the status of the AC power detector, the "RESET" switches, and the data control switches is checked prior to executing the rest of the program.

Following the status checks, the controller measures the backscattering signal. The signal is measured repeatedly 100 times and then averaged to smooth the backscattering detector output. If the measured level exceeds the expected maximum or minimum value, the respective error counter is incremented by one count. The contents of the error counters are later printed. Non–zero values of the counters are intended to provide an indication to the operator that the system requires maintenance. The background backscattering level measured previously is subtracted from the measured backscattering average and the new value is added to a one–minute sum. After one minute, the six, 100 measurement corrected average values, are averaged to yield the corrected, stored value, that is used in subsequent

processing.

Every 60 seconds, the program enters a loop in which most of the decisions regarding what the components of the system should be doing are made. First, the program checks to see if any unused sample bottles remain. If so, and the backscattering level is above the threshold, indicating the presence of fog, a counter is incremented. This counter keeps track of the number of consecutive, one–minute backscattering averages that are above the threshold. The maximum possible value is ten. If the backscattering level is below the threshold, two things can happen. If the collector is off, the fog presence counter is set to zero, indicating that the condition for activation of the collector of ten consecutive minutes of fog was not met. If, instead, the collector is on, a fog absence counter is decremented by one. This counter's initial value is set to ten. To turn off the collector, ten consecutive minutes without fog are required. Thus, if the fog absence counter value is reduced to zero, the collector is turned off. In addition, several flags and counters are reset. If the collector remains off for more than four hours, the event is considered finished. The distribution valve is indexed to the next rinse position and a one minute rinse is initiated.

Near the beginning of the one minute loop, the program checks to see if any unused sample bottles remained. If none are left, the programs skips the previous sections, prints a message ("E.O.B."), and records the time. If the last available bottle overflows, a message is printed ("O/F AT"), the time is recorded, and a final rinse cycle is initiated. In either case, Flag 8 is set "high" and most program functions are put on hold until the samples are retrieved and the system reset. Information on the backscattering level and the AC power checks will continue to be stored without interruption.

Next, if any bottles remain, the program uses the previously described fog presence counter to determine whether or not to activate the fog collector. When no fog is present, the counter remains at zero. However, when fog is present, and the counter reaches ten, the collector is activated and a pre–rinse cycle is started. After one minute, the rinse is stopped. However, for the subsequent 20 minutes, any fogwater collected by the system is diverted to the ground to remove any residual rinse water. After 20 minutes, the program activates the distribution valve, indexing it to a bottle position.

A counter is incremented each time the program execution passes through the one minute loop when the collector is on. If this counter indicates that collection has occurred for a cumulative duration of 24 hours into a single sample bottle, the distribution valve is indexed to the next bottle.

After leaving the one minute loop, the program checks the current time to determine if it should store data on the backscattering level or if it should calibrate the backscattering detector. Every 15 minutes, the calibration subroutine is executed. Every hour, the average backscattering background level and the average and maximum values of backscattering signal measured in the previous hour are recorded. A record of the Julian day and actual time is stored every six hours to help decode the stored data following printout. Following this section, execution stops until the scan rate interval has elapsed.

The preceding program description is intended to point out the major features of the system's control sequence. Some details, including most of the data storage and output commands, have been omitted. Refer to the complete program listing in Appendix E for a more detailed description. More information regarding

how to program the CR10 is provided in the CR10 operator's manual.

Sampling Protocol

The recommended sampling protocol is listed in Appendix I. These procedures are designed for weekly collection of the samples and data. The most important aspect of the sample collection process is cleanliness. To obtain meaningful samples, the operator must strive not to contaminate the samples during sample retrieval. In addition, the maintenance procedures regarding periodic cleaning of the system (Appendix B) must be strictly followed. These procedures are based on past field experience with similar instruments and have been found to be necessary. The system blanks collected each week at each site should be analyzed as quickly as possible to determine the overall cleanliness of the system. If the blanks are analyzed promptly, and a problem is discovered, corrective action can be taken immediately, thus preserving the integrity of future samples.

Conclusion

A system was designed to automatically collect event samples of fogwater that can be retrieved on a weekly basis. Five complete units of the CIT/CARB FMS were constructed. The system relies on a backscattering–type fog detector to determine when fog is present, eliminating the problems associated with previous fog detection techniques. A new fog collector was designed, the CASCC2, to yield a sampling rate suitable for the new system. The CASCC2 has covers to prevent contamination of the sampler by dry deposition and a rinse system to clean the collector between sample collections.

A new autosampler was designed to distribute the collected sample to one of six sample bottles and to control the other components of the system. The samples delivered to the autosampler are refrigerated and stored in sealed bottles to minimize degradation. A switch panel in the autosampler permits manual control of the system. A printer records events as they occur.

The described system is programmable. Thus, it is relatively easy to modify the behavior of the sampler by altering the controlling program. Decisions made by the program regarding when to start collecting a fog sample and when to define the end of a fog event may require modification. Further field experience with the system is necessary to determine if any program modifications are required.

The CIT/CARB FMS is designed to minimize the amount of manual labor required to collect fog samples. However, it remains necessary to perform preventative maintenance on the instruments to ensure that the system collects samples that are representative of the actual fogwater. Detailed maintenance procedures and a sampling protocol have been included to assist the site operator with these tasks.

The system has been designed to be as reliable as possible. However, in the event that part replacement is required, all of the components are relatively easy to remove. Many of the components are available commercially; however, some parts may require modification prior to installation. Appendix J contains a list of the commercially available components. In the event of an accident or system malfunction, it is recommended that a representative of the CARB contact our group at Caltech for advice on how to proceed.

References

Best, A. C. (1951) Drop–size distribution in cloud and fog. Q. Jl. R. met. Soc. 77, 418–426.

Curcio, J. A., Knestrick, G. L., and Cosden, T. H. (1958) Further studies on the correlation of backscattering with atmospheric transmission. Naval Res. Lab Rept. 5143, 19 p.

Daube, B. C., Jr., Flagan, R. C., and Hoffmann, M. R. (1987) *Active Cloudwater Collector.* United States Patent # 4,697,462, Oct. 6, 1987.

Friedlander, S. K. (1977) *Smoke, Dust and Haze: Fundamentals of Aerosol Behavior.* John Wiley, New York, 317 p.

Gumbrecht, R. O., Sung, Neng–Lun, Chin, Jin H., and Sliepcevich, C. M. (1952) Angular distribution of intensity of light scattered by large droplets of water. J. Opt. Soc. Am. 42, 226–232.

Hoffmann, M. R. (1988) Fog, Cloud, and Dew Chemistry. Final Report submitted to the California Air Resources Board, Contract No. A4–075–32.

Twomey, S. and Howell, H. B. (1965) The relative merit of white and monochromatic light for the determination of visibility by backscattering measurements. Appl. Opt. 4, 501–506.

van de Hulst, H. C. (1957) *Light Scattering by Small Particles.* John Wiley, New York, 470 p.

Table 1. Operating Parameters of the CASCC2

Parameter	Value
Strand Diameter, μm	508
Strand Length, m	50
No. of Rows of Strands	6
Strand Spacing, mm	1.8
Air Flow Rate, $m^3 \cdot min^{-1}$	5.84
Percent of Air Sampled, Total	86.1
Total Sampled Flow, $m^3 \cdot min^{-1}$	5.03
Lower Size–cut Dia. (50% effic.), μm	3.5
Average Velocity at Strands, $m \cdot s^{-1}$	8.6
Pressure Drop at Strands, mm·Hg	0.90
Fan Operating Voltage, VAC	117
Coll. Rate (LWC = 0.2 $ml \cdot m^{-3}$), $ml \cdot min^{-1}$	0.96

Figure Captions

Figure 1. CIT/CARB Fog Monitoring System apparatus. The system is activated when fog is sensed by the fog detector. Fog is collected by the CASCC2 and delivered to the autosampler, where it is stored in one of six bottles in a refrigerated compartment. A printer records pertinent data collected by the system's microprocessor–based controller.

Figure 2. Modified Caltech Active Strand Cloudwater Collector (CASCC2). Fog is drawn through the collector by the fan. Fog droplets are collected on a bank of Teflon strands, where they coalesce and flow down the strands to the collection trough. A sample tube connected to the trough directs the sample to the autosampler. The covers reduce dry deposition within the collector when it is not in use.

Figure 3. Modified Caltech Active Strand Cloudwater Collector (CASCC2) theoretical collection efficiency as a function of droplet size. The collection efficiency represents the fraction of droplets of a given size entering the collector that are actually collected.

Figure 4. Droplet distributions for fogs of several different liquid water contents (LWC). The LWC, in $ml \cdot m^{-3}$, is indicated next to each curve. These curves are based on statistical fits to a variety of droplet distributions (Best, 1951).

Figure 5. Portion of sampled droplet distribution actually collected by the CASCC2 for fogs with liquid water contents (LWC) of 0.05 and 0.10 $ml \cdot m^{-3}$ (indicated next to each curve). The upper curve of each plot represents the portion of the initial droplet distribution that interacts with the strands of the collector. The lower curve represents the portion actually collected by the CASCC2.

Figure 6. Portion of sampled droplet distribution actually collected by the CASCC2 for fogs with liquid water contents (LWC) of 0.20 and 0.50 $ml \cdot m^{-3}$ (indicated next to each curve). The upper curve of each plot represents the portion of the initial droplet distribution that

interacts with the strands of the collector. The lower curve represents the portion actually collected by the CASCC2.

Figure 7. Volume fraction of the initial droplet distribution collected by the CASCC2 as a function of fog liquid water content (LWC). The initial distribution is assumed to have the form described by Best (1951). The curve is valid over the range $0.025 \leq LWC \leq 0.50$.

Figure 8. Liquid water content (LWC) as a function of the collection rate of the CASCC2. This curve can be used to estimate the LWC of a fog that is collected by the CASCC2. These data are presented in tabular form in Appendix A.

Figure 9. Backscattering–type fog detector. Infrared light emitted by the LED source is sensed by the detector when scattered backward by fog droplets. The control module converts the signal to a DC voltage proportional to amount of backscattered light.

Figure 10. Typical diurnal variation in the output of the backscattering detector when no fog is present.

Figure 11. Relative backscattering intensity as a function of fog droplet diameter (Twomey and Howell, 1965). The wavelength of the incident radiation is 0.94 μm, and the refractive index of the water droplets is 1.33.

Figure 12. Typical backscattering detector output during a cloud interception event. The curve represents subsequent 30 minute averages of the measured backscattering signal.

Figure 13. Components of the autosampler. The autosampler controls the Fog Monitoring System and stores the collected samples in a refrigerated compartment. The distribution valve directs the collected fog sample to the appropriate sample bottle.

Figure 14. Sample distribution valve. The distribution valve delivers the sample collected by the CASCC2 to the appropriate sample bottle. It also diverts rinse water to the ground during pre– and post–collection rinsing.

Figure 15. Switch panel layout. These switches, located in the autosampler, are used to configure the Fog Monitoring System, to initiate data output, and to operate the system manually.

Figure 16. Electrical schematic of the Fog Monitoring System's AC circuitry.

Figure 17. Electrical schematic of the Fog Monitoring System's DC circuitry.

Figure 18. Electrical schematic of the Fog Monitoring System's backup battery charging circuit. This circuit maintains the battery charge when AC power is available and delivers uninterrupted power from the battery to the controller in the event of a power failure.

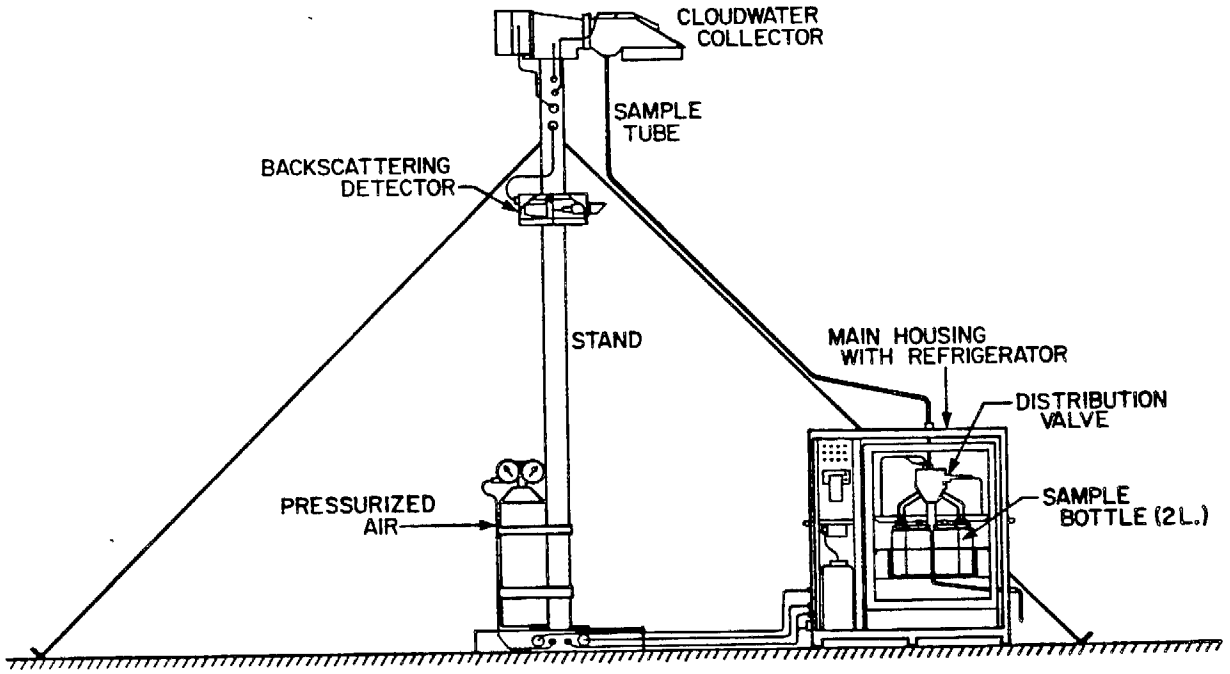

Figure 1. CIT/CARB Fog Monitoring System apparatus. The system is activated when fog is sensed by the fog detector. Fog is collected by the CASCC2 and delivered to the autosampler, where it is stored in one of six bottles in a refrigerated compartment. A printer records pertinent data collected by the system's microprocessor–based controller.

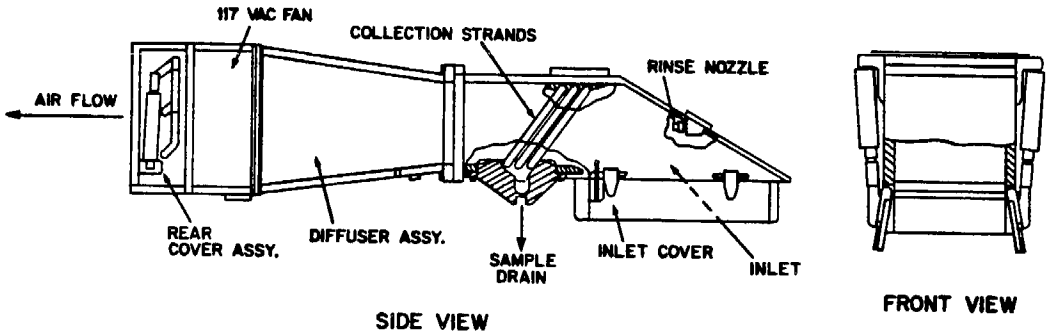

Figure 2. Modified Caltech Active Strand Cloudwater Collector (CASCC2). Fog is drawn through the collector by the fan. Fog droplets are collected on a bank of Teflon strands, where they coalesce and flow down the strands to the collection trough. A sample tube connected to the trough directs the sample to the autosampler. The covers reduce dry deposition within the collector when it is not in use.

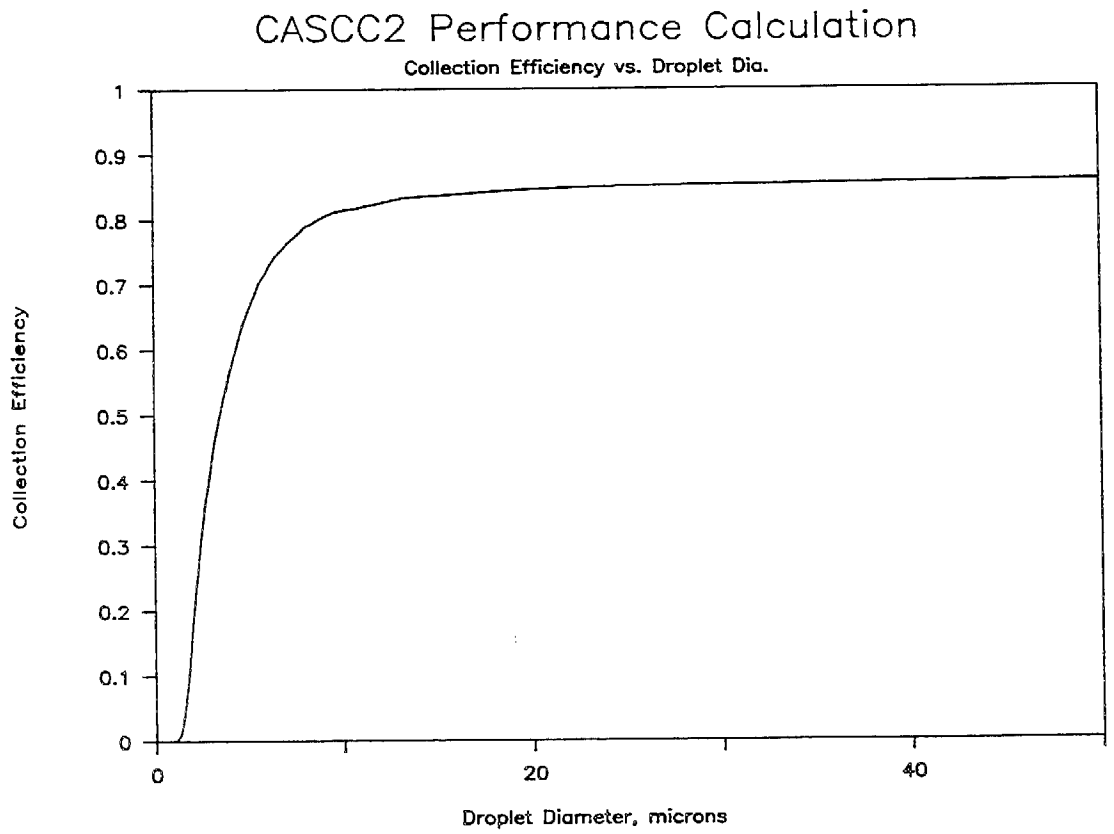

Figure 3. Modified Caltech Active Strand Cloudwater Collector (CASCC2) theoretical collection efficiency as a function of droplet size. The collection efficiency represents the fraction of droplets of a given size entering the collector that are actually collected.

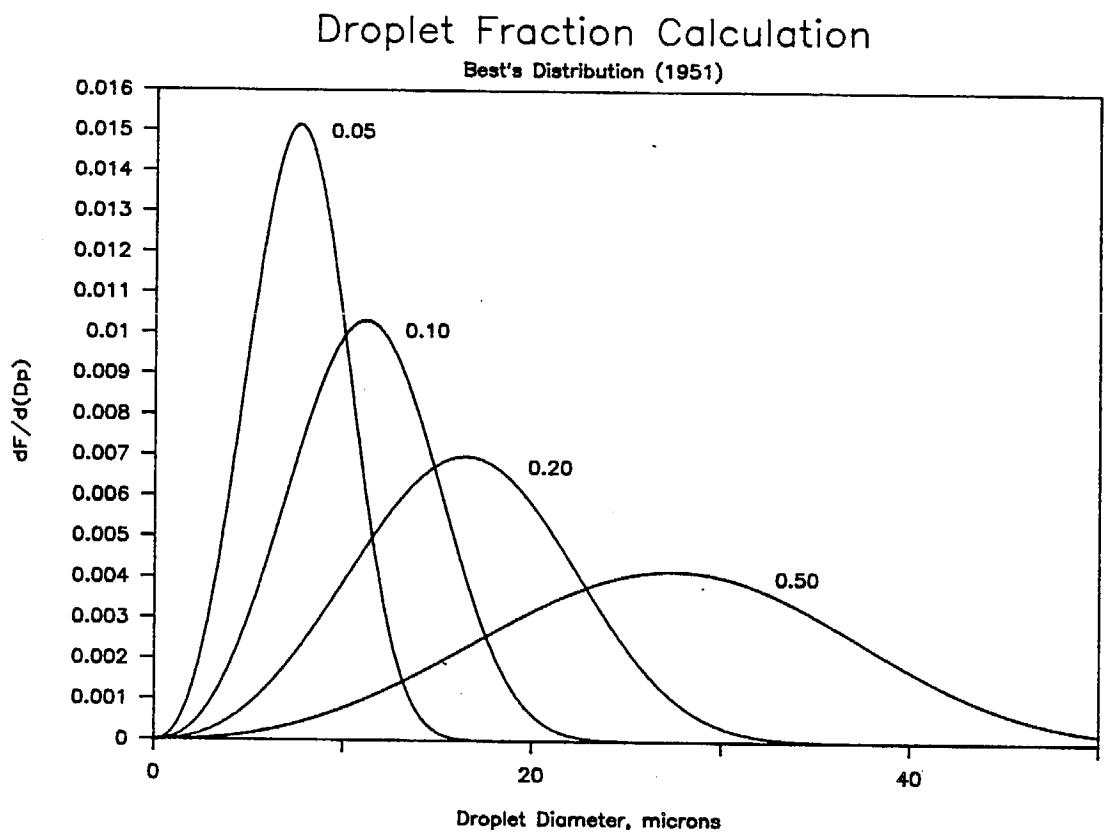

Figure 4. Droplet distributions for fogs of several different liquid water contents (LWC). The LWC, in $ml \cdot m^{-3}$, is indicated next to each curve. These curves are based on statistical fits to a variety of droplet distributions (Best, 1951).

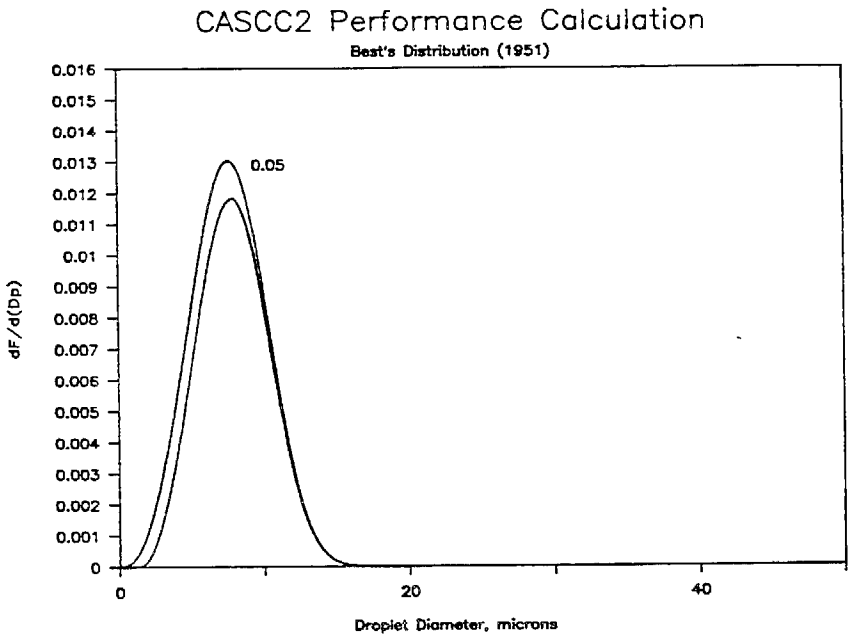

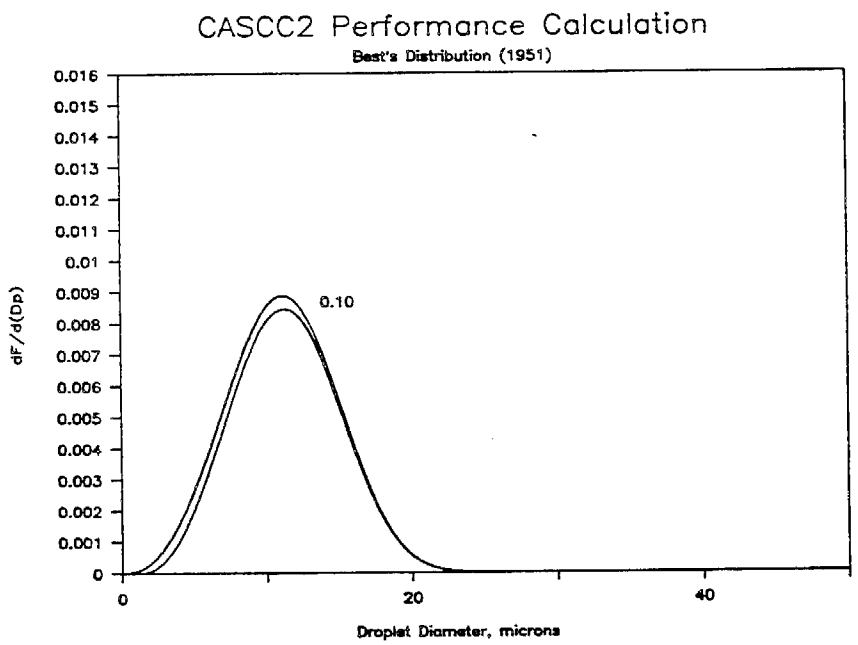

Figure 5. Portion of sampled droplet distribution actually collected by the CASCC2 for fogs with liquid water contents (LWC) of 0.05 and 0.10 $ml \cdot m^{-3}$ (indicated next to each curve). The upper curve of each plot represents the portion of the initial droplet distribution that interacts with the strands of the collector. The lower curve represents the portion actually collected by the CASCC2.

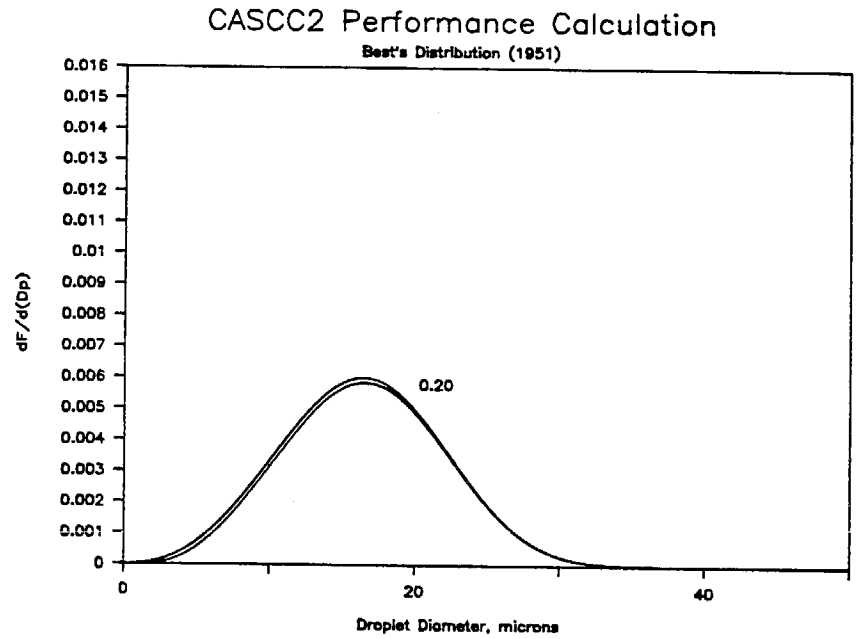

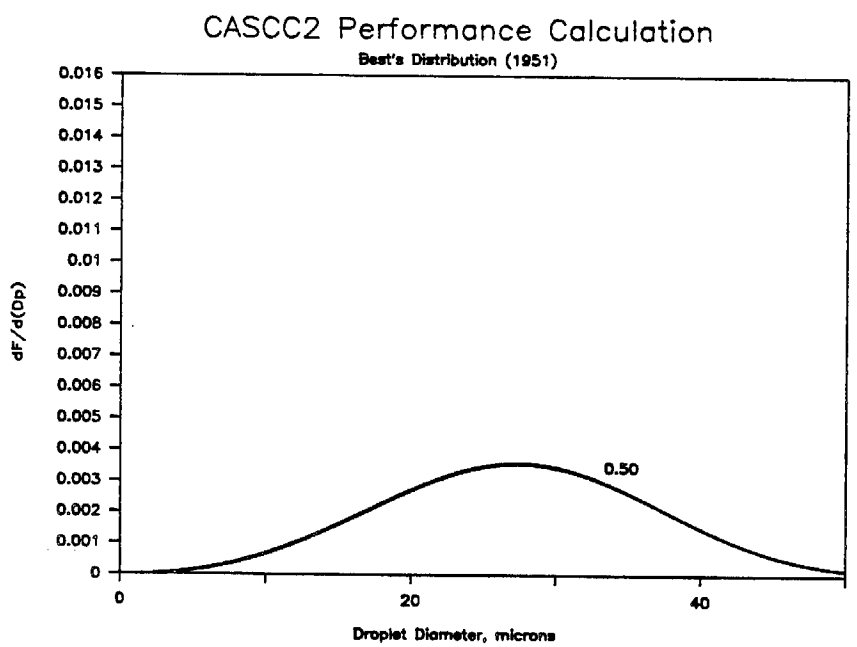

Figure 6. Portion of sampled droplet distribution actually collected by the CASCC2 for fogs with liquid water contents (LWC) of 0.20 and 0.50 $ml \cdot m^{-3}$ (indicated next to each curve). The upper curve of each plot represents the portion of the initial droplet distribution that interacts with the strands of the collector. The lower curve represents the portion actually collected by the CASCC2.

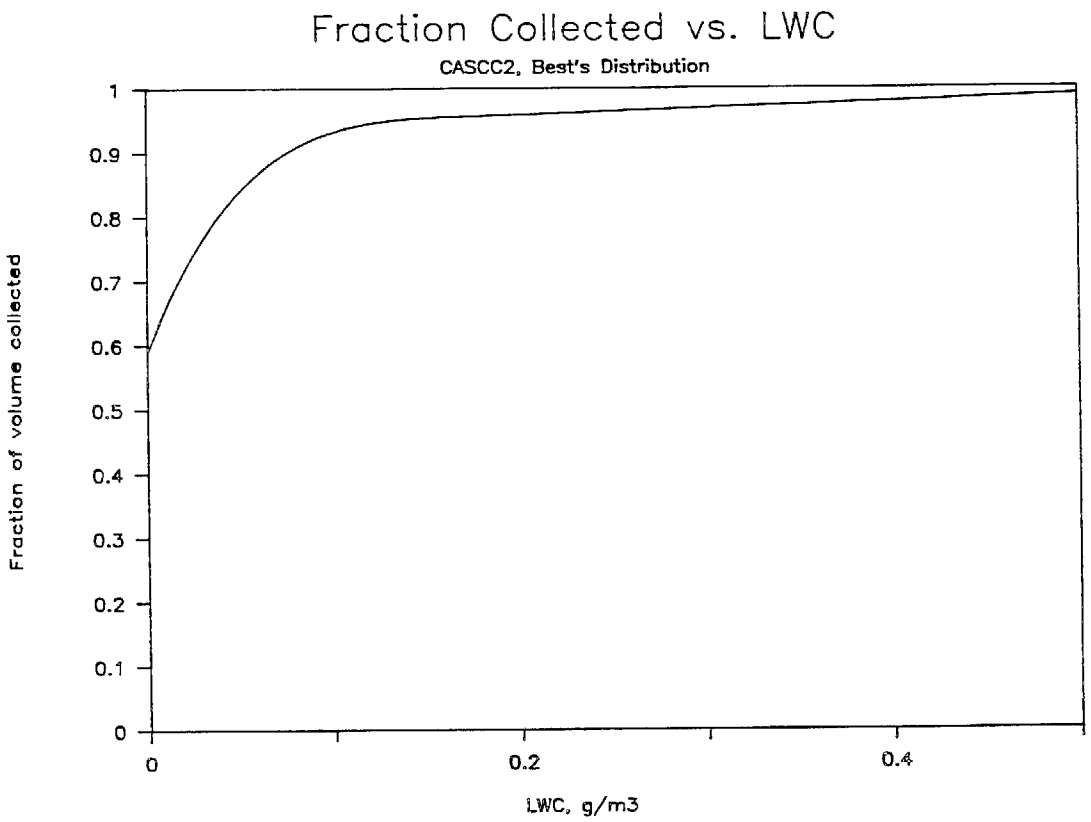

Figure 7. Volume fraction of the initial droplet distribution collected by the CASCC2 as a function of fog liquid water content (LWC). The initial distribution is assumed to have the form described by Best (1951). The curve is valid over the range $0.025 \leq \text{LWC} \leq 0.50$.

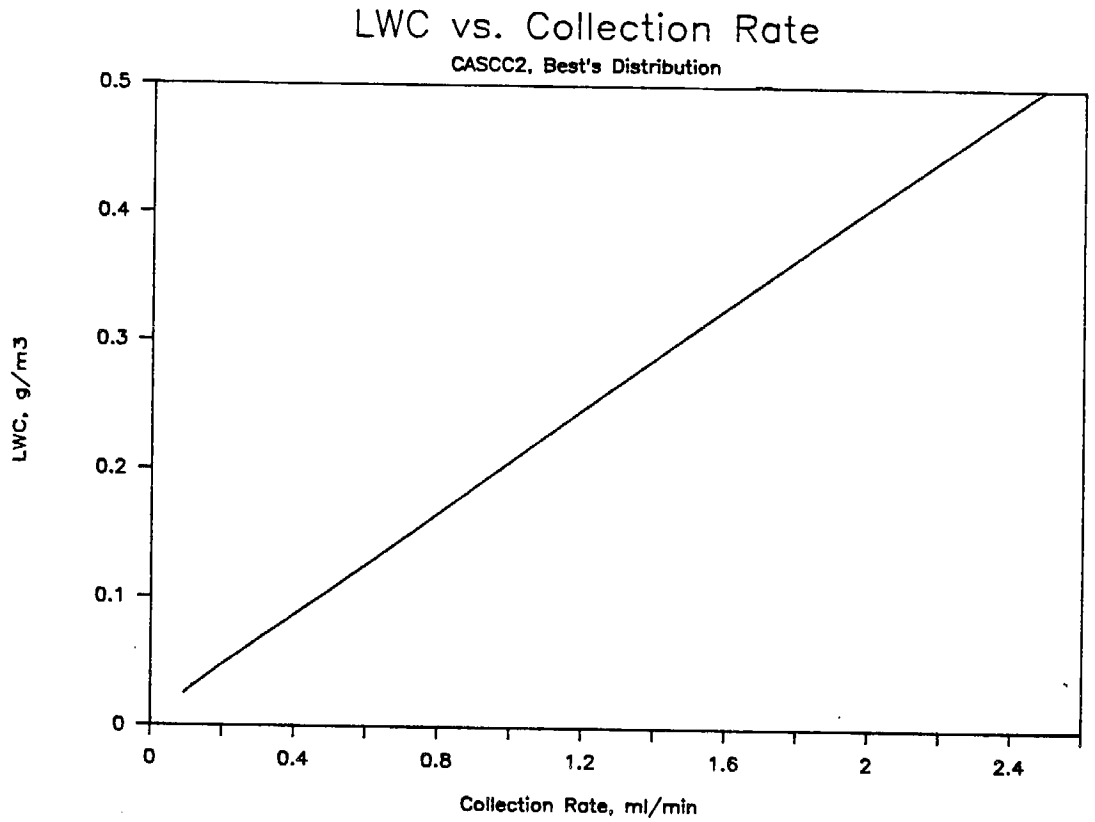

Figure 8. Liquid water content (LWC) as a function of the collection rate of the CASCC2. This curve can be used to estimate the LWC of a fog that is collected by the CASCC2. These data are presented in tabular form in Appendix A.

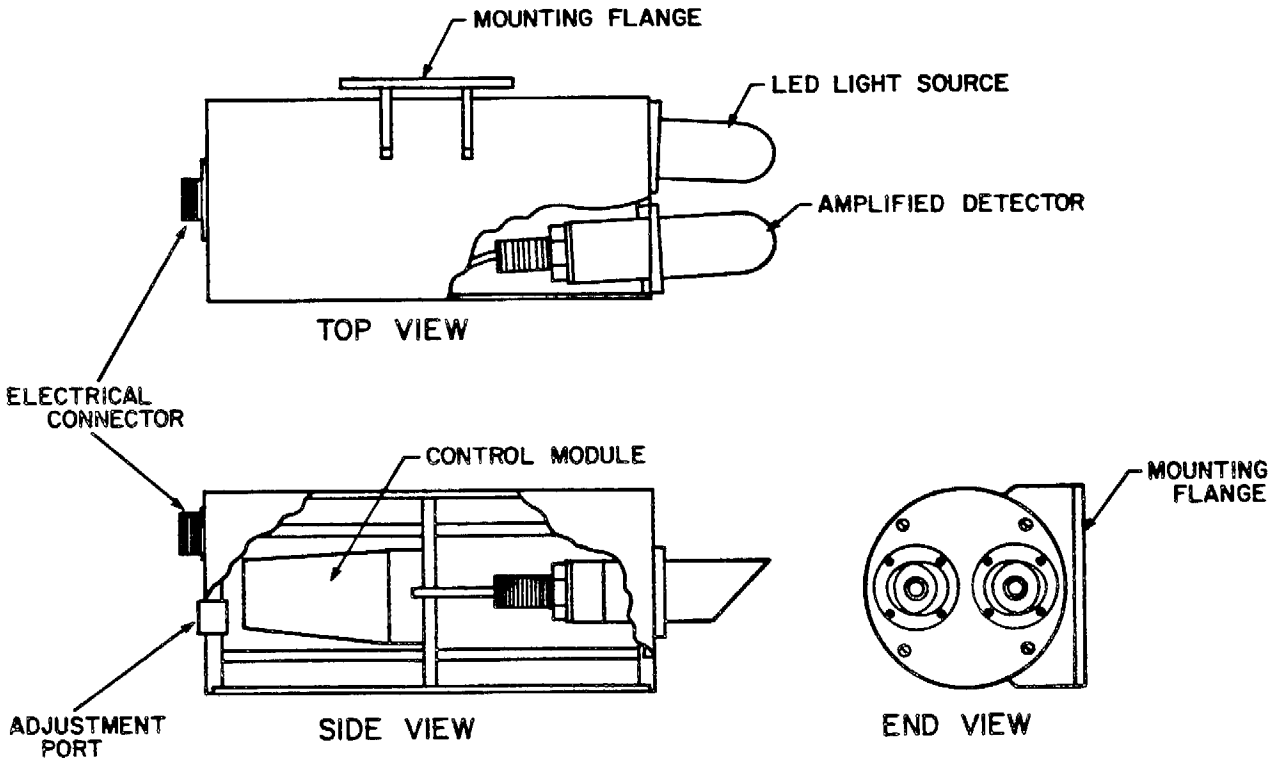

Figure 9. Backscattering–type fog detector. Infrared light emitted by the LED source is sensed by the detector when scattered backward by fog droplets. The control module converts the signal to a DC voltage proportional to amount of backscattered light.

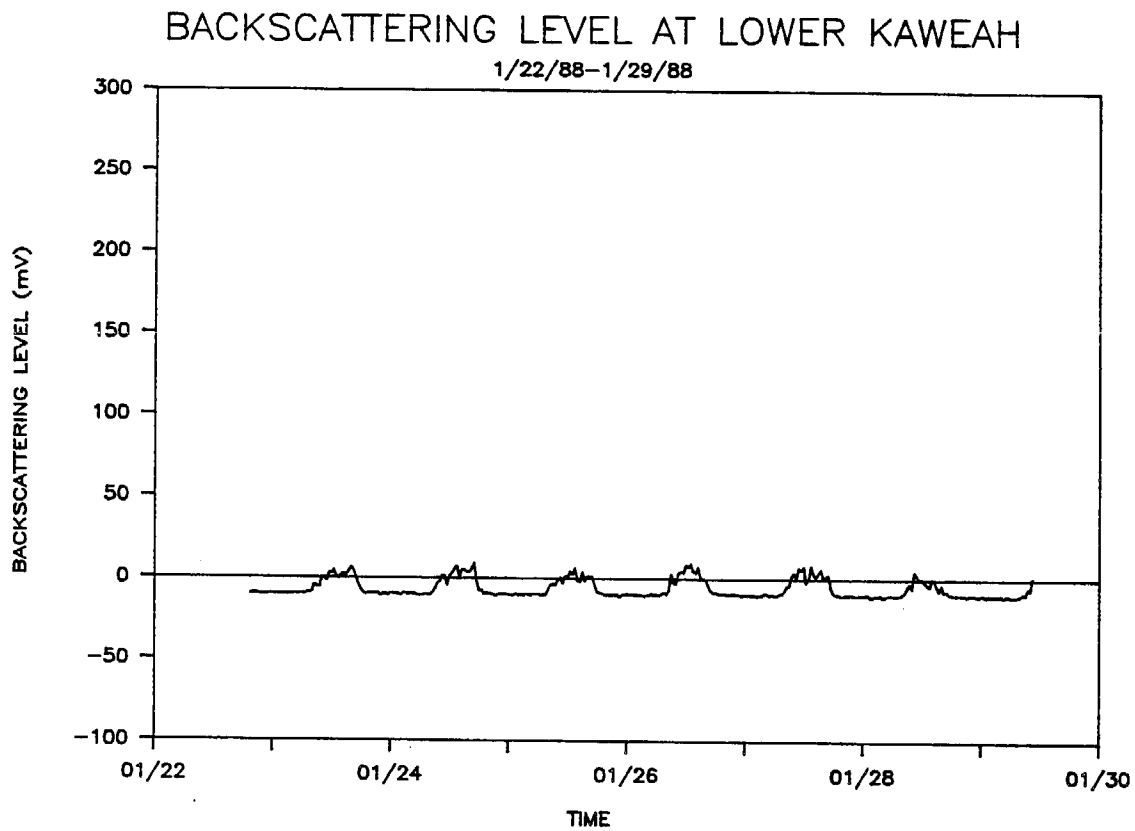

Figure 10. Typical diurnal variation in the output of the backscattering detector when no fog is present.

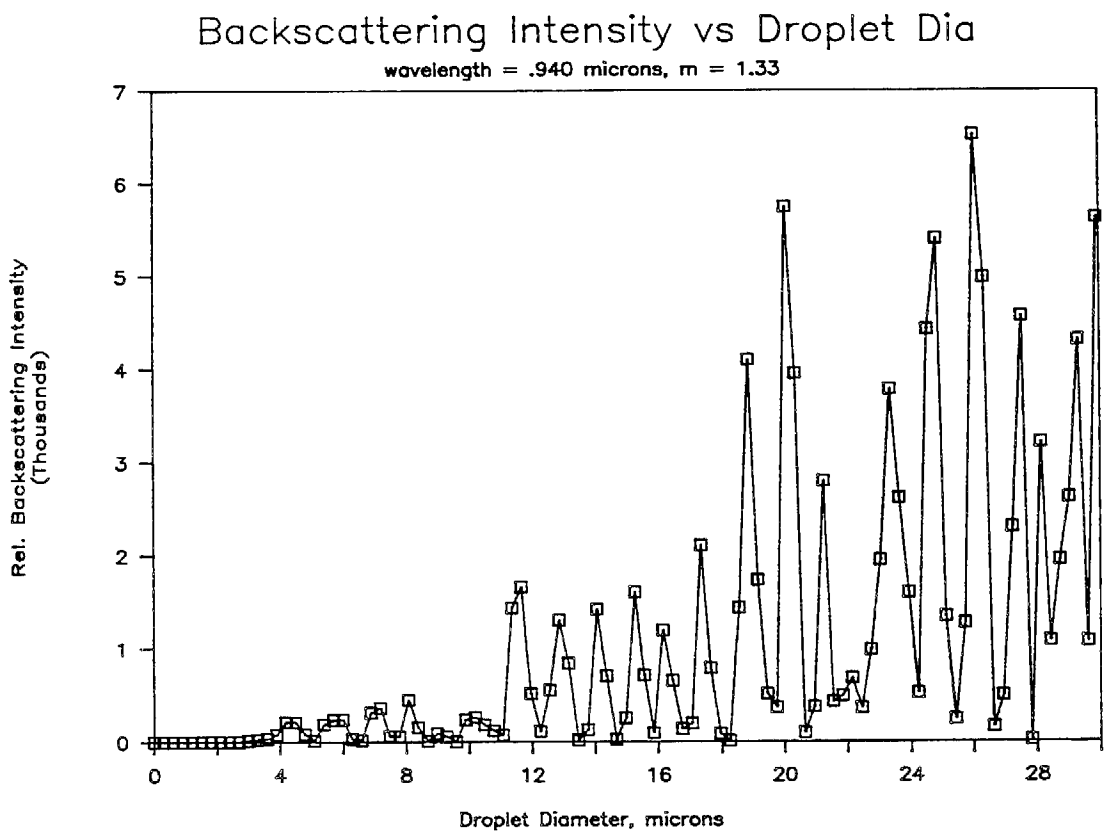

Figure 11. Relative backscattering intensity as a function of fog droplet diameter (Twomey and Howell, 1965). The wavelength of the incident radiation is 0.94 μm, and the refractive index of the water droplets is 1.33.

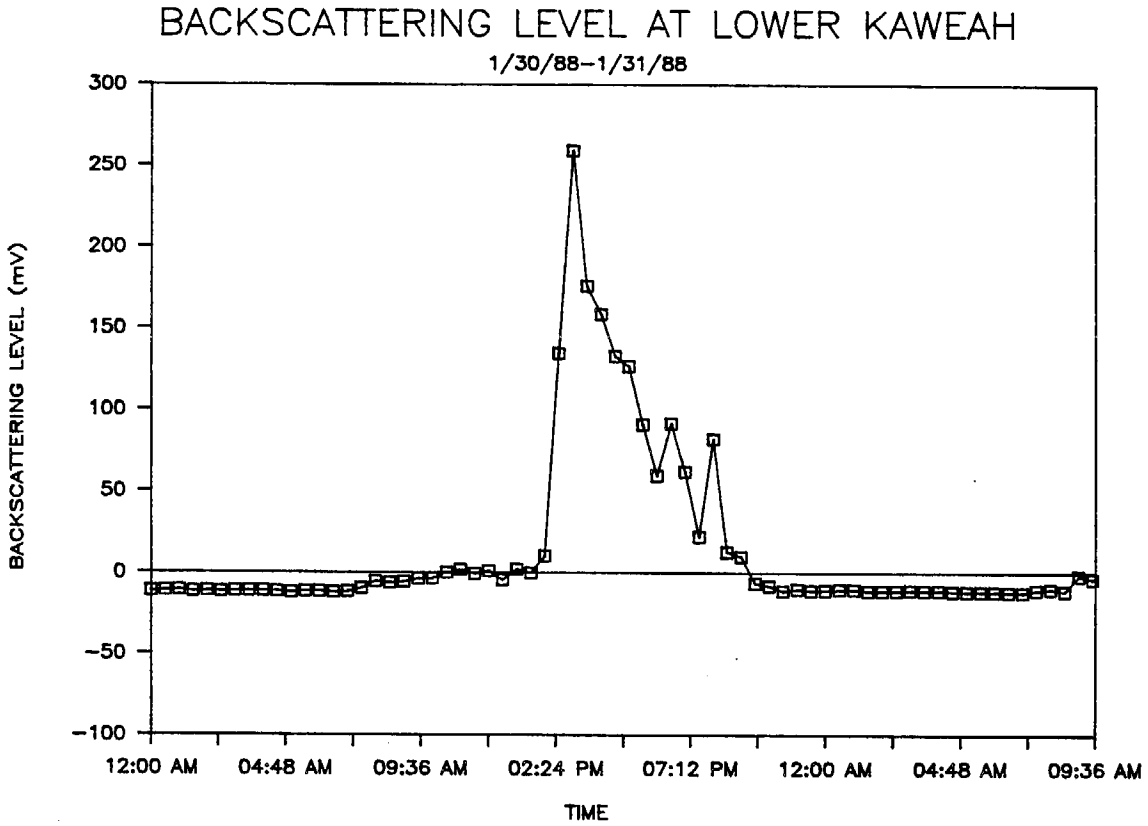

Figure 12. Typical backscattering detector output during a cloud interception event. The curve represents subsequent 30 minute averages of the measured backscattering signal.

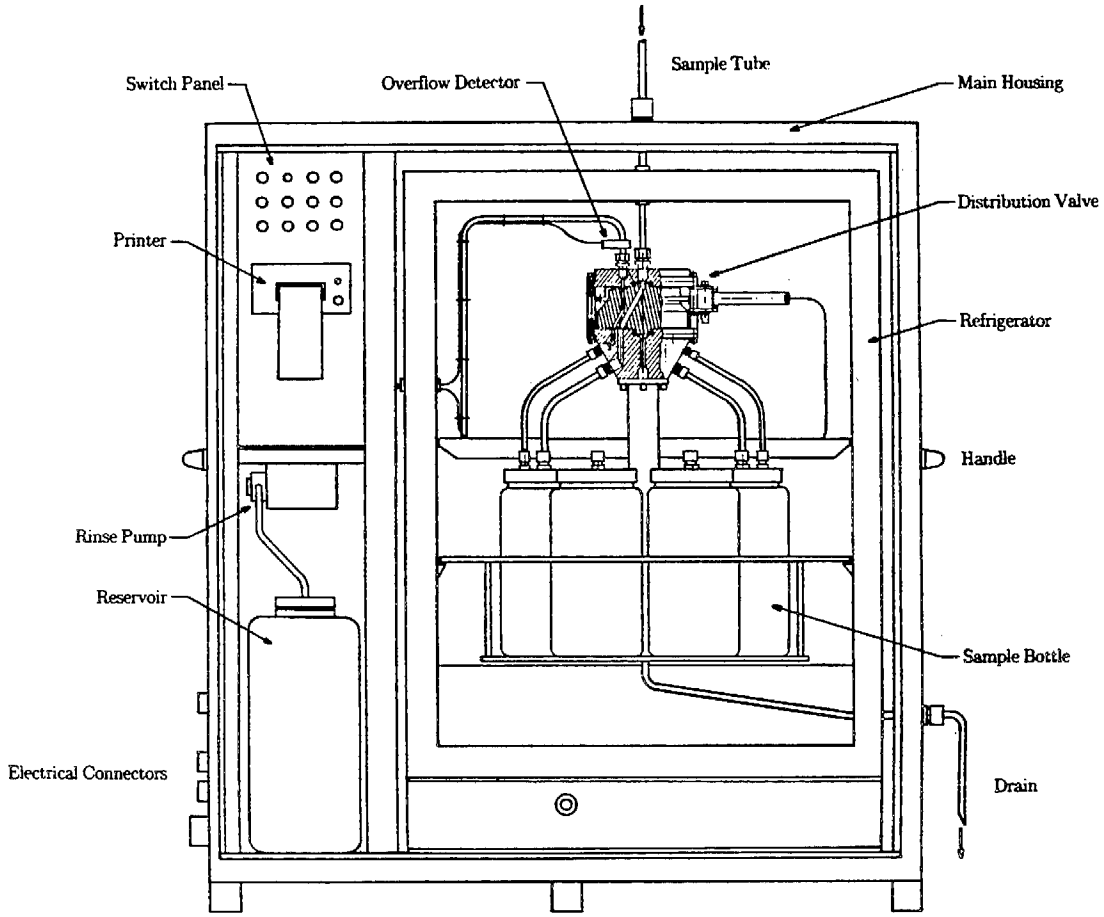

Front View (Doors Removed)

Figure 13. Components of the autosampler. The autosampler controls the Fog Monitoring System and stores the collected samples in a refrigerated compartment. The distribution valve directs the collected fog sample to the appropriate sample bottle.

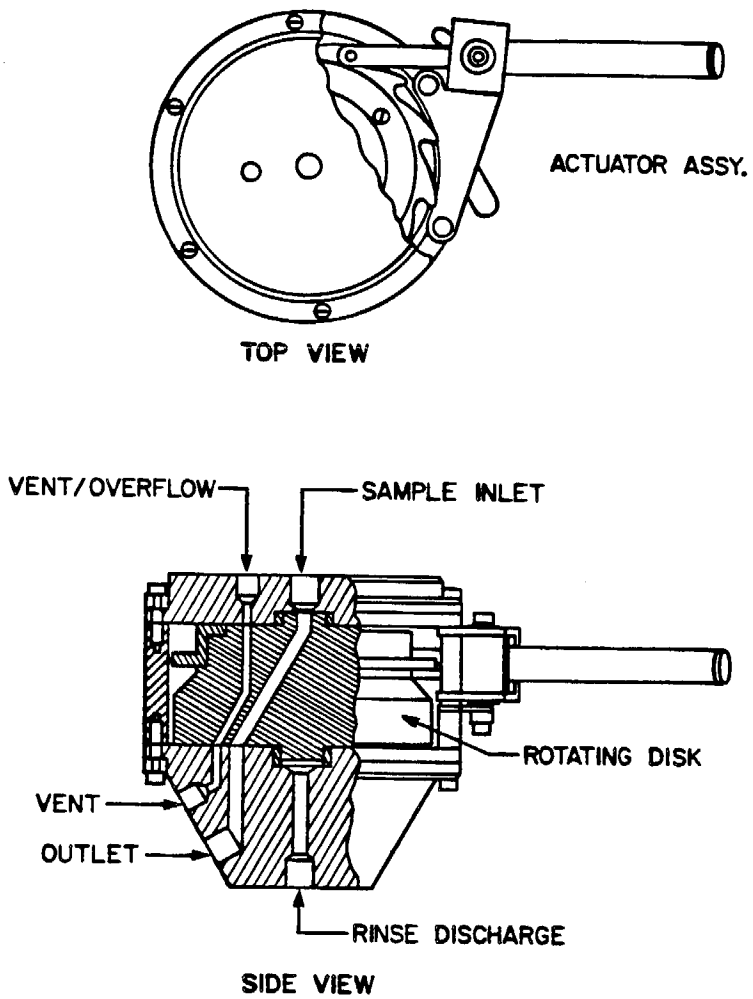

Figure 14. Sample distribution valve. The distribution valve delivers the sample collected by the CASCC2 to the appropriate sample bottle. It also diverts rinse water to the ground during pre– and post–collection rinsing.

WARNING – Turning off the main power will erase the system program.

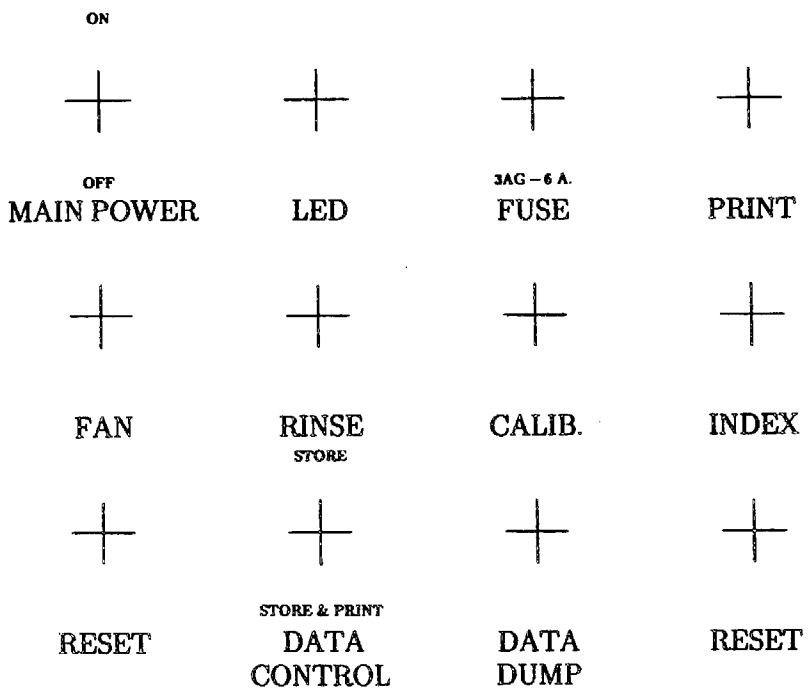

Figure 15. Switch panel layout. These switches are used to configure the Fog Monitoring System, initiate data output, and to operate the system manually.

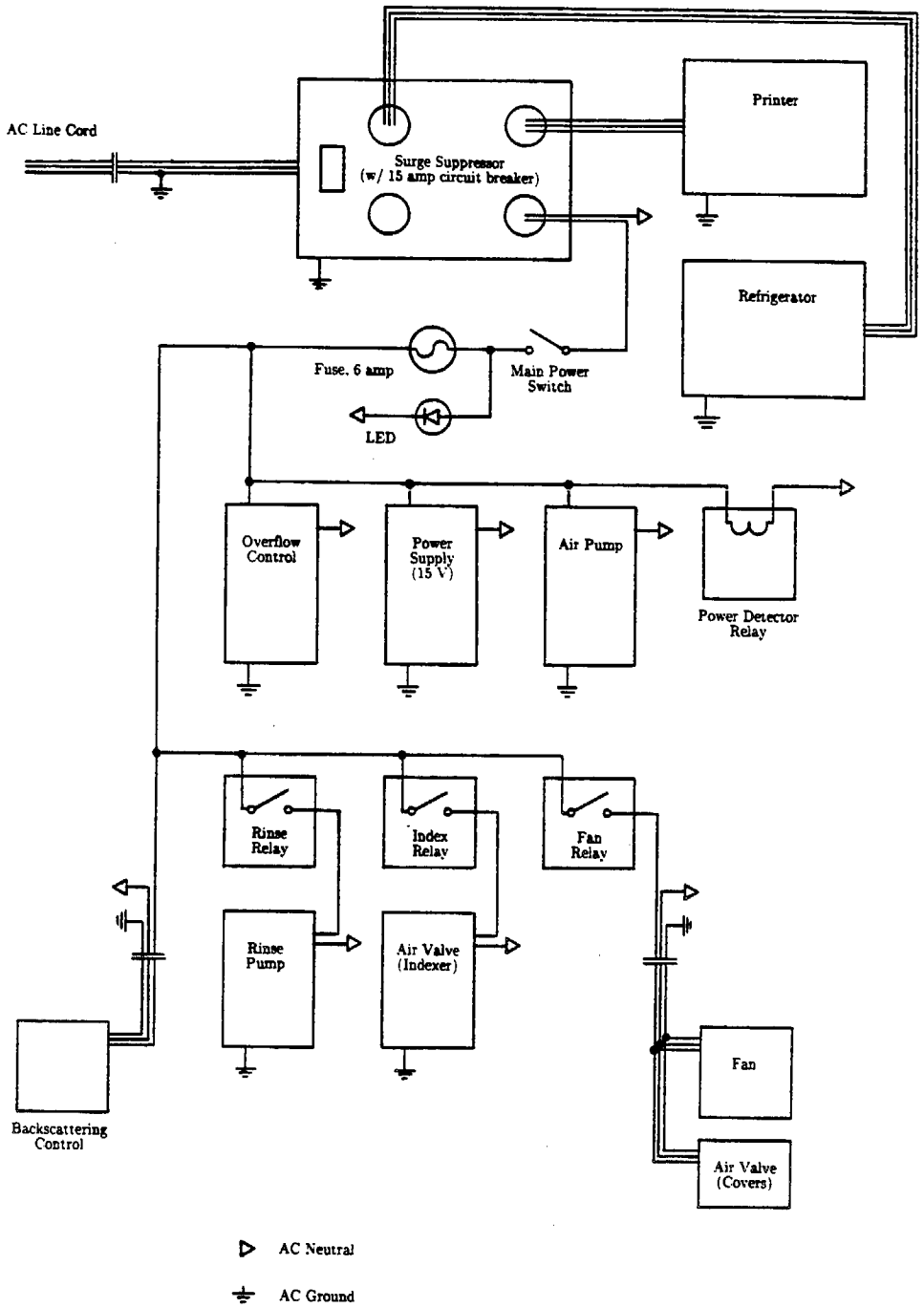

Figure 16. Electrical schematic of the Fog Monitoring System's AC circuitry.

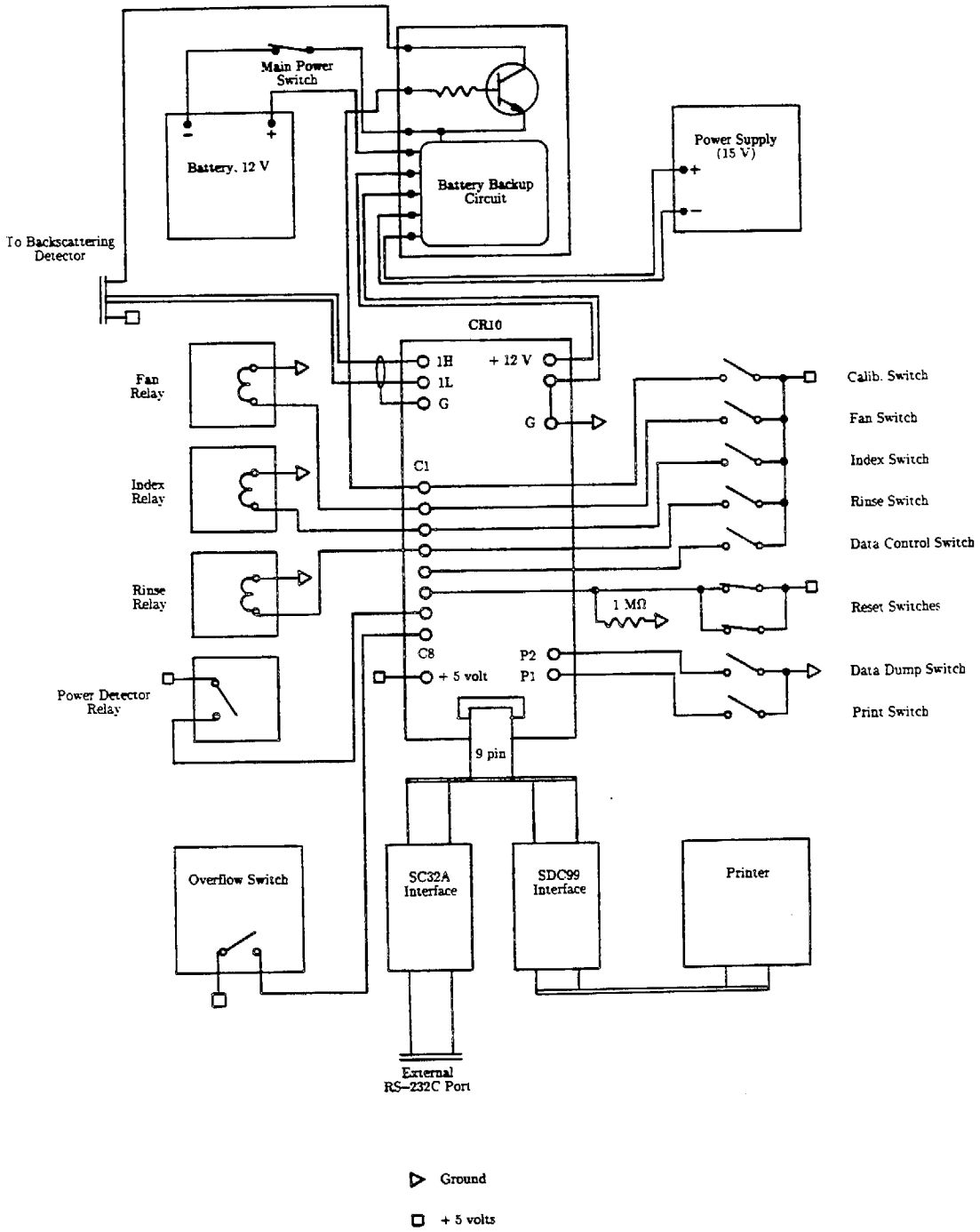

Figure 17. Electrical schematic of the Fog Monitoring System's DC circuitry.

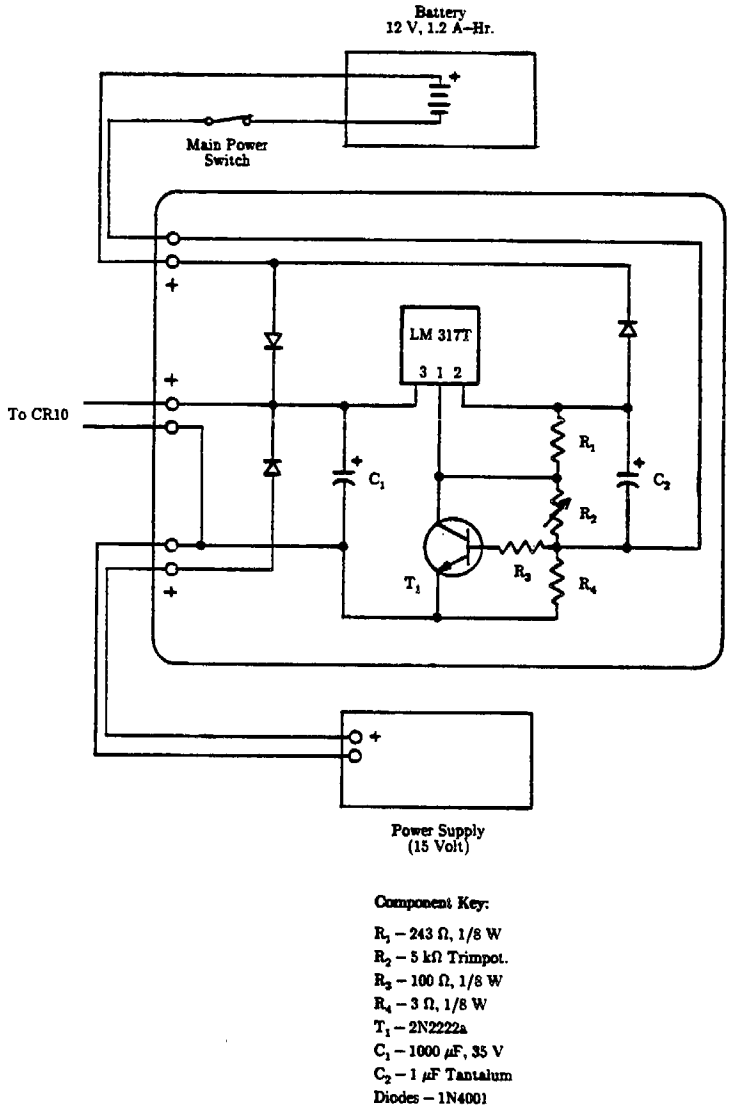

Figure 18. Electrical schematic of the Fog Monitoring System's backup battery charging circuit. This circuit maintains the battery charge when AC power is available and delivers uninterrupted power from the battery to the controller in the event of a power failure.

Appendix A. Collection rate as a function of LWC

Collection Rate, $ml \cdot min^{-1}$	LWC, $ml \cdot m^{-3}$
0.093	0.025
0.116	0.030
0.138	0.035
0.162	0.040
0.186	0.045
0.211	0.050
0.236	0.055
0.262	0.060
0.287	0.065
0.313	0.070
0.339	0.075
0.365	0.080
0.391	0.085
0.417	0.090
0.443	0.095
0.469	0.100
0.494	0.105
0.520	0.110
0.545	0.115
0.571	0.120
0.596	0.125
0.621	0.130
0.646	0.135
0.671	0.140
0.695	0.145
0.720	0.150
0.744	0.155
0.769	0.160
0.793	0.165
0.818	0.170
0.842	0.175
0.866	0.180
0.891	0.185
0.915	0.190
0.939	0.195
0.964	0.200
0.988	0.205
1.013	0.210
1.037	0.215
1.062	0.220
1.087	0.225
1.111	0.230
1.136	0.235
1.162	0.240
1.187	0.245
1.212	0.250
1.237	0.255
1.263	0.260

Collection Rate, $ml \cdot min^{-1}$	LWC, $ml \cdot m^{-3}$
1.289	0.265
1.314	0.270
1.340	0.275
1.366	0.280
1.392	0.285
1.418	0.290
1.444	0.295
1.470	0.300
1.497	0.305
1.523	0.310
1.549	0.315
1.575	0.320
1.601	0.325
1.627	0.330
1.653	0.335
1.679	0.340
1.705	0.345
1.730	0.350
1.756	0.355
1.781	0.360
1.806	0.365
1.831	0.370
1.856	0.375
1.880	0.380
1.905	0.385
1.929	0.390
1.953	0.395
1.977	0.400
2.000	0.405
2.024	0.410
2.047	0.415
2.070	0.420
2.094	0.425
2.117	0.430
2.140	0.435
2.164	0.440
2.188	0.445
2.212	0.450
2.236	0.455
2.261	0.460
2.286	0.465
2.312	0.470
2.339	0.475
2.367	0.480
2.396	0.485
2.426	0.490
2.458	0.495
2.492	0.500

Appendix B. CIT/CARB FMS Maintenance Procedures

1. **Fogwater collector:**

   A. Remove the top cover and remove the three collection cartridges. Place the cartridges into a clean polyethylene tray and wash them with a dilute solution of distilled water and Triton (a surfactant). A soft brush may be used to help remove dirt from the Teflon strands. Be careful not to damage the Teflon coating on the stainless steel cartridges. Rinse the cartridges thoroughly with high–grade distilled water and place them in a second clean polyethylene tray and soak them in fresh distilled water for at least 30 minutes.

   B. Disconnect the upper end of the sample tube and remove the collection trough from the bottom of the collector (four screws) and wash it in a dilute solution of distilled water and Triton. Gently scrub the trough until all visible traces of contamination are removed. Rinse the trough thoroughly with high–grade distilled water.

   C. Reinstall the collection trough and install the mounting screws. Tighten them to 20 in.·lbs. Avoid over–tightening the mounting screws as this will eventually cause the plexiglas collector housing to crack. Be careful not to touch the internal surfaces of the trough while installing it.

   D. Reinstall the three collection cartridges, wearing plastic lab gloves to avoid contaminating them. Replace the top cover and install the mounting screws. Tighten them to no more than 15 in.·lbs. Avoid over–tightening the screws.

   E. Before reconnecting the sample tube, open one flap of the inlet cover and rinse the collector inlet and strands thoroughly with 500 ml of high–grade distilled water. A polyethylene wash bottle with the tip partially removed is recommended to accomplish this rinsing.

   F. Connect the sample tube and tighten it securely.

   G. The rear portion of the collector does not require regular maintenance. If it is malfunctioning or appears to be very dirty, the collector assembly should be removed from the stand and the collector disassembled and cleaned in the laboratory.

2. **Backscattering detector:**

   A. Inspect the sight tubes of the detector and remove any debris.

   B. Check that the ventilation pump is producing a slight flow of air out of the sight tubes.

   C. Test the calibration circuitry of the detector by holding up the "CALIB." switch for 10 seconds and then actuating the "PRINT"

switch. Release both switches and check the printed backscattering level. The value should be within the range of –20 to +20 mV. If it is not, the control module requires adjustment. If the value is off scale (giving a reading of ± 6999 or ± 99999), the control module probably needs replacement.

To adjust the module, remove the rear access port of the backscattering detector. Cover the detector sight tube (left tube when viewing the sight tubes head–on) with the provided cover and rotate the phase adjustment (left screw) until the backscattering value is at 0.0 mV. Do not turn the adjustment screw more than one turn in either direction. Replace the access port cover and lightly tighten its four mounting screws.

D. Check the measured ambient backscattering level by actuating the "PRINT" switch while the sight tubes are unobstructed. If it is not foggy, the measured value should be in the range of –30 to +30 mV. If it is not, repeat the measurement several times. If it is still out of range, check the background level using the method above and adjust accordingly. (Step C.)

3. **Distribution valve:**

A. Disconnect the lower end of the sample tube (inside the refrigerator) from the distribution valve.

B. Disconnect the vent/overflow tube from the distribution valve and place it aside.

C. Remove the sample bottles from the sampler if they are installed. Use the normal sample retrieval protocol.

D. Remove the six upper disk attachment screws (5/32 in. allen wrench) and remove the black upper support ring. Note the position of the top disk relative to the lower part of the valve so that it will be reinstalled correctly.

E. Lift off the upper disk and place it into a clean polyethylene tray. Rinse the inlet fitting and inlet passage with distilled water. A cotton swab may be used to remove accumulated dirt. If the passage is extremely dirty and will not rinse clean, wash the upper disk in a solution of distilled water and Triton. Rinse the disk thoroughly and set it aside on a clean surface.

F. Gently rotate the air cylinder connected to the valve assembly towards you and depress the detent arm. Lift the middle disk out of the valve assembly and place it into a clean polyethylene tray. Be careful not to dislodge the o–rings installed on the middle disk (3 on top, 1 on the bottom). Rinse the disk surfaces and passages with distilled water and, if necessary, use Triton. Rinse the middle disk thoroughly, particularly around the o–rings and through the two passages, and set it aside on a clean surface.

G. The lower disk is normally cleaned while still installed in the refrigerator. First, install the rinse tray to catch any spillage. Clean all of the passages in the lower disk with distilled water and a clean cotton swab. Change the swab frequently. If the lower disk passages are very dirty and/or distilled water will not remove the accumulated dirt, sparingly use a solution of distilled water and Triton on the swab. Rinse the passages and upper surface of the lower disk very thoroughly and wipe up any residual distilled water with a kimwipe. Avoid touching the surfaces after rinsing.

H. While holding the air cylinder forward and depressing the detent arm, install the middle disk. Be sure that the o–rings remain in place. Rotate the middle disk counter–clockwise about half a turn. Release the air cylinder and detent arm.

I. Place the upper disk on top of the valve assembly and orient it so that the vent port is to the left of the sample inlet port. Install the black support ring with the correct side up and tighten the six mounting screws to 40 in.·lbs.

J. Reinstall the sample tube and the vent/overflow tube and tighten the fittings securely.

K. Check that the middle disk rotates freely by actuating the "INDEX" switch. If it rotates very slowly, make sure that the mounting screws are not over–tightened or that one of the o–rings has not become dislodged from its groove.

L. Rinse the entire reassembled valve assembly using the procedure outlined in the normal sampling protocol. (Steps 4 and 5)

M. Remove the rinse tray and wipe up any remaining puddles in the sampler.

4. **Sampling tube, collector to refrigerator:**

A. Inspect the tube for accumulation of a black film on the inner wall. If it is present, rinse the tube with distilled water. If the film will not wash off, remove the tube and replace it with a clean one. Rinse the new tube with distilled water prior to installation.

B. Tighten the sample tube fittings securely.

5. **Sampling tubes, distribution valve to sample bottle:**

A. Inspect the sample and vent tubes for accumulation as above. If the tubes are dirty, remove them and wash them with a solution of distilled water and Triton. A cotton swab may be used to help remove the accumulated dirt inside the tube. Rinse the tubes thoroughly following cleaning. Reinstall the tubes and secure the fittings.

Appendix C. CIT/CARB FMS Site Requirements

1. The terrain surrounding the site should be fairly level so that the ambient wind is level and parallel to the ground.

2. Locate the site away from local sources of contamination such as air conditioners, diesel generators, etc.

3. The area around the site in the path of the prevailing wind during fog events should be free from obstructions (large buildings, trees, etc.).

4. The site should not be located near high energy transmitters such as those used by television and radio stations. Small microwave stations are not usually a problem.

5. The meteorological characteristics of the site should be known (ave. wind speed, ave. wind direction, conditions during fog). This will help the installer position the collector correctly.

6. The Backscattering–Type Fog Detector requires an unobstructed optical path of approximately 20 meters and should be oriented so that the detector is not exposed to direct sunlight. When possible, aim the detector toward the north.

7. The site must have a 117 VAC, 15 amp, grounded, circuit breaker protected power source. (Hard–wire to sampler location, and do not use a ground–interrupt type circuit breaker) Current drain will not exceed 5 amps under most conditions. Stand–by current drain is less than 1 amp.

8. The site must have pressure–regulated dry air, variable from 30 to 80 psi. (An 85 cubic foot cylinder initially at 2000 psi will last several months.)

9. Drainage around the site should be adequate to prevent puddling of water around the base of the sampling equipment. This is very important as it protects the refrigerator from shorting.

10. An 8 foot step ladder (or equivalent) is required for collector maintenance.

11. The collector stand requires three equally spaced guy–wire attachment points, each located about 3 meters from the base of the stand. Two feet long wood 2x4's, held down by several large rocks, may be used to anchor the guy–wires in place if it is not possible to install permanent mounting pads.

12. The housing must be earth–grounded with a heavy–gauge wire and ground spike to avoid damage due to a lightning strike.

Appendix D. CIT/CARB FMS Input Assignments

CHANNEL:	1H,1L	BACKSCATTERING SIGNAL (0–3 VOLT)
	P1	PRINT CURRENT VALUES (WHEN LOW)
	P2	DATA DUMP (WHEN LOW)
	C1	BSCAT. CALIBRATION RELAY CONTROL PORT
	C2	FAN/AIR VALVE RELAY CONTROL PORT
	C3	DISTRIBUTION VALVE RELAY CONTROL PORT
	C4	RINSE PUMP RELAY CONTROL PORT
	C5	DATA CONTROL ("STORE ONLY" WHEN HIGH)
	C6	RESET PROGRAM (WHEN LOW)
	C7	POWER DET. RELAY (AC ON WHEN HIGH)
	C8	OVERFLOW DET. RELAY (O/FLOW WHEN HIGH)

Appendix E. CIT/CARB FMS Control Program, Ver. 1.1

MAIN PROGRAM

```
MODE 1
SCAN RATE = 10 SECONDS
IF FLAG 1 IS LOW, THEN DO...
        IF PORT 7 IS LOW (NO AC), CALL SUBR. 4
        LOOP 20 TIMES
                SET LOC. 1 THRU 20 TO ZERO (INDEXED LOC.)
        END LOOP
        SET FLAG 1 LOW
        SET FLAG 2 LOW
        SET FLAG 3 LOW
        SET FLAG 4 LOW
        SET FLAG 5 LOW
        SET FLAG 6 LOW
        SET FLAG 7 LOW
        SET FLAG 8 LOW
        IF PORT 5 IS HIGH ("STORE ONLY"), SET FLAG 5 HIGH
        SET OUTPUT FLAG HIGH
        SET OUTPUT ID TO 10, F.S. AREA TO 1
        STORE TIME (YEAR, JULIAN DAY, HOUR/MIN.)
        IF FLAG 5 IS LOW, CALL SUBR. 80 (INIT. MESSAGE)
        CALL SUBR. 1 (BSCAT. CALIBRATION)
        SET LOC. 13 TO 35 (BSCAT. THRESHOLD)
        SET FLAG 1 HIGH
END IF

IF PORT 7 IS LOW (NO AC), CALL SUBR. 4
IF PORT 6 IS LOW (RESET), THEN DO...
        SET PORTS 1 THRU 4 LOW (OUTPUT PORTS)
        SET FLAG 1 LOW
        GOTO END OF PROGRAM TABLE
END IF
CHECK FOR P1 PULSE (PRINT CURRENT VALUES)
IF PULSE EXISTS, CALL SUBR. 88
CHECK FOR P2 PULSE (DATA DUMP)
IF PULSE EXISTS, CALL SUBR. 89

SET LOC. 6 TO ZERO
LOOP 100 TIMES
        MEAS. BSCAT. LEVEL (mV), MULT. BY 0.01, PUT INTO LOC. 5
        ADD VALUE IN LOC. 5 TO SUM IN LOC. 6 (100 MEAS. AVE.)
END LOOP
IF BSCAT. ≥ 1000, THEN DO...
        SET BSCAT. TO 1000
        INCREMENT COUNTER 9 BY 1
END IF
IF BSCAT. < –100, THEN DO...
        SET BSCAT. TO –100
        INCREMENT COUNTER 10 BY 1
```

```
END IF
SUBTRACT BKGRD. (LOC. 2) FROM BSCAT. (LOC. 6), PUT BACK INTO
LOC. 6
ADD RESULT TO SUM IN LOC. 7 (1 MIN. SUM)

IF TIME = 1 MINUTE, THEN DO...
      DIVIDE LOC. 7 (BSCAT. SUM) BY 6, PUT RESULT INTO LOC. 8
      SET LOC. 7 TO ZERO
      IF FLAG 7 IS LOW (BOTTLES REMAIN), THEN DO...
            IF LOC. 8 (BSCAT. AVE.) ≥ LOC. 13 (THRESHOLD), THEN DO
                  IF COUNTER 11 < 10 , THEN DO...
                        INCREMENT COUNTER 11 BY 1
                  END IF
                  SET COUNTER 12 TO 10
                  IF FLAG 3 IS LOW (NOT RINSING), THEN DO...
                        SET COUNTER 17 TO ZERO
                  ELSE
                        IF FLAG 2 IS LOW, THEN DO...
                              INCREMENT COUNTER 17 BY 1
                        END IF
                  END IF
            ELSE
                  IF FLAG 2 IS LOW (COLL. OFF), THEN DO...
                        SET COUNTER 11 TO ZERO
                        IF FLAG 6 IS HIGH (4 HR.), THEN DO...
                              INCREMENT COUNTER 17 BY 1
                        END IF
                  ELSE
                        DECREMENT COUNTER 12 BY 1
                        IF COUNTER 12 < 1, THEN DO...
                              SET PORT 2 LOW (COLL. OFF)
                              SET FLAG 2 LOW (COLL. STATUS)
                              SET COUNTER 11 TO ZERO (FOG PRES.)
                              SET COUNTER 17 TO ZERO (4 HR. OFF)
                              SET OUTPUT FLAG HIGH
                              SET OUTPUT ID TO 40, F.S. AREA TO 1
                              STORE TIME (JULIAN DAY, HOUR/MIN.)
                              IF FLAG 5 IS LOW, CALL SUBR. 84
                        END IF
                  END IF
            END IF
      END IF

      IF COUNTER 15 = 0, THEN DO...
            IF COUNTER 17 ≥ 240 (OFF 4 HOURS), THEN DO...
                  IF COUNTER 17 < 241, THEN DO...
                        IF COUNTER 14 (# BOTTLES) < 6, THEN DO...
                              CALL SUBR. 2 (INDEX)
                              INCREMENT COUNTER 14 BY 1
                              SET COUNTER 18 TO ZERO (24 HOUR ON)
                              SET OUTPUT FLAG HIGH
                              SET OUTPUT ID TO 50, F.S. AREA TO 1
                              STORE TIME (JULIAN DAY, HOUR/MIN.)
                              IF FLAG 5 IS LOW, CALL SUBR. 85
```

```
                    IF COUNTER 14 ≥ 6, SET FLAG 7 HIGH
                    SET PORT 4 HIGH (START POST–RINSE)
                    SET FLAG 3 HIGH (RINSE STATUS)
              END IF
        ELSE
              SET PORT 4 LOW (END RINSE)
              SET COUNTER 17 TO ZERO
              SET FLAG 6 LOW (4 HOUR TIMER)
              SET FLAG 3 LOW (RINSE STATUS)
        END IF
    END IF
END IF

IF FLAG 7 IS HIGH (BOTTLES USED UP), THEN DO...
    IF FLAG 8 IS LOW, THEN DO...
        IF FLAG 2 IS HIGH, THEN DO...(O/F ON BOTTLE #6)
              SET PORT 2 LOW (COLLECTOR OFF)
              SET FLAG 2 LOW (COLLECTOR STATUS)
        END IF
        SET PORT 4 HIGH (START POST RINSE)
        SET FLAG 3 HIGH (RINSE STATUS)
        SET COUNTER 17 TO 241
        IF FLAG 5 IS LOW, THEN DO...
              LOOP 8000 TIMES TO DELAY
              END LOOP
              SEND CHARACTERS ("E.O.B.")
              PARAMETER EXTENSION
        END IF
        SET FLAG 8 HIGH
    END IF
ELSE
    IF COUNTER 11 ≥ 10, THEN DO...
        IF FLAG 2 IS LOW (COLLECTOR OFF), THEN DO...
              IF FLAG 3 IS LOW (RINSE OK), THEN DO...
                    SET PORT 4 HIGH (START PRE–RINSE)
                    SET FLAG 3 HIGH (RINSE STATUS)
                    SET FLAG 4 HIGH (RINSE CYCLE)
                    SET COUNTER 15 TO ZERO
                    SET OUTPUT FLAG HIGH
                    SET OUTPUT ID TO 20, F.S. AREA TO 1
                    STORE TIME (JULIAN DAY, HOUR/MIN.)
                    IF FLAG 5 IS LOW, CALL SUBR. 81
              ELSE
                    SET OUTPUT FLAG HIGH
                    SET OUTPUT ID TO 35, F.S. AREA TO 1
                    STORE TIME (JULIAN DAY, HOUR/MIN.)
              END IF
              SET COUNTER 17 TO ZERO (4 HOUR OFF)
              SET FLAG 6 HIGH (4 HOUR)
              SET PORT 2 HIGH (COLLECTOR ON)
              SET FLAG 2 HIGH (COLLECTOR STATUS)
              IF FLAG 4 IS LOW (NOT IN RINSE), THEN DO...
                    IF FLAG 5 IS LOW, CALL SUBR. 83
              END IF
```

```
                    ELSE
                        INCREMENT COUNTER 18 BY 1 (24 HOUR ON)
                        IF COUNTER 18 ≥ 1460, THEN DO...
                            CALL SUBR. 2 (INDEX TO RNS. POSITION)
                            INCREMENT COUNTER 14 BY 1
                            SET OUTPUT FLAG HIGH
                            SET OUTPUT ID TO 60, F.S. AREA TO 1
                            STORE TIME (JULIAN DAY, HOUR/MIN.)
                            IF FLAG 5 IS LOW, CALL SUBR. 86
                            IF COUNTER 14 ≥ 6, SET FLAG 7 HIGH
                            IF FLAG 7 IS LOW, CALL SUBR. 2 (INDEX)
                            RESET COUNTER 18 TO ZERO
                        END IF
                        SET PORT 4 LOW (END RINSE IF RINSING)
                        IF FLAG 4 IS HIGH, THEN DO...
                            INCREMENT COUNTER 15 BY 1
                            IF COUNTER 15 ≥ 20, THEN DO...
                                CALL SUBR. 2 (INDEX TO BOTTLE)
                                SET OUTPUT FLAG HIGH
                                SET ID TO 30, F.S. AREA TO 1
                                STORE TIME (DAY, HOUR/MIN.)
                                IF FLAG 5 IS LOW, CALL SUBR. 83
                                SET FLAG 4 LOW (END RNS CYCLE)
                                SET COUNTER 15 TO ZERO
                            END IF
                        END IF
                    END IF
                END IF
            END IF
        END IF

IF TIME = 15 MINUTES, CALL SUBR. 1 (BSCAT. CALIB.)
IF TIME = 360 MINUTES, SET OUTPUT FLAG HIGH
SET OUTPUT ID TO 2, F.S. AREA TO 1
STORE TIME (JULIAN DAY, HOUR/MIN.)
IF TIME = 60 MINUTES, SET OUTPUT FLAG HIGH
SET OUTPUT ID TO 3, F.S. AREA TO 1
AVERAGE BSCAT. BKGRD. (100 MEAS. AVE.)
AVERAGE BSCAT. (100 MEAS. AVE.)
MAXIMIZE BSCAT. (100 MEAS. AVE. MAX.)
```

SUBROUTINE 1 – CALIBRATION CONTROL

```
LABEL SUBROUTINE 1
SET PORT 1 HIGH (FOR CALIBRATION)
SET LOC. 2 TO ZERO
LOOP 2500 TIMES TO DELAY
END LOOP
LOOP 100 TIMES
    MEAS. BSCAT. BKGRD. (mV), MULT. BY 0.01, PUT INTO LOC. 1
    ADD VALUE IN LOC. 1 TO LOC. 2 (100 MEAS. AVE.)
END LOOP
IF BKGRD. (LOC. 2) ≥ 50, THEN DO...
```

```
        SET BKGRD. (LOC. 2) TO 50
        INCREMENT COUNTER 3 BY 1
END IF
IF BKGRD. (LOC. 2) < –50, THEN DO...
        SET BKGRD. (LOC. 2) TO –50
        INCREMENT COUNTER 4 BY 1
END IF
SET PORT 1 LOW (END CALIBRATION)
LOOP 2500 TIMES TO DELAY
END LOOP
END SUBROUTINE 1
```

SUBROUTINE 2 – DISTRIBUTION VALVE INDEX CONTROL

```
LABEL SUBROUTINE 2
IF PORT 7 IS LOW (NO AC), CALL SUBR. 4
LOOP 2500 TIMES TO DELAY
END LOOP
SET PORT 3 HIGH (INDEX)
LOOP 5000 TIMES TO DELAY
END LOOP
SET PORT 3 LOW
END SUBROUTINE 2
```

SUBROUTINE 4 – AC POWER FAILURE

```
LABEL SUBROUTINE 4
SET PORTS 1–4 LOW
SET FLAG 2 LOW (COLLECTOR STATUS)
SET OUTPUT FLAG HIGH
SET OUTPUT ID TO 200, F.S. AREA TO 1
STORE TIME (JULIAN DAY, HOUR/MIN.)
LOOP EVERY 2 MINUTES UNTIL "EXIT LOOP"
        INCREMENT COUNTER 16 BY 2
        IF PORT 7 IS HIGH, "EXIT LOOP"
END LOOP
SET OUTPUT FLAG HIGH
SET OUTPUT ID TO 210, F.S. AREA TO 1
STORE TIME (JULIAN DAY, HOUR/MIN.)
IF FLAG 5 IS LOW, THEN DO...
        SEND CHARACTERS ("NO AC")
        PARAMETER EXTENSION
        SET OUTPUT FLAG HIGH
        SET OUTPUT ID TO 220, F.S. AREA TO 2
        STORE TIME (JULIAN DAY, HOUR/MIN.)
        SAMPLE LOC. 16 (AC LOSS DURATION)
        ACTIVATE SERIAL OUTPUT
END IF
SET COUNTER 16 TO ZERO
END SUBROUTINE 4
```

SUBROUTINE 80 – INITIAL MESSAGE, DATE, AND TIME

LABEL SUBROUTINE 80
SEND CHARACTERS ("CIT/CARB FMS")
PARAMETER EXTENSION
PARAMETER EXTENSION
END SUBROUTINE 80

SUBROUTINE 81 – PRE–COLLECTION RINSE

LABEL SUBROUTINE 81
SEND CHARACTERS ("RINSE1")
PARAMETER EXTENSION
CALL SUBR. 92
END SUBROUTINE 81

SUBROUTINE 83 – COLLECTOR ON

LABEL SUBROUTINE 83
SEND CHARACTERS ("ON AT")
PARAMETER EXTENSION
CALL SUBR. 92
END SUBROUTINE 83

SUBROUTINE 84 – COLLECTOR OFF

LABEL SUBROUTINE 84
SEND CHARACTERS ("OFF AT")
PARAMETER EXTENSION
CALL SUBR. 92
END SUBROUTINE 84

SUBROUTINE 85 – END EVENT, COLLECTOR OFF 4 HOURS

LABEL SUBROUTINE 85
SEND CHARACTERS ("END EV, RINSE2")
PARAMETER EXTENSION
PARAMETER EXTENSION
CALL SUBR. 92
END SUBROUTINE 85

SUBROUTINE 86 – END EVENT, COLLECTOR ON 24 HOURS

LABEL SUBROUTINE 86
SEND CHARACTERS ("END EV, 24H ON")
PARAMETER EXTENSION
PARAMETER EXTENSION
CALL SUBR. 92
END SUBROUTINE 86

SUBROUTINE 88 – PRINT CURRENT VALUES

```
LABEL SUBROUTINE 88
SET OUTPUT FLAG HIGH
SET OUTPUT ID TO 4, F.S. AREA TO 2
STORE TIME (JULIAN DAYS, HOURS/MIN.)
SAMPLE LOC. 3, 4
SAMPLE LOC. 9, 10
SET OUTPUT FLAG HIGH
SET OUTPUT ID TO 5, F.S. AREA TO 2
SAMPLE LOC. 2
SAMPLE LOC. 6
SAMPLE LOC. 14
ACTIVATE SERIAL OUTPUT
END SUBROUTINE 88
```

SUBROUTINE 89 – DATA DUMP

```
LABEL SUBROUTINE 89
SET OUTPUT FLAG HIGH
SET OUTPUT ID TO 6, F.S. AREA TO 1
STORE TIME (JULIAN DAY, HOUR/MIN.)
SAMPLE LOC. 3, 4 (BKGRD. OFF–SCALE COUNTERS)
SAMPLE LOC. 9, 10 (BSCAT. OFF–SCALE COUNTERS)
ACTIVATE SERIAL OUTPUT (DUMP DATA FROM F.S. AREA 1)
END SUBROUTINE 89
```

SUBROUTINE 92 – SET OUTPUT FLAG

```
LABEL SUBROUTINE 92
SET OUTPUT FLAG HIGH
SET OUTPUT ID TO 1, F.S. AREA TO 2
STORE TIME (JULIAN DAY, HOUR/MIN.)
SAMPLE LOC. 14
ACTIVATE SERIAL OUTPUT
END SUBROUTINE 92
```

SUBROUTINE 98 – SAMPLE OVERFLOW (INTERRUPT)

```
LABEL SUBROUTINE 98
LOOP 8000 TIMES TO DELAY
END LOOP
IF PORT 8 IS HIGH (OVERFLOW), THEN DO...
    IF FLAG 2 IS HIGH, THEN DO...
        IF FLAG 7 IS LOW, THEN DO...
            SET OUTPUT FLAG HIGH
            SET OUTPUT ID TO 500, F.S. AREA TO 1
            STORE TIME (JULIAN DAY, HOUR/MIN.)
            CALL SUBR. 2 (INDEX)
            INCREMENT COUNTER 14 BY 1
            IF FLAG 5 IS LOW, THEN DO...
```

```
                    SEND CHARACTERS ("O/F AT")
                    PARAMETER EXTENSION
                    CALL SUBR. 92
                END IF
                IF COUNTER 14 ≥ 6, SET FLAG 7 HIGH
                IF FLAG 7 IS LOW, CALL SUBR. 2 (INDEX)
                IF FLAG 7 IS HIGH, THEN DO...
                    LOOP 8000 TIMES TO DELAY
                    END LOOP
                    CALL SUBR. 85
                END IF
            END IF
        END IF
    END IF
END SUBROUTINE 98
```

Appendix F. CIT/CARB FMS Control Statements

MAIN PROGRAM

```
1     P91 21,30
2     P91 57,4
3     P87 0,20
4     P30 0,1,1—
5     P95
6     P86 21
7     P86 22
8     P86 23
9     P86 24
10    P86 25
11    P86 26
12    P86 27
13    P86 28
14    P91 45,15
15    P86 10
16    P80 01,10
17    P77 1110
18    P91 25,80
19    P86 1
20    P30 5,1,13
21    P86 11
22    P95
23    P91 57,4
24    P91 56,30
25    P20 9999,0000
26    P86 21
27    P86 0
28    P95
29    P3 1,1,2,19,1,0
30    P89 19,3,1,88
31    P3 1,2,2,20,1,0
32    P89 20,3,1,89
33    P30 0,1,6
34    P87 0,100
35    P2 1,5,1,5,0.01,0
36    P33 5,6,6
37    P95
38    P89 6,3,1000,30
39    P30 10,2,6
40    P32 9
41    P95
42    P89 6,4,–100,30
43    P30 –1,2,6
44    P32 10
45    P95
46    P35 6,2,6
47    P33 6,7,7
48    P92 0,1,30
```

49	P37 7,0.1667,8
50	P30 0,1,7
51	P91 27,30
52	P88 8,3,13,30
53	P89 11,4,10,30
54	P32 11
55	P95
56	P30 1,1,12
57	P91 23,30
58	P30 0,1,17
59	P94
60	P91 22,30
61	P32 17
62	P95
63	P95
64	P94
65	P91 22,30
66	P30 0,1,11
67	P91 16,30
68	P32 17
69	P95
70	P94
71	P34 12,–1,12
72	P89 12,4,1,30
73	P86 52
74	P86 22
75	P30 0,1,11
76	P30 0,1,17
77	P86 10
78	P80 01, 40
79	P77 110
80	P91 25,84
81	P95
82	P95
83	P95
84	P95
85	P89 15,1,0,30
86	P89 17,3,240,30
87	P89 17,4,241,30
88	P89 14,4,6,30
89	P86 2
90	P32 14
91	P30 0,1,18
92	P86 10
93	P80 01,50
94	P77 110
95	P91 25,85
96	P89 14,3,6,17
97	P86 44
98	P86 13
99	P95
100	P94
101	P86 54
102	P30 0,1,17

103	P86 26
104	P86 23
105	P95
106	P95
107	P95
108	P91 17,30
109	P91 28,30
110	P91 12,30
111	P86 52
112	P86 22
113	P95
114	P86 44
115	P86 13
116	P30 24.1,1,17
117	P91 25,30
118	P87 0,8000
119	P95
120	P98 11
121	P63 13,69,46,79,46,66,46,00
122	P95
123	P86 18
124	P95
125	P94
126	P89 11,3,10,30
127	P91 22,30
128	P91 23,30
129	P86 44
130	P86 13
131	P86 14
132	P30 0,1,15
133	P86 10
134	P80 01,20
135	P77 110
136	P91 25,81
137	P94
138	P86 10
139	P80 01,35
140	P77 110
141	P95
142	P30 0,1,17
143	P86 16
144	P86 42
145	P86 12
146	P91 24,30
147	P91 25,83
148	P95
149	P94
150	P32 18
151	P89 18,3,1460,30
152	P86 2
153	P32 14
154	P86 10
155	P80 01,60
156	P77 110

```
157    P91 25,86
158    P89 14,3,6,17
159    P91 27,2
160    P30 0,1,18
161    P95
162    P86 54
163    P91 14,30
164    P32 15
165    P89 15,3,20,30
166    P86 2
167    P86 10
168    P80 01,30
169    P77 110
170    P91 25,83
171    P86 24
172    P30 0,1,15
173    P95
174    P95
175    P95
176    P95
177    P95
178    P95
179    P92 0,15,1
180    P92 0,360,10
181    P80 01,2
182    P77 110
183    P92 0,60,10
184    P80 01,3
185    P71 1,2
186    P71 1,6
187    P73 1,00,6
```

SUBROUTINE 1

```
1      P85 1
2      P86 41
3      P30 0,1,2
4      P87 0,2500
5      P95
6      P87 0,100
7      P2 1,5,1,1,0.01,0
8      P34 1,2,2
9      P95
10     P89 2,3,50,30
11     P30 5,1,2
12     P32 3
13     P95
14     P89 2,4,–50,30
15     P30 –5,1,2
16     P32 4
17     P95
18     P86 51
19     P87 0,2500
```

```
20    P95
21    P95
```

SUBROUTINE 2

```
22    P85 2
23    P91 57,4
24    P87 0,2500
25    P95
26    P86 43
27    P87 0,5000
28    P95
29    P86 53
30    P95
```

SUBROUTINE 4

```
31    P85 4
32    P20 9999,0000
33    P86 22
34    P86 10
35    P80 01,200
36    P77 110
37    P87 12,0
38    P34 16,2,16
39    P91 47,31
40    P95
41    P86 10
42    P80 01,210
43    P77 110
44    P91 25,30
45    P98 11
46    P63 13,78,79,32,65,67,00,00
47    P86 10
48    P80 02,220
49    P77 110
50    P70 1,16
51    P96 21
52    P95
53    P30 0,1,16
54    P95
```

SUBROUTINE 80

```
55    P85 80
56    P98 11
57    P63 13,67,73,84,47,67,65,82
58    P63 66,32,70,77,83,10,13,00
59    P95
```

SUBROUTINE 81

```
60    P85 81
61    P98 11
62    P63 13,82,73,78,83,69,49,00
63    P86 92
64    P95
```

SUBROUTINE 83

```
65    P85 83
66    P98 11
67    P63 13,79,78,32,65,84,00,00
68    P86 92
69    P95
```

SUBROUTINE 84

```
70    P85 84
71    P98 11
72    P63 13,79,70,70,32,65,84,00
73    P86 92
74    P95
```

SUBROUTINE 85

```
75    P85 85
76    P98 11
77    P63 13,69,78,68,32,69,86,13
78    P63 82,73,78,83,69,50,00,00
79    P86 92
80    P95
```

SUBROUTINE 86

```
81    P85 86
82    P98 11
83    P63 13,69,78,68,32,69,86,13
84    P63 50,52,72,32,79,78,00,00
85    P86 92
86    P95
```

SUBROUTINE 88

```
87    P85 88
88    P86 10
89    P80 02,4
90    P77 110
91    P70 2,3
```

```
92    P70 2,9
93    P86 10
94    P80 02,5
95    P70 1,2
96    P70 1,6
97    P70 1,14
98    P96 21
99    P95
```

SUBROUTINE 89

```
100   P85 89
101   P86 10
102   P80 01,6
103   P77 110
104   P70 2,3
105   P70 2,9
106   P96 21
107   P95
```

SUBROUTINE 92

```
108   P85 92
109   P86 10
110   P80 02,1
111   P77 110
112   P70 1,14
113   P96 21
114   P95
```

SUBROUTINE 98

```
115   P85 98
116   P87 0,8000
117   P95
118   P91 48,30
119   P91 12,30
120   P91 27,30
121   P86 10
122   P80 01,500
123   P77 110
124   P86 2
125   P32 14
126   P91 25,30
127   P98 11
128   P63 13,79,47,70,32,65,84,00
129   P86 92
130   P95
131   P89 14,3,6,17
132   P91 27,2
133   P91 17,30
```

134 P87 0,8000
135 P95
136 P86 85
137 P95
138 P95
139 P95
140 P95
141 P95

Appendix G. CIT/CARB FMS Variable Descriptions

FLAGS:	1	INITIALIZATION LOOP CONTROL
	2	COLLECTOR ON/OFF STATUS
	3	RINSE ON/OFF STATUS
	4	RINSE CYCLE CONTROL (20 MIN.)
	5	"STORE ONLY" DATA CONTROL
	6	COLL. OFF (4 HR. TIMER CONTROL)
	7	BOTTLE STATUS (ALL FULL)
	8	BOTTLES FULL MESSAGE CONTROL
INPUT LOCATIONS:	1	BACKSCATTERING BACKGROUND LEVEL
	2	100 MEAS. AVE. BACKGROUND
	3	ERROR COUNTER FOR BKGRD. $\geq$ 50 mV
	4	ERROR COUNTER FOR BKGRD. $<$ –50 mV
	5	BACKSCATTERING LEVEL
	6	100 MEAS. AVE. BACKSCATTERING
	7	1 MIN. BSCAT. SUM, CORRECTED
	8	1 MIN. BSCAT. AVE., CORRECTED
	9	ERROR COUNTER FOR BSCAT. $\geq$ 1000 mV
	10	ERROR COUNTER FOR BSCAT. $<$ –100 mV
	11	FOG PRESENCE COUNTER
	12	FOG ABSENCE COUNTER
	13	BACKSCATTERING THRESHOLD (35 mV)
	14	BOTTLE COUNTER (# OF BOTTLES USED)
	15	RINSE CYCLE COUNTER (20 MIN.)
	16	AC POWER LOSS DURATION COUNTER
	17	END EVENT COUNTER (4 HOUR)
	18	CONTINUOUS COLL. COUNTER (24 HOUR)
	19	P1 PULSE ("PRINT CURRENT VALUES")
	20	P2 PULSE ("DATA DUMP")

Appendix H. CIT/CARB FMS Output Identification

OUTPUT ID:

1 TIME AND BOTTLE NO. (SUBR. 92)
PRINTS: TIME (JULIAN DAY, HOUR/MIN.)
BOTTLE NO. (SEE PRINTER)

2 TIME (EVERY 6 HOURS)
STORES: TIME (JULIAN DAY, HOUR/MIN.)

3 HOUR AVERAGES
STORES: AVE. BSCAT. BACKGROUND LEVEL
AVE. BACKSCATTERING LEVEL
MAX. BACKSCATTERING LEVEL

4 CURRENT TIME
PRINTS: TIME (JULIAN DAY, HOUR/MIN.)
COUNTS OF BKGRD. $\geq$ 50 mV
COUNTS OF BKGRD. $<$ –50 mV
COUNTS OF BSCAT. $\geq$ 1000 mV
COUNTS OF BSCAT. $<$ –100 mV

5 CURRENT VALUES OF BKGRD., BSCAT.
PRINTS: BSCAT. BACKGROUND LEVEL, mV
BACKSCATTERING LEVEL, mV
NO. OF BOTTLES USED

6 ERROR COUNTS, END OF DATA DUMP
PRINTS: TIME (JULIAN DAY, HOUR/MIN.)
COUNTS OF BKGRD. $\geq$ 50 mV
COUNTS OF BKGRD. $<$ –50 mV
COUNTS OF BSCAT. $\geq$ 1000 mV
COUNTS OF BSCAT. $<$ –100 mV

10 INITIALIZATION LOOP
STORES: TIME (YEAR, DAY, HOUR/MIN.)

20 PRE–RINSE
STORES: TIME (JULIAN DAY, HOUR/MIN.)

30 COLLECTOR ON, W/RINSE (BEGIN EVENT)
STORES: TIME (JULIAN DAY, HOUR/MIN.)

35 COLLECTOR ON, NO RINSE (MID–EVENT)
STORES: TIME (JULIAN DAY, HOUR/MIN.)

40 COLLECTOR OFF
STORES: TIME (JULIAN DAY, HOUR/MIN.)

50 COLLECTOR OFF 4 HOURS, INDEX (END EVENT)
STORES: TIME (JULIAN DAY, HOUR/MIN.)

60	COLLECTOR ON 24 HOURS (CUMUL.), INDEX	
	STORES:	TIME (JULIAN DAY, HOUR/MIN.)
200	AC POWER FAILURE	
	STORES:	TIME (JULIAN DAY, HOUR/MIN.)
210	AC POWER RESTORED	
	STORES:	TIME (JULIAN DAY, HOUR/MIN.)
220	AC POWER LOSS (SEE LABELLED OUTPUT)	
	PRINTS:	TIME (JULIAN DAY, HOUR/MIN.) DURATION OF LOSS, MINUTES
500	SAMPLE OVERFLOW	
	STORES:	TIME (JULIAN DAY, HOUR/MIN.)

LABELLED OUTPUT: (PRINTER)	"CIT/CARB FMS" (UPON RESET)	
	PRINTS:	MESSAGE ONLY
	"RINSE1"	(PRE–RINSE)
	PRINTS:	OUTPUT ID, NO. 1 TIME (JULIAN DAY, HOUR/MIN.) NO. OF BOTTLE <u>LAST</u> USED
	"ON AT"	(COLLECTOR ON)
	PRINTS:	OUTPUT ID, NO. 1 TIME (JULIAN DAY, HOUR/MIN.) NO. OF BOTTLE <u>LAST</u> USED
	"OFF AT"	(COLLECTOR OFF)
	PRINTS:	OUTPUT ID, NO. 1 TIME (JULIAN DAY, HOUR/MIN.) NO. OF BOTTLE <u>LAST</u> USED
	"END EV" "RINSE2"	(END OF EVENT, OFF 4 HOURS)
	PRINTS:	OUTPUT ID, NO. 1 TIME (JULIAN DAY, HOUR, MIN.) NO. OF BOTTLE JUST FINISHED
	"END EV" "24H ON"	(END OF EVENT, ON 24 HOURS)
	PRINTS:	OUTPUT ID, NO. 1 TIME (JULIAN DAY, HOUR/MIN.) NO. OF BOTTLE JUST FINISHED
	"E.O.B."	(END–OF BOTTLES)
	PRINTS:	MESSAGE ONLY
	"O/F AT"	(OVERFLOW OF BOTTLE)
	PRINTS:	OUTPUT ID, NO. 1 TIME (JULIAN DAY, HOUR/MIN.) NO. OF BOTTLE THAT O/FLOWED

"NO AC"	(AC POWER FAILURE)
PRINTS:	OUTPUT ID, NO. 1
	TIME (JULIAN DAY, HOUR/MIN.)
	DURATION OF LOSS, MINS.

Appendix I. CIT/CARB FMS Sampling Protocol

Weekly sample collection:

1. Open the main housing door and press down on the "FEED" switch on the printer to feed the printer paper out several lines. Next, actuate the "PRINT" switch on the main switch panel. This will cause the printer to record the current time, the number of sample bottles that have been used, the background backscattering level, the current backscattering level, and the number of error counts (indicating backscattering measurements out of range). When the printer is finished, feed the printer paper out several lines.

2. Unscrew the six 2–liter sample bottles (leave caps with tubes in place), cap them, and label each bottle with the appropriate bottle number (the number is located on the bottle cap and on the bottle rack next to each sample bottle). Place the bottles and the system blank from the previous week (See step 7.) in a refrigerated container as soon as possible.

3. Actuate the "DATA DUMP" switch. This will cause the printer to list an expanded version of the pertinent data for the sampling period such as when the sampling period started, when fog was present, and when the distribution valve rotated to a new sample bottle. Also included are half–hour averages of the backscattering levels and the values of the four error counters. Release the switch.

4. Install the rinse tray and actuate the "RINSE" switch to begin rinsing the collector and distribution valve.

5. After about 100 ml of rinse water has flowed down through the distribution valve into the rinse tray, actuate the "INDEX" switch to rotate the distribution valve to the next position. Repeat until each of the twelve valve positions have been rinsed with about 100 ml of distilled water, then turn off the "RINSE" switch.

6. After rinsing, remove the rinse tray, place it in a plastic bag, and store it for the following week.

7. Rotate the distribution valve so that it will direct the sample to one of the two front bottles. Actuate the "RINSE" switch again and collect about 60 ml of rinse water from the appropriate sample tube in a clean wide–mouth 125 ml HDPE sample bottle. This will serve as a measure of the cleanliness of the system. Label this bottle as "system blank" and record the site ID and the date. Cap the bottle and place it in the bottom of the refrigerator. The blank is to be left in the refrigerator until the following week's sample pickup.

8. Wait 10 minutes to allow any remaining rinse water to drain from the system.

9. Shake out any remaining distilled water from the six new clean 2–liter sample bottles and place them in the sampler. Install the caps onto the bottles, taking care not to cross–thread them. Ensure that the sample bottle caps are screwed on tightly.

10. Check the operation of the collector covers and fan by actuating the "FAN" switch. The covers should open completely and the fan should come on. Turn off the switch and check that the covers close completely.

11. Rotate the distribution valve so that the indexing marks line up (two red lines). This ensures that the sampler will deliver the first sample to the correct bottle.

12. Actuate the two "RESET" switches simultaneously and hold them up for about 10 seconds to reset the system controller. If the "DATA CONTROL" switch is set to "STORE AND PRINT", the printer will print "CIT/CARB FMS", signaling that the system has been reset. (Note: Be sure you have printed the data from the sampling period first! See step 4.)

13. Check the supply of distilled rinse water and refill it if required. Use high–grade distilled de–ionized water (D^2H_2O). The rinse water should be changed at least every two weeks even if it is not used up. To remove the reservoir, loosen the hose fitting (not the vent line) and unscrew the reservoir cap. The reservoir can now be removed. Be careful not to contaminate the pickup tube while it is removed from the reservoir.

14. Check the supply of pressurized air. Record the amount remaining in the cylinder in the logbook. If the pressure in the cylinder is below 300 psi, the cylinder should be replaced. Check the supply pressure (to the stand). It should be 55 to 60 psi. Note the supply pressure in the log book and then adjust it if required.

15. Close the door of the housing and lock it. Visually inspect all components of the system for damage and note any irregularities that are observed in the log book.

16. Measure the volume of each sample by weighing each sample bottle. Record the weight of each bottle in the logbook.

17. Pour off a small amount of sample from the main sample for the pH measurement to avoid contamination of the main sample. Measure the pH of each sample following CARB protocol and record the values in the logbook.

18. Prepare six clean 125 ml HDPE bottles to receive the laboratory portion of the newly collected fog samples by shaking out any residual distilled water. Pour each collected sample into a 125 ml bottle and label the bottle with the site ID, the date, and the sample number as recorded on the 2–liter sample bottle. Discard any remaining sample in the 2–liter bottle.

19. Ship the samples and the system blank from the previous week in an insulated, refrigerated carton to the main laboratory for further analysis. Include enough cold packs to ensure that the samples will remain cold until delivery. Ship the empty, used 2–liter sample bottles to the main laboratory in a separate carton for cleaning.

20: If laboratory cleaning of the sample bottles is not possible, rinse the bottles 3 times with high–grade distilled de–ionized water (D^2H_2O) and then fill them with D^2H_2O to the top. Cap the bottles and store them in a clean shaded place until the following week.

WARNING: Do not turn off the "MAIN POWER" switch at any time. Doing so will turn off power to the microprocessor–based controller / data–logger and will erase the system program. If the system is to be moved, unplug the AC line cord, leaving the "MAIN POWER" switch in the "ON" position. A backup battery located in the main housing will supply uninterrupted power to the controller for several days.

Appendix J. CIT/CARB FMS Replacement Parts List

Collector Assembly

1.	Fan	Nidec/Torin TA700 part # A30050
2.	Air cyl., rear cover	Boston Gear part # E15–05SC1–1010
3.	Air cyl., front cover	Boston Gear part # E15–05PC1–1010
4.	Rinse nozzle	Bete part # WL–0.25 60X
5.	Tube fitting	Cole Parmer part # N–06385–40
6.	Sample tube, Teflon	Cole Parmer part # N–06406–74

Backscattering Detector

1.	Control module	Skan–a–Matic part # T43007
2.	IR Source	Skan–a–Matic part # L43004
3.	Photodetector	Skan–a–Matic part # P43004
4.	Relay, 5 V coil	ITT part # RZ–5

Stand

1.	Air valve	Allied Products part # V3W792D–1–1BDPT
2.	Metering valve	Nupro part # SS–SS4
3.	Shoulder screw	W.M. Berg part # PZ–42–3
4.	Teflon bushing	W.M. Berg part # B6–21

Main Housing / Autosampler

1.	Computer / Data logger	Campbell Scientific part # CR10 w/ wiring panel
2.	Computer interface	Campbell Scientific part # SC32A
3.	Printer interface	Campbell Scientific part # SDC99
4.	Printer	Memodyne part # MAP–20SAC
5.	Printer paper	Memodyne part # PT–20B1
6.	Surge suppressor	TrippLite part # Isobar IB 4
7.	Power supply, 15 V	Lambda Electronics part # LUS–9A–15
8.	Backup battery, 12 V	Elpower Technacell part # EP 1212
9.	Overflow detector	Skan–a–Matic part # S19051
10.	Overflow control	Skan–a–Matic part # R46133
11.	Module socket	Skan–a–Matic part # 770050
12.	Air regulator	Boston Gear part # EN42110
13.	Air valve, actuator	Boston Gear part # E201UBR101E
14.	Metering Valve	Nupro part # SS–SS2
15.	Air cyl., actuator	Parker part # 0.56 NSR 1.50
16.	Relay, power detector	Guardian part # 1330P–2C–120A
17.	Relay socket	Guardian part # 1330–1 ST

18.	Triac relays	Guardian part # MSSR–1B–10
19.	Air pump	KNF Neuberger, Inc. part # N 72 MV I
20.	Rinse pump, Viton	KNF Neuberger, Inc. part # ND100 TTP
21.	Reservoir, 9 liter	Cole Parmer part # N–06032–20
22.	Inlet filter, reservoir	Cole Parmer part # N–02915–08
23.	Refrigerator	Marvel Division, Dayton Walther part # 6.1 cu. ft.
24.	Sample bottle, 2 liter	VWR part # 16059–046
25.	O–rings, distrib. valve (Viton)	Cal–State Seal part # 2–012 part # 2–015 part # 2–029 part # 2–035

00000850
ASSET