CLINICAL PILOT STUDY TO DEVELOP SENSITIVE MARKERS FOR DETECTING THE HEALTH EFFECTS OF ACIDIC ATMOSPHERES

FINAL REPORT

PREPARED FOR THE CALIFORNIA AIR RESOURCES BOARD

CONTRACT NUMBER: A933-112
TRC NUMBER 1640999

TRC
TRC Environmental Corporation

RA
576
A3
R6
1993

CLINICAL PILOT STUDY TO DEVELOP SENSITIVE MARKERS FOR DETECTING THE HEALTH EFFECTS OF ACIDIC ATMOSPHERES

FINAL REPORT

PREPARED FOR THE CALIFORNIA AIR RESOURCES BOARD

CONTRACT NUMBER: A933-112
TRC NUMBER 1640999

LIBRARY
CALIFORNIA AIR RESOURCES BOARD
P.O. BOX 2815
SACRAMENTO, CA 95812

PRINCIPAL INVESTIGATORS:
L. Jack Roger, Ph.D., D.A.B.T.
Susanne Becker, Ph.D.

TRC Environmental Corporation
6320 Quadrangle Drive, Suite 100
Chapel Hill, NC 27514

CO-INVESTIGATORS:
Robert B. Devlin, Ph.D.
Hillel S. Koren, Ph.D.
D.H. Horstman, Ph.D.

Health Effects Research Laboratories
Clinical Research Branch
U.S. Environmental Protection Agency
Research Triangle Park, NC 27711

February 5, 1993

ACKNOWLEDGEMENTS

The authors thank Ms. J. Quay, Ms. J. Soukup, Mr. D. Tulis, Mr. P. Ives, Ms. C. Webb, and Ms. S. Harder for expert technical support in this study. We also thank Dr. P. Mannos for performing the bronchoalveolar lavages with the aid of Ms. V. Johnson, R.N., and Ms. V. Taylor, P.A.

DISCLAIMER

Although the research described in this article has been funded in part by the United States Environmental Protection Agency contract 68-D0-0110 to TRC Environmental Corporation, it has not been subject to the Agency's review and therefore does not necessarily reflect the views of the Agency, and no official endorsement should be inferred.

TABLE OF CONTENTS

LIST OF FIGURES iv

LIST OF TABLES v

ABSTRACT vi

STATEMENT OF SIGNIFICANCE vii

BODY OF REPORT 1
- INTRODUCTION AND BACKGROUND 1
- MATERIALS AND METHODS 5
  - Subjects 5
  - Exposure systems 5
  - Exposure protocol 10
  - Bronchoalveolar lavage (BAL) 12
  - Biochemical measurements of BAL components 12
  - In vitro experiments 13
  - Statistical analysis 14
- RESULTS 15
  - Nitric Acid Chamber Concentrations 15
  - Immunological measurements 16
  - Pulmonary function and symptom measurements 19
  - In vitro experiments 28
- DISCUSSION 31
- CONCLUSIONS 35

REFERENCES 36

LIST OF FIGURES

Figure 1. Exposure Chamber Air Flow 7
Figure 2. Modified NO-NO_x Analyzer for Real-Time Measurement of HNO_3 . . . 9
Figure 3. Markers of Lung Injury or Inflammation 21
Figure 4. Phagocytosis of Unopsonized *Candida Albicans* by Human Alveolar Macrophages 22
Figure 5. Phagocytosis of Opsonized *Candida Albicans* by Human Alveolar Macrophages 23
Figure 6. Production of RSV by Infected Alveolar Macrophages 33
Figure 7. Production of Superoxide by Human Alveolar Macrophages 34

LIST OF TABLES

Table 1. Subject Characteristics 6
Table 2. Cell Recovery and Differential Cell Counts in the BAL of Subjects Exposed to Air and HNO_3 17
Table 3. Markers of Lung Injury or Inflammation 18
Table 4. Measures of Macrophage Function 20
Table 5. SRAW Measured During Exposure to Clean Air and to HNO_3 24
Table 6. FVC Measured During Exposure to Clean Air and to HNO_3 25
Table 7. FEV_1 Measured During Exposure to Clean Air and to HNO_3 26
Table 8. Ratio of FEV_1 to FVC Measured During Exposure to Clean Air and to HNO_3 27
Table 9. In Vitro Testing of Macrophage Function: Phagocytosis of Candida Albicans 29
Table 10. In Vitro Testing of Macrophage Function: RSV Release and Superoxide Production 30

ABSTRACT

Nitric acid (HNO_3) is a common component of air pollution possibly associated with the epidemiological observations that acid atmospheres may cause or aggravate pulmonary disease. Because studies of classical pulmonary mechanics have generally not shown effects of acid atmospheres except at high acid concentrations, other endpoints, such as pulmonary clearance and pulmonary immune effects need to be examined. In this reported research we studied human pulmonary immune responses to inhaled nitric acid as represented by two types of sensitive and biologically meaningful markers of immunological effects -- inflammation and macrophage function.

We exposed nine healthy non-smoking volunteers once to HNO_3 vapor (200 $\mu g/m^3$, 0.08 ppm), and once to filtered air in random order with natural (unencumbered) breathing, for two hours with 100 minutes of moderate exercise (ventilation rate of 39 liters/minute). Pulmonary function (spirometry and airway resistance) were measured as were subjective symptoms of response. Bronchoalveolar lavage (BAL) was performed 18 hours after exposure and the fluid was analyzed for indicators of airway injury and inflammation. The alveolar macrophages (AM) were tested for phagocytosis of *Candida albicans* and for susceptibility to infection with respiratory syncytial virus (RSV).

The exposure to HNO_3 did not change pulmonary function (spirometry and airway resistance) nor measures of symptoms. Compared to BAL from air-exposed subjects, there were no significant increases in protein, LDH, fibronectin, PGE_2, C3a, alpha-1-antitrypsin, or in polymorphonuclear phagocytes (PMN), in the BAL from HNO_3-exposed subjects. This indicates that HNO_3 did not cause permeability changes, cell damage, or inflammation in the lung. In contrast, there was a significant increase in the phagocytic activity of AM. Phagocytosis of both unopsonized and serum-opsonized *Candida albicans* was increased by 85% (unopsonized) versus 24% (opsonized). Furthermore, AM from HNO_3-exposed subjects showed increased resistance to infection with RSV and released 70% less RSV than AM from air-exposed subjects. Superoxide production by AM was reduced in subjects after HNO_3 exposure compared to that after air exposure.

The results of this study indicate that HNO_3 at 0.08 ppm does not cause acute injury in the lung nor responses suggestive of inflammation. Likewise, it is clear that in vivo exposure to HNO_3 did not result in an "immunological" activation of the alveolar macrophages, although they were activated to some extent as evidenced by increased phagocytosis and response to RSV infection. Further investigations into the generality of these observations both with HNO_3 and other acid air pollutants deserve attention.

STATEMENT OF SIGNIFICANCE

Acute exposure of healthy human volunteers to HNO_3 vapor at 0.08 ppm for two hours with intermittent moderate exercise does not result in changes in a number of lung function endpoints, which are affected by the oxidant air pollutant ozone. Inflammation in the lung does not occur, since no neutrophils or inflammatory mediators are detected in the lavage fluid, suggesting that this air pollutant does not cause damage of the airways. However, the increase in certain alveolar macrophage functions, such as phagocytosis and antiviral activity and the decrease in superoxide producing ability, suggests that HNO_3 does affect the integrity of the lung. Alveolar macrophages have a number of functions which were not tested in this study, among them the release of various enzymes and growth factors known to regulate lung structure. These functions may also be affected by acute HNO_3 exposure.

Since this is the first study in which macrophage functions have been used as endpoints of HNO_3 effects, either in animals or humans, the data will need to be reproduced and the battery of endpoints of macrophage function expanded. In addition to adding further subjects to the present exposure protocol, an animal model should be established which closely mimics the human exposures. In the animals, the long-term implications of HNO_3-macrophage stimulation could be investigated.

BODY OF REPORT

INTRODUCTION AND BACKGROUND

It has long been recognized that acids are common components of air pollution, with two of the principal acids in ambient air being sulfuric acid (H_2SO_4) and nitric acid (HNO_3). In typical ambient air, they are present as microscopic aerosols (H_2SO_4) or vapors (HNO_3) and in varying amounts depending on their sources, meteorology and transport phenomena (Seinfeld, 1989). In ambient air, H_2SO_4 has been recorded at daily averaged concentrations as high as 60 $\mu g/m^3$ and hourly concentrations as high as 800 $\mu g/m^3$ (Lioy and Lippmann, 1986; Bates, 1990). Likewise, HNO_3 vapor has been measured in ambient air at daily averaged concentrations as high as 0.026 ppm (65 $\mu g/m^3$) and hourly concentrations as high as 0.08 ppm (200 $\mu g/m^3$) (US EPA, 1982). The irritancy potential of inhaled acids seems best related to "acidity," and, more specifically, to titratable H^+ concentration (Last et al., 1986; Fine et al., 1987; Balmes et al., 1989). Thus, H_2SO_4 is generally more irritating than the ammonia-neutralized acids NH_4HSO_4 and $(NH_4)_2SO_4$.

The epidemiology of air pollution indicates that acid atmospheres may cause or aggravate pulmonary disease (Thurston et. al., 1989; Bates and Sizto, 1989; Lippmann, 1989). Epidemiological studies are, of course, derived from real-world exposures, and have the advantage of examining effects in all types of persons (e.g., the young, aged or diseased), but the interpretations of causation are frequently weakened by the presence of other real-world pollutants (such as ozone) and imprecise exposure assessment. Historically, several important air pollution episodes (e.g., Donora, PA in 1948; London, England in 1952) involving high particulate levels caused increased morbidity and death (NRC, 1979; Lippmann, 1989). Continuing reanalysis of the data from these episodes now suggests that London mortality was more strongly associated with acid aerosol concentrations than with smoke or SO_2 (Thurston et al., 1989). Recent studies have begun to examine possible effects of acid atmospheres on school children (Dassen et al., 1986) and children at summer camp (Raizenne et al., 1987, abstract), but the analyses to date do not permit attribution of effects to the acidic components of the pollution. Overall it is concluded that there is highly suggestive but not compelling evidence from epidemiological studies that ambient acids cause or aggravate adverse pulmonary effects.

In the experimental laboratory setting, studies of the health effects of air pollutants for many years have generally focused on changes in classical, macro-scale pulmonary "function," that is, pulmonary mechanics. This includes such measures as airway resistance (RAW and SRAW), forced vital capacity (FVC), and forced expiratory volume in the first second (FEV_1). For example, numerous studies on healthy volunteers and on persons with compromised lung function (e.g., asthmatics) have clearly demonstrated that ozone, sulfur dioxide, and nitrogen dioxide can all cause acutely reduced lung function as evidenced by reduced pulmonary vital capacity and/or increased airway resistance. The adverse effects are observed at concentrations near, or only a few fold greater than, ambient levels, and are

greatly worsened by exercise (which increases ventilation and alters pulmonary deposition patterns).

Controlled human exposures to acidic atmospheres have been generally to sulfuric acid and partially neutralized sulfates. Exposures of normal subjects to sulfuric acid aerosols have shown little if any effects on pulmonary mechanics (FEV_1 FVC, RAW) at concentrations less than 500 $\mu g/m^3$ (Hackney et al., 1989; Utell and Morrow, 1986; Aris et. al., 1991). Studies of pulmonary mechanics in asthmatics have yielded conflicting results, but overall it appears that asthmatics are more sensitive to sulfuric acid aerosol than normal subjects (Utell, 1985; Folinsbee, 1989). Utell et al (1983) reported a decrease in airway conductance (i.e., an increase in airway resistance) after young asthmatics inhaled H_2SO_4 for 16 minutes at 450 $\mu g/m^3$ but not after inhalation of 100 $\mu g/m^3$. Koenig et al. (1983) reported decreased FEV_1 after adolescent asthmatics inhaled 100 $\mu g/m^3$ H_2SO_4 during moderate exercise. Spengler et al. (1989) have recently reported an interesting calculation of delivered doses in these two studies. They conclude that the 450 $\mu g/m^3$ concentration in Utell et al. (1983) and the 100 $\mu g/m^3$ concentration in Koenig et al. (1983) -- which both caused effects -- were actually roughly equivalent in terms of delivered dose of aerosol H^+ions.

Although it has long been recognized that nitric acid is a component of polluted atmospheres, there have been only a few controlled studies of the effects of nitric acid vapor on animals or human volunteers. This is partially due to the technical difficulties of measuring HNO_3 in air. In the last 5 to 10 years these technical problems have been better resolved and a few studies performed.

Regarding animal studies, Peters and Hyatt (1986) exposed dogs to a mist of HNO_3 by nebulizing 1% HNO_3 liquid and having the anesthetized dogs inhale the mist. (The concentration of inhaled HNO_3 was not measured.) After exposure for 2 hours/day, every other day for 4 weeks, they observed reduction in small airway pulmonary function and, upon autopsy, widespread tissue inflammation. Abraham and co-workers (1982) studied the pulmonary effects of 1.6 ppm nitric acid vapors in normal and allergic sheep exposed for 4 hours. There was no bronchoconstriction observed; in fact, they reported a statistically significant reduction in airways resistance in both normal and allergic sheep. They observed no changes in airways reactivity to aerosolized carbachol in the normal sheep. There was, however, a 40-60% increase in reactivity to carbachol in the allergic sheep 24 hours after exposure. The transient reduction in airways resistance could be interpreted as an improvement in pulmonary function; alternatively, the subsequent increase in airways reactivity in the allergic sheep suggests an increase in sensitivity of the airways to inhaled materials. Kleinman et al (1989) exposed rats for 4 hours to ozone (0.6 ppm) and NO_2 (2.5 ppm), and to a "fog" containing a mixture of ozone (0.6 ppm), NO_2 (2.5 ppm), and 0.8 ppm HNO_3 produced by chemical reactions. They observed significant cellular inflammation and oxidant toxicity upon exposure to the mixture, and speculated that the HNO_3 may have caused the increased effects.

Regarding human studies, only three studies of the pulmonary effects of HNO_3 in humans have been reported. Balmes et al (1989) studied brochoconstrictive effects in 12 asthmatics of an "acid fog" containing HNO_3 and H_2SO_4. The subjects inhaled increasing amounts of the fog by mouthpiece until airway resistance was doubled. They concluded that the HNO_3 and the H_2SO_4 had equivalent potency on the basis of acidity for causing bronchoconstriction. In other words, it appeared that the amount of H^+ (acid) per se was important, and not the type of acid. Koenig and her co-workers recently reported two studies of the effects of HNO_3 vapors in human volunteers (1989a, 1989b). In the first, a preliminary study, Koenig (1989a) examined the effects of HNO_3 (0.05 ppm) inhaled by mouthpiece on 9 adolescent asthmatics in a 40 minute exposure that included a 10 minute exercise period. They reported a 3% decrease in FEV_1 and a 16% decrease in total respiratory resistance compared to the changes caused by exercise in clean air alone. In a more recent study, Koenig (1989b) exposed 9 more adolescent asthmatics to 0.057 ppm HNO_3 inhaled by mouthpiece with a 30 minute exercise period. They observed no effects on pulmonary function nor reports of symptoms. This finding of no effects is in contrast to the effects seen in the earlier preliminary study (1989a) despite the longer exercise period (30 minutes) of this second study. Koenig suggested that differences in medication used by the different asthmatics may have resulted in the different responses.

Because studies of classical pulmonary mechanics have generally not shown effects of acid atmospheres except at high acid concentrations, other endpoints, such as pulmonary clearance, have been explored (Schlesinger, 1986). Animal studies had previously shown that mucociliary clearance could be reduced by inhalation of acids, with H_2SO_4 being more potent than partially neutralized sulfates (e.g., $NH_4H_2SO_4$). Reduced clearance suggests a decrease in pulmonary defense functions serving to rid the lungs of foreign matter. Studies in humans have proven to be technically difficult to perform and sometimes difficult to interpret. For example, tracheobronchial mucociliary clearance appears to be reduced after inhalation of 917 $\mu g/m^3$ H_2SO_4 (Spektor et al, 1985), but may be increased in a transient manner after inhalation of low acid concentrations (Leikauf et al, 1981).

A few studies have addressed lung immune responses to pollutant exposures on a cellular or biochemical level (Schlesinger, 1987; Graham, 1989). For example, phagocytic function of alveolar macrophages was increased when H_2SO_4 was mixed with high NO_2, and decreased when mixed with low NO_2 (Schlesinger, 1987).

In this reported research, we studied human pulmonary immune responses to inhaled nitric acid as represented by two types of sensitive and biologically meaningful markers of immunological effects: inflammation and macrophage function. Inflammation is important to examine because it is known to be a first step in the acute response to inhalation of irritants and is known to be a causative factor in the development of chronic pulmonary disease. Pulmonary macrophages are the first line of lung defense against inhaled microbes, and reduced macrophage function is an indication of increased susceptibility to infection. In this study we used biomarkers of inflammation and macrophage function that were

observed to be changed after exposure of human volunteers to a relatively low concentration of ozone (0.10 ppm) (Koren et. al., 1989).

We also tested for possible changes in pulmonary function as measured by spirometry and plethysmography. Lastly, we examined in a very preliminary manner an acidified-medium in vitro lung immune cell model.

MATERIALS AND METHODS

Subjects

Healthy non-smoking volunteers (eight males, one female), 20-31 years of age, served as subjects for this study (Table 1). The first screening procedure for each subject included a Minnesota Multiphasic Personality Inventory, medical history, physical examination, routine hematologic tests (SMA-20 and CBC with differential), and epicutaneous prick tests using 0.001 cc of 1:1000 (weight per volume) of each antigen extract of a battery of 16 antigens common to this area. Female subjects had a pregnancy test performed at this time and on the morning before each exposure. Unless contraindicated by the results of the general physical examination and blood analysis, subjects returned for an examination specifically related to acceptability for bronchoscopy. This included having a 10 ml blood sample drawn for a test of coagulation and a PA and lateral chest x-ray. Subjects were excluded for a history of asthma, allergic rhinitis, and chronic respiratory disease or cardiac disease. Testing was delayed if they had a recent acute respiratory illness, and subjects were asked to avoid exposure to air pollutants such as tobacco smoke and paint fumes.

Exposure systems

Chambers. Exposures were conducted in a 4.0 m x 6.0 m x 3.2 m stainless steel chamber (Strong, 1978; Glover et al., 1981). The chamber air is recirculated (rather than "single pass") with a continuous partial exhaust and replacement with new air and pollutant (Figure 1). The volume of the chamber and the air ducts is about 6200 ft^3 (175m^3) with a main air flow through the chamber of 8000 ft^3/minute (CFM) (225m^3/minute). The chamber make-up air was about 1200 CFM (34m^3/minute) with 1200 CFM simultaneously being purged from the system.

Exposures to clean air were to filtered ambient air, while exposures to HNO_3 were to filtered ambient air with HNO_3 added as described below. The chamber was also monitored for NO, SO_2, and O_3; the concentrations of these gases were routinely 0.02 ppm or less. Because of continuous reconditioning and recirculation of the chamber air through high efficiency particle filters, the total particle mass with three persons in the chamber was routinely less than 3 $\mu g/m^3$ with 10^5 particles/m^3.

Nitric Acid Generation. The nitric acid generator included a computer-controlled peristaltic pump ("Rainin Rabbit+") pumping controlled amounts of concentrated nitric acid (J.T. Baker, ultrapure) through a sprayer onto a hot glass surface. A computer was used to provide feedback control of the nitric acid concentration in the chamber by changing the flow of the acid onto the surface. The glass surface was the bottom of a glass container sitting on a hot plate. The vaporized nitric acid was swept out of the container by a stream of dry nitrogen at about a 1 CFM into about 100 CFM of the chamber make-up air stream, through a glass bowtie mixer, and then center-injected into the pre-chamber main air stream.

TABLE 1. SUBJECT CHARACTERISTICS*

SUBJECT NUMBER	AGE (years)	HEIGHT (cm)	WEIGHT (kg)	FAMILY HISTORY DATA†	SKIN TEST DATA‡
1	20	178	73	-	-
2	22	183	84	-	-
3	22	186	84	-	-
4	25	193	71	+ Note a	1
5	21	175	71	+ Note b	-
6	24	162	61	-	1
7	34	180	70	-	-
8	31	172	83	+ Note c	3
9	23	180	91	-	3

*Clinical data were obtained by physical examination or reported by subject.
† Family history of asthma or hay fever; + indicates family history.
Note a: father has hay fever;
Note b: mother has hay fever;
Note c: mother has "allergies".
‡ Number of skin-test positive reactions (number of wheals 3 mm or more larger than response to vehicle).

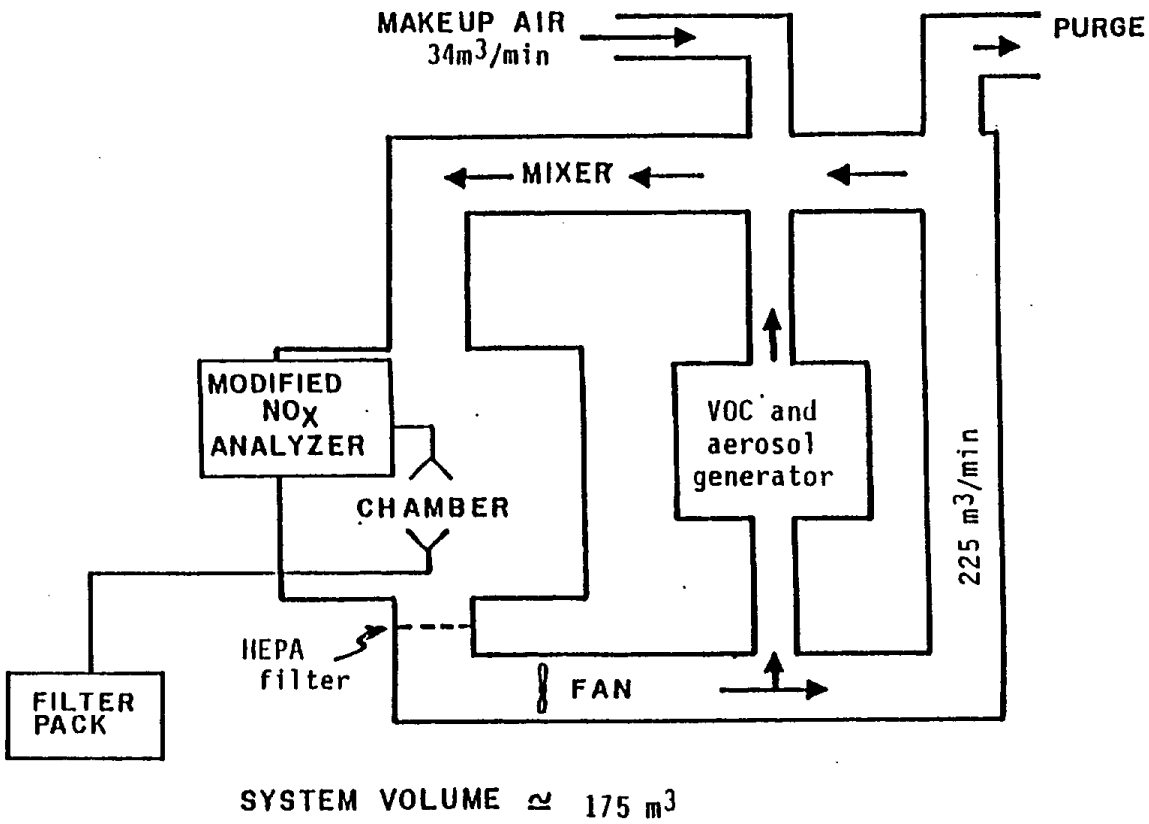

Figure 1. Exposure Chamber Air Flow

Nitric Acid Monitoring. Continuous, real-time monitoring of the nitric acid concentrations in the chamber was achieved using a Monitor Labs (Lear Siegler) Model 8840 mounted in the chamber and modified according to method of Joseph and Spicer (1978) and Spicer et al. (1982) (Figure 2). The Model 8840, a dual channel design with two reaction cells, uses the chemiluminescent reaction of NO and O_3 to measure the concentration of NO. The analyzer measures other nitrogen species, including nitric acid, by converting them into NO using a molybdenum converter heated to approximately 325°C. Measurement of nitric acid utilizes the quantitative and selective absorption of nitric acid onto nylon filters (Gelman, Nylasorb). As shown in Figure 2, the sample air stream passes through a Teflon particle pre-filter and is then is spilt into two streams outside of the instrument. The first stream is passed through a nylon filter, which removes all of the nitric acid vapor; the remaining gases pass through the internal molybdenum converter and then into the reaction cell. The other sample stream is passed through an additional external molybdenum converter and then to the reaction cell. Since the only difference between the two sample streams is the removal of nitric acid by the nylon filter, the difference between the outputs is the nitric acid concentration. Because nitric acid absorbs or adsorbs on many surfaces, this instrument was placed in the chamber to minimize length of the sample line. In fact, we observed that our standard NO-NO_x analyzers (not in the chamber) did not measure any increase in nitrogen species during a nitric acid exposure, indicating that the nitric acid was being removed from the air stream upon passing through the normal sample lines. This effect has not be observed with any other pollutants used in this chamber, including ozone, which is also very reactive.

The NO-NO_x analyzer was calibrated by standard calibration methods used for unmodified NO-NO_x analyzers using a known concentration of NO in nitrogen. The analyzer was calibrated with a multipoint calibration in the morning before use and again the next day to reveal any changes in the calibration over the exposure period. This NO calibration would reveal and/or correct for leaks and problems with the reaction cells or electronics, but it would not correct for the converter efficiencies and the nitric acid removal efficiency of the nylon filter. However, Joseph and Spicer (1978) demonstrated nearly 100% conversion of HNO_3 to NO in a molybdenum converter operated at the specified temperature, and nearly 100% removal of HNO_3 by nylon filters.

The NO-NO_x analyzer was also calibrated against a known amount of HNO_3 produced by a high-emission permeation tube (Vici Metronics, Santa Clara, CA). This calibration was compared to the results of the standard NO-based calibration. The analyzer was operated with and without the Teflon particle filter, and the HNO_3 calibration was performed after various periods of "conditioning;" that is, after various periods of passing HNO_3 through the system to "passivate" the system components. We observed that calibrations of the modified analyzer using NO and using HNO_3 from the permeation tube were different by only 3%. Furthermore, we observed that the instrument's Teflon particle filter provided by Monitor Labs reduced the amount of HNO_3 measured by 23% compared to the amount expected, based on the certified emission rate of the permeation tube.

FIGURE 2. MODIFIED $NO-NO_X$ ANALYZER FOR REAL-TIME MEASUREMENT OF HNO_3

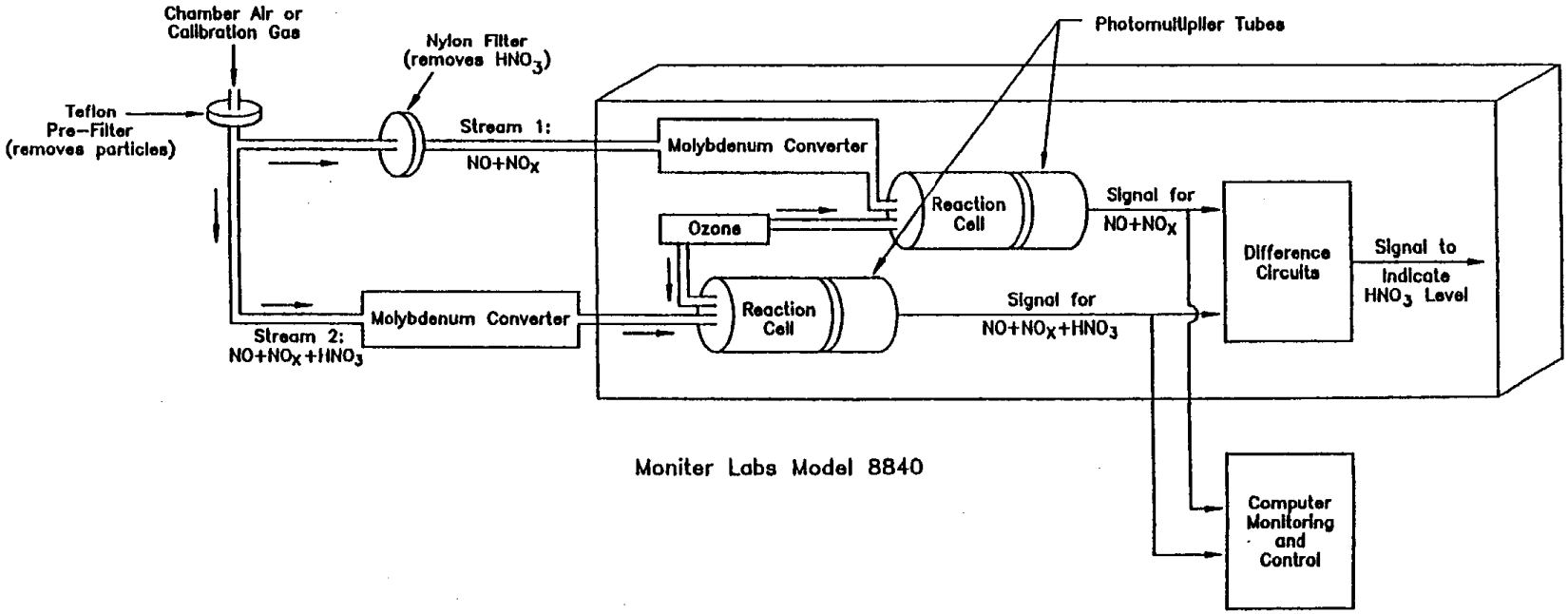

In addition to using the modified NO-NO_x analyzer, duplicate 2-hour integrated samples of the chamber air were collected on nylon filters during the exposure period. These filter packs consisted of a Teflon filter (to remove particles) and three nylon filters (Gelman, Nylasorb) in a train. The amount of nitrate on each of the filters was determined chemically by EPA Method 300 and compared with the average concentration values (corrected for pressure and temperature) as measured by the modified NO-NO_x analyzer. Spiked samples of measured amounts of HNO_3 on clean filters were also analyzed. We observed that there was frequently a "breakthrough" of HNO_3 onto the second nylon filter in the train of about 40% of the total HNO_3 recovered; the amounts of HNO_3 on the third nylon filter were between 10% and negligible. The values obtained for the duplicate samples were routinely within ±5% of each other, and the values obtained from the spiked samples were routinely within ±5% of expected values.

Exposure protocol

Training. During the training session, subjects were informed of the purpose, procedures, and potential risks of the experiment, and each signed a statement of informed consent approved by the University of North Carolina School of Medicine Committee on the Protection of the Rights of Human Subjects. During training, subjects learned to perform pulmonary function tests (spirometry and plethysmography) and to walk on the treadmill and ride the bicycle ergometer. The speed and elevation of the treadmill walking and the resistance to bicycle pedaling were adjusted for each subject to produce a stabilized minute ventilation (V_E) normalized for body surface area of 21 L/(minute x m^2 of body surface area).

Pre-Exposure Procedures. On an exposure day, the subject arrived about 45 minutes prior to exposure and had a preliminary examination including pulse, blood pressure, and subjective evaluation of any pulmonary symptoms. Female subjects had a pregnancy test performed, and were asked information about their current menstrual cycle to determine if there was any reason to suspect a pregnancy. If there were indications of change of general health status, that day's exposure was rescheduled. The subject then brushed his or her teeth and drank lemonade to reduce the levels of oral ammonia produced by bacteria in the mouth. [Ammonia is produced in the oro-nasal airways and can be reduced by brushing the teeth or by drinking lemonade (Koenig, 1989b). This reduction in ammonia minimizes the possibility of neutralization of inhaled nitric acid.]

Chamber Exposure. The subject (or pair of subjects) then entered the chamber and was exposed to filtered air or to 0.08 ppm (200 $\mu g/m^3$) HNO_3 for 2.0 hours with natural, i.e., unencumbered breathing, except for two minutes during each exercise period in which subjects breathed on a mouthpiece for measurements of ventilation rate. The order of exposures to air and HNO_3 was randomized and exposures were double blind. The chamber temperature and relative humidity were continuously monitored and maintained at 20 ± 0.2°C and 30-35% RH, respectively. Subjects were exposed in pairs when possible.

Treadmill and Bicycle Exercise. Upon entering the chamber, the subject exercised for a total of 100 minutes in two cycles of 25 minutes on the treadmill followed by 25 minutes on the bicycle, followed by 10 minutes of rest. This use of treadmill and bicycle allowed us to run two subjects during the same exposure period, alternating one subject on the treadmill and the other on the bicycle. The treadmill speed and elevation and the bicycle resistance were intended to produce a V_E normalized for body surface area of 21 L/minute x m^2. In most subjects, this was about 36-42 L/minute. [In healthy subjects, a treadmill speed of 3.0 to 3.4 mph (moderate to brisk walk rate) and elevation of 3% to 4% produces this ventilation with a heart rate ranging between 100 and 150 beats/minute]. Similar exercise levels were achieved at a bicycle work rate of 60-90 watts. For the group, exercise V_E averaged 38.5±2.9 liter/minute over all exercise periods. There were no differences in ventilation rates between the air and HNO_3 exposures.

Heart rate and one-lead electrocardiogram were monitored continuously during the exposure. If the subject's heart rate approached 180 beats/minute (about 90% predicted maximal heart rate), the speed and elevation were reduced. Minute ventilation, tidal volume (V_T), and respiratory frequency (f) were measured by having the subject breathe through a pneumotachometer. At this time, inspired and expired gases were also monitored at the mouth for the calculation of oxygen consumption (V_{O2}) and carbon dioxide production (V_{CO2}).

Pulmonary Function Testing. Pulmonary function tests were performed in a separate testing room just before entering the exposure chamber, and in the exposure chamber just after the exercise was completed. Airway resistance (RAW) and thoracic gas volume (V_{tg}) were measured in a body plethysmograph (CPI Model 2000TB) at a panting frequency of 1.5 HZ according to a modification (Hazucha et al., 1983) of the method of DuBois et al. (1956). Specific airway resistance (SRAW) was calculated as the product of RAW and V_{tg}; measurements were made in duplicate and their average was used for statistical analyses. FVC and FEV_1 were calculated from forced expiratory maneuvers performed on a 12-liter CPI dry seal spirometer. Measurements were made in duplicate and the largest FVC and FEV_1 were used.

Symptom Questionnaire. Subjects' symptoms were assessed before exposure and after the first exercise period, and again after the exposure. The symptom questionnaire was presented to the subjects on a computer terminal. It queried the presence and severity of symptoms known to be associated with pollutant exposure (cough, pain upon deep inspiration, dry mouth or throat, sore throat, phlegm produced, shortness of breath, chest discomfort, wheeze, and anxiety). In addition, the presence and severity of symptoms considered as shams (sweating, headache, eye irritation, and dizziness), as well as the detection of odor in the chamber, were evaluated. Subjects were asked to score their awareness of each symptom as none (symptom not present), trace (symptom barely detectable), mild (symptom present but not annoying), moderate (symptom present and somewhat annoying), or severe (symptom present and very annoying or painful). For

purposes of quantification a score of 0 was assigned to none, 1 to trace, 2 to mild, 3 to moderate, and 4 to severe.

Bronchoalveolar lavage (BAL)

BAL was performed 18 to 20 hours following the exposure protocol as described earlier (Koren et. al., 1989). There is some latitude for the time of bronchoscopy, since an inflammatory response with monocyte and lymphocytic infiltrate is well underway at 18 hours as demonstrated in animals (Hu et al., 1982; Hatch et al., 1986) and humans exposed to ozone (Graham et al., 1988). The time between successive BALs ranged from 3 to 17 weeks; this minimized the possibility of carryover of non-specific effects due to the BAL per se from one BAL to the next (Von Essen et. al., 1991). All subjects received atropine (0.5 mg) to reduce oral and bronchial secretions. At their option, subjects could also receive intramuscular meperidine (Demerol) and promethazine (Phenergan). Only subject #8 received these medications; he received 50 mg Demerol and 25 mg Phenergan before the bronchoscopy following his HNO_3 exposure, but not the air exposure. Electrocardiographic monitoring was maintained throughout the procedure. The nose and pharynx were anesthetized with 4% lidocaine solution. A cannula was placed in one nostril and oxygen administered at an appropriate rate (usually 22 L/minute).

The flexible fiberoptic bronchoscope was then passed through a nostril, anesthetized nasopharynx, and the vocal cords into the trachea and bronchus under topical anesthesia. A maximum of 30ml of 2% lidocaine was used. Once the bronchoscope was in place in a 4th-6th order bronchus, 60 ml of sterile normal saline was slowly injected from a syringe through the bronchoscope channel. The same syringe was used to gently aspirate the saline, which then contained bronchoalveolar cells and fluids. This procedure was repeated five more times so that a total of 300 ml of normal saline was instilled. Recovery of the injected fluid was routinely 50%-80%. The procedure was repeated in the right middle lobe. Previous tests ascertained that this volume of fluid was necessary to get a sufficient number of cells for our assays.

Biochemical measurements of BAL components

Samples from the BAL were refrigerated immediately after aspiration and centrifuged at 300xg for 10 minutes at 4°C. Supernatants from the first two aliquots were pooled for analysis of BAL fluid components. Some fluid was used immediately for enzyme analysis, and the remainder was frozen and stored at -70°C. Cells from the aliquots were pooled, washed twice with RPMI 1640 supplemented with 20 μg/ml gentamicin, and used immediately for the various assays. Cell viability exceeded 85% as determined by the trypan blue dye exclusion test.

Cell differentials were performed on cytocentrifuge preparations stained with a modified Wright stain (Leukostat, Fisher Scientific). At least 400 cells per slide were counted and evaluated. Protein levels in the BAL were determined with a Bio Rad Protein Assay kit

(BioRad, Richmond, CA), following the manufacturer's instructions. Lactate dehydrogenase (LDH) activity was measured using a kit available from Sigma Chemical Company (St. Louis, MO). The procedure was modified to allow 0.75 ml of lavage fluid to be assayed using a more concentrated substrate solution. Alpha-1-antitrypsin levels were measured by indirect ELISA assay developed in this laboratory using antibodies and antigen purchased from Calbiochem Inc. (San Diego, CA). Fibronectin was determined by an ELISA using reagents from Collaborative Research (Lexington, MA). Prostaglandin E_2 (PGE_2) levels were determined using an RIA kit from New England Nuclear (Cambridge, MA). Leukotriene B4 was determined using an RIA kit from Advanced Magnetics (Cambridge, MA). C3a levels were determined using an RIA kit from Amersham (Arlington Heights, IL). IL-6 was determined by a biological assay using the IL-6 dependent 7TD1 hybridoma and the hexosaminidase assay for quantitation of cell number (Landegren, 1984). For phagocytosis assays, *C. albicans* spores were fixed in 70% ethanol and then labeled with 100 μg/ml fluorescein diisothiocyanate (FITC) in borate buffer pH 9.2 for 1 hour at room temperature. Unreacted FITC was removed by washes in PBS. Half of the yeast preparation was opsonized with fresh human serum for 60 minutes at 37°C; the yeast count was then adjusted to $1x10^7$/ml. 0.2 ml of the unopsonized and the opsonized *C. albicans* was then added to $2x10^5$ alveolar macrophages in 0.2 ml in polypropylene tubes. After 60 minutes at 37°C, the cells were washed at low speed and resuspended in 0.5 ml for analysis of percentage of phagocytic cells. The fluorescence of extracellular yeast was quenched with trypan blue. For phagocytosis assays of Respiratory Syncytial Virus (RSV) (Long strain/lot 15D) was obtained from ATCC and was propagated in HEp2 cells as has been previously described (Becker et. al., 1991). A virus pool with $3x10^7$ PFU/ml was stored at -70°C and was used in all the experiments. Three $x10^5$ AM, adhered in 16 mm plastic tissue culture wells were infected with multiplicities of infection (moi) of 1 and 0.1 for one hour. Nonabsorbed virus were then removed and 1 ml of RPMI with 2% Fetal Bovine Serum (FBS) was added to the cells. At days two and four after infection, supernatants were analyzed for the presence of infectious RSV, determined by syncytia formation on HEp2 cells (Becker et. al, 1991, 1992). Oxidative burst activity of cells was determined by the superoxide anion (O_2^-)-mediated reduction of ferricytochrome C in a microassay described by Pick and Keisari, 1981. Briefly, 10^5 macrophages suspended in Hank's balanced salt solution (HBSS) were plated per well in a 96-well plate, then incubated with media, phorbol myristate acetate (PMA; 100 ng/ml), or formyl-met-leu-phenyl (fMLP; 10^{-7} M) in the presence of 80 μM ferricytochrome C, type VI. The plate was incubated at 37°C for up to 1 hour, then OD was read at 550 nm. Some samples were treated with superoxide dismutase to be used as control samples.

In vitro experiments

The phagocytosis, RSV infectivity, and superoxide production assays performed in the in vitro experiments were identical to those described above. However, the alveolar macrophages were recovered from normal subjects not exposed to air or to any pollutant, then cultured slightly differently. Macrophages were cultured for 4 or 18 hours in RPMI 1640 with 5% fetal calf serum (FCS) containing 20 mM MES buffer and 20 μg/ml

Gentamycin in rolling polypropylene tubes to avoid adherence. The pH was adjusted to pH 7 and pH 6 with HCl or NaOH. In preliminary experiments, lower pH (less than 6.0) caused excessive cell death. After culture, the cells were washed and resuspended in RPMI with 2% FCS.

Statistical analysis

All spirometry and plethysmography data were recovered, stored, and tabulated by computer. All immunological and biochemical data were reduced using standard methods and entered into spreadsheet software for routine manipulation and analysis.

By design, this pilot study was intended to narrow the search for sensitive markers for future research and be "over-predictive" so as to not overlook a possible effect. In other words, this study was intended to be hypothesis-generating rather than hypothesis-testing. All data were analyzed by paired t-tests. Each subject served as his or her own control, minimizing variation in response between subjects. A p-value of 0.05 or less was considered significant. Some results were also analyzed using the nonparametric Wilcoxon signed-rank test (Goldstein, 1986). It is, of course, recognized that multiple testing of several variables presents the possibility for some results appearing to be significant at the $p=0.05$ level due to random chance. This potential for error was accepted, however, because of the hypothesis-generating nature of the study.

RESULTS

Nitric Acid Chamber Concentrations

The control of nitric acid in experimental chambers is problematic. Nitric acid appears to both absorb and adsorb onto surfaces in chambers, including stainless steel chamber walls. In our setting, this reaction seemed to passivate the surfaces after approximately an hour, then the nitric acid concentration increased to the desired levels. This passivation appeared to be dependent on the "history" of the chamber surfaces since the last nitric acid exposure. Even with these problems, however, we were able to control the concentration to within ±10% of the desired value during an exposure, and occasionally to within ±5%.

There are two sets of data on the chamber concentration of HNO_3 to consider: the concentration as measured by the modified NO-NO_x analyzer, and the concentration of chamber HNO_3 as chemically measured in samples of chamber air collected on nylon filters. The chamber HNO_3 concentrations measured using the modified NO-NO_x analyzer (calibrated against NO in nitrogen) averaged 210 $\mu g/m^3$ (range 196 to 235 $\mu g/m^3$). However, as noted in the Materials and Methods section above, it appeared that the instrument's Teflon inlet particle filters provided by analyzer manufacturer absorbed about 23% of the incoming HNO_3 when we compared measured HNO_3 against the expected HNO_3 emitted from the permeation tube. Accordingly, the value of 210 $\mu g/m^3$ is probably low, and the average HNO_3 concentration in the chamber may have been as high as 273 $\mu g/m^3$.

The HNO_3 concentration of the chamber air samples collected on nylon filters averaged 149 $\mu g/m^3$ (range 110 to 185 $\mu g/m^3$); this was an average of 71% of that measured by the modified NO-NO_x analyzer. The cause of the apparent loss of HNO_3 in this measurement is not known. Although the Teflon particle filter is not supposed to remove HNO_3 vapor from the sample stream (Joseph and Spicer, 1978), it seems possible that impurities in the Teflon filters may cause trapping and removal of nitric acid.

During the course of these experiments, we began to notice the accumulation of a "wet" material on the stainless steel walls of the chamber. Analysis of this material by GC/MS revealed the material to be DEAE-nitrate. DEAE is N,N-diethylethanolamine (CAS # 100-37-8). The chamber system uses a boiler to provide heat for controlling chamber temperature, and DEAE is a common boiler additive used to reduce internal boiler corrosion. In addition, it is common at many facilities, including this one, to use the boiler steam for humidification. When the boiler water with DEAE was used to provide chamber humidification, DEAE vapor became part of the chamber air. The DEAE apparently reacted with the nitric acid vapor to form neutral, non-volatile DEAE-nitrate salt. In the course of these studies, we were not able to measure quantitatively the amount of DEAE-nitrate in the chamber because it is technically very difficult to quantitate such amines in air samples. However, because the chamber uses HEPA filters to remove particles (such as DEAE-nitrate salt) on every pass of air through the chamber, the concentration of

DEAE-nitrate in the chamber is thought to have been very low. A test of the relationship between chamber relative humidity and nitric acid concentration in the chamber indicated that the concentration of DEAE in the chamber air was on the order of 10-30 $\mu g/m^3$. Therefore, it appears that the subjects were exposed to a combination of 200 $\mu g/m^3$ nitric acid vapor along with organic nitrate particles, also in microgram quantities.

Immunological measurements

Differential cell count. Referred to as "cell differential counting," this evaluation was done visually by microscope using cells cytocentrifuged and stained with modified Wright's solution. This is a useful test because one of the hallmarks of inflammation is infiltration of polymorphonuclear leukocytes (PMNs or granulocytes) to the site of inflammation. Accordingly, differential cell counting was performed to quantitate the number and types of cells recovered in the lavage.

Table 2 summarizes the differential counts on cells in the BAL after air and HNO_3 exposure. No changes in total cells recovered or in the percentage of polymorphonuclear cells (PMN) were found to suggest an inflammatory response ($p \approx 0.4$). The percentage of macrophages and lymphocytes were also not affected by the acid exposure.

Markers of lung injury or inflammation. Six markers of injury and inflammation were examined. Increased presence of protein in lavage fluid is evidence of increased vascular permeability, and increased permeability is closely associated with inflammation (Williams and Jose, 1981). Likewise, long-term inflammation and lung damage may lead to fibrosis; that is, the placement of inelastic fibers in lung tissue. Fibronectin has been shown to play a key role in fibrogenesis (Rennard et al., 1981; Postlethwaite et al., 1981). C_3a is a component of the activated complement system which is also a potent PMN chemotactic factor (Slauson, 1982). The arachidonic acid metabolite prostaglandin (PGE_2) is a potent mediator of inflammation and chemotaxis (Slauson, 1982; Fantone and Ward, 1984). Enzymes capable of damaging surrounding tissues. Lastly, alpha-1-antitrypsin is associated with long-term damage to lung structures (Fantone and Ward, 1984; Bowen et al., 1985; Janoff et al., 1977).

Table 3 and Figures 1a and 1b summarize the data obtained for total protein content, LDH, fibronectin (Fn), alpha-1-antitrypsin (a-1-at), PGE_2, and C3a levels in BAL fluids from air-exposed and HNO_3-exposed individuals. No changes in any of these markers were observed.

Alveolar macrophage phagocytic activity. The alveolar macrophage is the resident mononuclear phagocyte of the lung and the primary defender against inhaled infectious agents. Alveolar macrophages can be tested for their ability to phagocytose heatkilled yeast (Candida albicans) as a measure of immune defense capabilities against infection.

TABLE 2. CELL RECOVERY AND DIFFERENTIAL CELL COUNTS IN THE BAL OF SUBJECTS EXPOSED TO AIR AND HNO_3

SUBJECT	EXPOSURE	TOTAL CELLS (10^6)	% CELL TYPE		
			MACROPHAGES	PMN	LYMPHOCYTES
1	AIR	38.9	87	6.0	7
	HNO_3	39.4 (1.0)*	76 (0.9)	4.0 (0.7)	10 (1.4)
2	AIR	39.0	90	2.0	8
	HNO_3	48.5 (1.2)	86 (1.0)	2.0 (1.0)	12 (1.5)
3	AIR	25.0	88	1.6	9
	HNO_3	24.8 (1.0)	75 (0.9)	1.4 (0.9)	23 (2.6)
4	AIR	27.3	84	1.2	15
	HNO_3	24.8 (0.9)	93 (1.1)	0.7 (0.6)	7 (0.5)
5	AIR	32.4	90	0.5	10
	HNO_3	32.0 (1.0)	84 (0.9)	2.0 (4.0)	13 (1.3)
6	AIR	37.4	91	1.2	7
	HNO_3	41.0 (1.1)	94 (1.0)	0.6 (0.5)	6 (0.9)
7	AIR	38.7	94	0.8	5
	HNO_3	27.2 (0.7)	93 (1.0)	0.6 (0.8)	5 (1.0)
8	AIR	36.3	86	0.1	8
	HNO_3	33.0 (0.9)	91 (1.1)	1.0 (10.0)	12 (1.5)
9	AIR	51.3	80	10.0	9
	HNO_3	89.6 (1.7)	81 (1.0)	8.0 (0.8)	10 (1.1)
Means ±SE	AIR (N=9)	36.3 ±2.6	87.8 ±1.4	2.6 ±1.1	8.7 ±0.9
	HNO_3 (N=9)	40.0 ±6.7	85.9 ±2.5	2.3 ±0.8	10.9 ±1.8
Mean ratio ±SE		1.1 ±0.1	1.0 ±0.03	2.1 ±1.0	1.3 ±0.2
p value		$p > 0.2$	$p > 0.4$	$p > 0.4$	$p > 0.3$

* Numbers in parentheses represent the ratio of the number of cells in the BAL after HNO_3 exposure to the number of cells in the BAL after air exposure of the same subject.

TABLE 3. MARKERS OF LUNG INJURY OR INFLAMMATION

SUBJECT	EXPOSURE	PROTEIN (µg/ml)	LDH (units/ml)	FIBRONECTIN (ng/ml)	ALPHA-1-ANTITRYPSIN (µg/ml)	PGE_2 (pg/ml)	C3a (ng/ml)
1	AIR	67	8	6.9	2.65	0.47	35.84
	HNO_3	291 (4.34)*	4.4 (0.55)	40.1 (5.81)	9.15 (3.45)	1.24 (2.62)	99.26 (2.77)
2	AIR	318	12.5	30.2	5.69	0.51	85.44
	HNO_3	347 (1.09)	9 (0.72)	43.1 (1.43)	1.32 (0.23)	0.33 (0.63)	91.15 (1.07)
3	AIR	139	5.6	74.2	3.02	0.74	49.55
	HNO_3	168 (1.21)	5.5 (0.98)	39.4 (0.53)	4.92 (1.63)	0.37 (0.50)	56.86 (1.15)
4	AIR	244	11.7	66.4	3.9	0.98	50.68
	HNO_3	181 (0.74)	7.9 (0.68)	78.1 (1.18)	5.67 (1.45)	0.50 (0.51)	39.07 (0.77)
5	AIR	217	3.9	52.2	1.03	1.03	68.82
	HNO_3	145 (0.67)	9.8 (2.51)	35.8 (0.69)	1.32 (1.28)	0.84 (0.82)	51.53 (0.75)
6	AIR	168	11.1	28.1	5.63	0.84	43.31
	HNO_3	76 (0.45)	3.1 (0.28)	11 (0.39)	8.72 (1.55)	0.34 (0.40)	0.29 (0.01)
7	AIR	151	8.3	40.9	8.23	0.60	57.7
	HNO_3	130 (0.86)	8.5 (1.02)	49.1 (1.20)	6.41 (0.78)	0.44 (0.74)	44.22 (0.77)
8	AIR	229	10.1	54.9	4.47	0.98	135
	HNO_3	98 (0.43)	9.4 (0.93)	22.4 (0.41)	6.51 (1.46)	0.37 (0.38)	68.24 (0.51)
9	AIR	395	15	ND	18.04	2.68	85.79
	HNO_3	468 (1.18)	14.2 (0.95)	ND -	17.51 (0.97)	4.18 (1.56)	127.6 (1.49)
Means ±SE	AIR (N=9)†	214 ±32.92	9.58 ±1.16	44.23 ±7.82	5.85 ±1.67	0.98 ±0.22	68.01 ±10.21
	HNO_3 (N=9)†	211 ±43.40	7.98 ±1.11	39.88 ±6.96	6.84 ±1.62	0.96 ±0.42	64.25 ±12.54
Mean ratio ±SE		1.22 ±0.40	0.96 ±0.21	1.45 ±0.64	1.42 ±0.29	0.91 ±0.24	1.03 ±0.26
p value		$p > 0.5$	$p > 0.2$	$p > 0.5$	$p > 0.5$	$p > 0.3$	$p > 0.4$

* Numbers in parentheses represent the ratio of the value measured in BAL after HNO_3 exposure to that after air exposure of the same subject.
† Except for fibronectin, in which case N=8 for both air and HNO_3.

The ability of AM from air-exposed and HNO_3-exposed subjects to phagocytize unopsonized and serum opsonized *C.albicans* was tested immediately upon isolation of the cells (Table 4 and Figures 2 and 3). The HNO_3-exposed AM showed increased phagocytosis of the unopsonized yeast from 14% to 26% ($p < 0.05$). Increased phagocytosis of opsonized *C. albicans* (Figure 3) was also found, with the AM increasing their phagocytic population from 55% to 68% ($p < 0.05$).

Virus production by RSV-infected alveolar macrophages. Alveolar macrophages display a range of defensive responses to different types of viruses (Morahan et al., 1985). We have developed a model for response to viral infection using the responses of Am to Respiratory Synctial Virus (RSV). AM have previously been shown to be susceptible to infection with RSV, although the infection is abortive and few infectious particles are produced after four days (Becker et. al., 1992).

AM from the air-exposed and HNO_3-exposed subjects were infected with RSV and the release of infectious virus was followed for two and four days (Table 4 and Figure 4). (Only the day 2 data are shown.) There was a wide variability in the infectivity in air-exposed AM, and in all but one subject AM showed decreased release of infectious virus after the HNO_3 exposure. Using a paired t-test, $0.2>p>0.1$, and using the non-parametric Wilcoxon signed-rank test, $p < 0.05$, for these results.

Superoxide production by alveolar macrophages. The production of superoxide anion by macrophages is thought to be one of the primary mechanisms of macrophage cytotoxicity. Upon adherence to plastic 96-well assay plates, AM "spontaneously" produce superoxide, and the presence of phytohemagglutinin (PMA) does not increase this release.

Superoxide production by AM from air-exposed and HNO_3-exposed subjects was assayed after 0.5 hour of adherence in the presence or absence of PMA (Table 4 and Figure 5). A decrease in adherence-induced release was found in the HNO_3-exposed AM ($p < 0.05$), and PMA stimulation did not uncover any additional change.

Pulmonary function and symptom measurements

Tables 5, 6, 7, and 8 present the results of measurements of SRAW, FVC, FEV_1, and FEV_1/FVC made before and after exposure to air and HNO_3. There was a slight, statistically significant difference in SRAW after the exposure due to the exercise per se (Table 5). There were no other changes observed and no indication of an effect due to the HNO_3.

Subjects reported the "sham" symptom of sweating in both the air and HNO_3 exposures, but other symptoms were essentially unreported by the subjects.

TABLE 4. MEASURES OF MACROPHAGE FUNCTION

SUBJECT	EXPOSURE	% PHAGOCYTOSIS (unopsonized)	% PHAGOCYTOSIS (opsonized)	RSV (PFU x 10^3/ml)	SUPEROXIDE (nM O_2^-/10^5 cells)
1	AIR	21	77	7	24
	HNO_3	28 (1.33)*	76 (0.99)	3.7 (0.53)	7 (0.29)
2	AIR	9	68	6.7	11.8
	HNO_3	31 (3.44)	80 (1.18)	2.7 (0.40)	3 (0.25)
3	AIR	9	50	13	2.3
	HNO_3	29 (3.22)	43 (0.86)	5.6 (0.43)	0.51 (0.22)
4	AIR	18	50	3	0.57
	HNO_3	20 (1.11)	56 (1.12)	3.9 (1.30)	0.51 (0.89)
5	AIR	19	50	ND	0.64
	HNO_3	59 (3.11)	83 (1.66)	ND -	0.4 (0.63)
6	AIR	13	51	2.3	15.1
	HNO_3	29 (2.23)	81 (1.59)	0.7 (0.30)	0.1 (0.01)
7	AIR	9	49	28	3.3
	HNO_3	15 (1.67)	77 (1.57)	ND -	0.1 (0.03)
8	AIR	6	27	34	0.1
	HNO_3	15 (2.50)	46 (1.70)	4.5 (0.13)	0.1 (1.00)
9†	AIR	25	69	6.5	0.08
	HNO_3	12 (0.48)	66 (0.96)	3.2 (0.49)	0.59 (7.38)
Means ±SE	AIR (N=9)‡	14.33 ±2.20	54.56 ±4.94	12.56 ±4.22	6.43 ±2.86
	HNO_3(N=9)	26.44 ±4.73	67.56 ±5.19	3.47 ±0.58	1.37 ±0.77
Mean ratio ±SE		2.12 ±0.35	1.29 ±0.11	0.51 ±0.14	1.19 ±0.78
p value		$p < 0.05$	$p < 0.05$	$p \approx 0.13$	$p \approx 0.06$

* Numbers in parentheses represent the ratio of the value measured in the BAL after HNO_3 exposure to that after air exposure of the same subject.

† Abnormal amounts of PMNs in the lavage after both exposures.

‡ Except for RSV, in which case N=8 for air and N=7 for HNO_3.

FIGURE 3. MARKERS OF LUNG INJURY OR INFLAMMATION

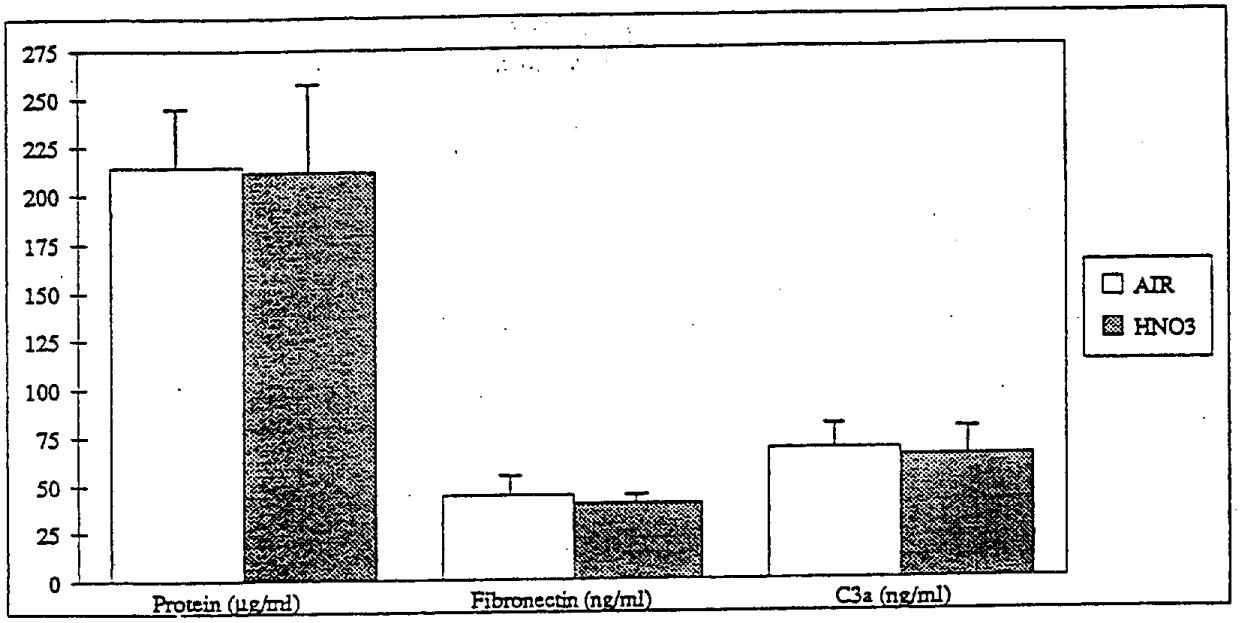

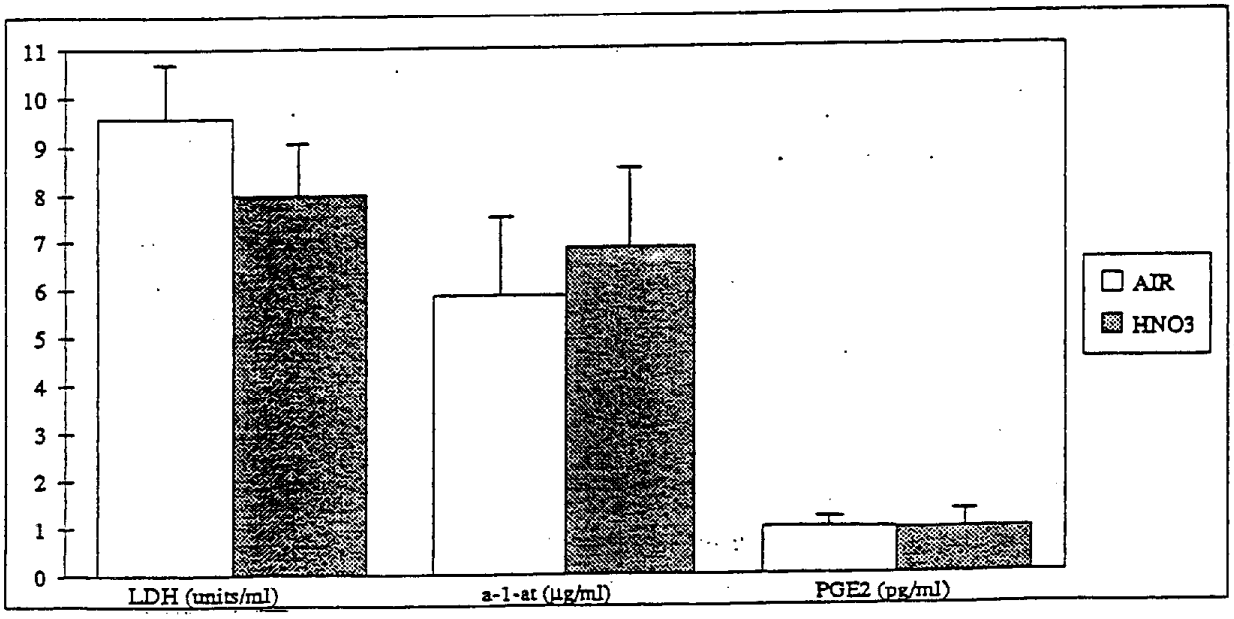

BAL fluids from air-exposed and HNO_3-exposed subjects were analyzed for total protein content, lactic dehydrogenase activity (LDH), fibronectin (Fn), alpha-1-antitrypsin (a-1-at) activity, PGE_2, and C3a. The units are per ml of BAL fluid. The heights of the bars represent the mean values; errors bars indicate standard error of the mean.

FIGURE 4. PHAGOCYTOSIS OF UNOPSONIZED *CANDIDA ALBICANS* BY HUMAN ALVEOLAR MACROPHAGES (AM).

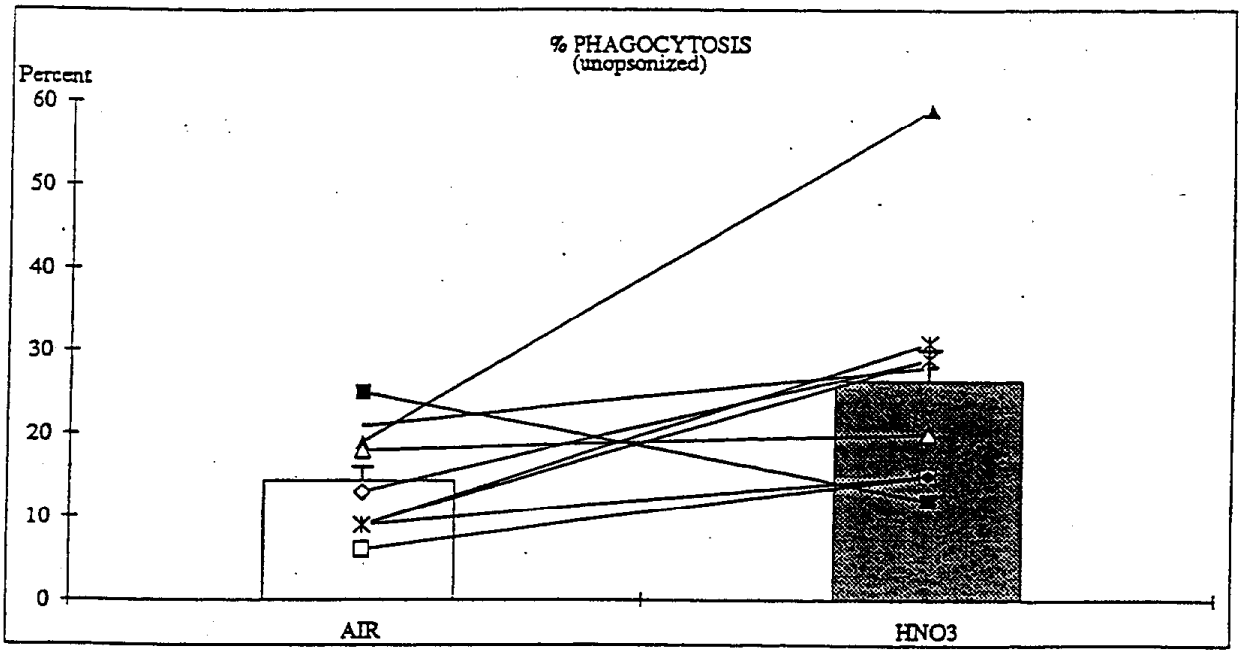

AM from air-exposed and HNO_3-exposed subjects were assayed for phagocytosis of unopsonized yeast after 60 minutes of co-incubation of particles and AM. The heights of the bars represent the mean values of the percent phagocytosis; error bars indicate standard error of the mean.

FIGURE 5. PHAGOCYTOSIS OF OPSONIZED *CANDIDA ALBICANS* BY HUMAN ALVEOLAR MACROPHAGES (AM).

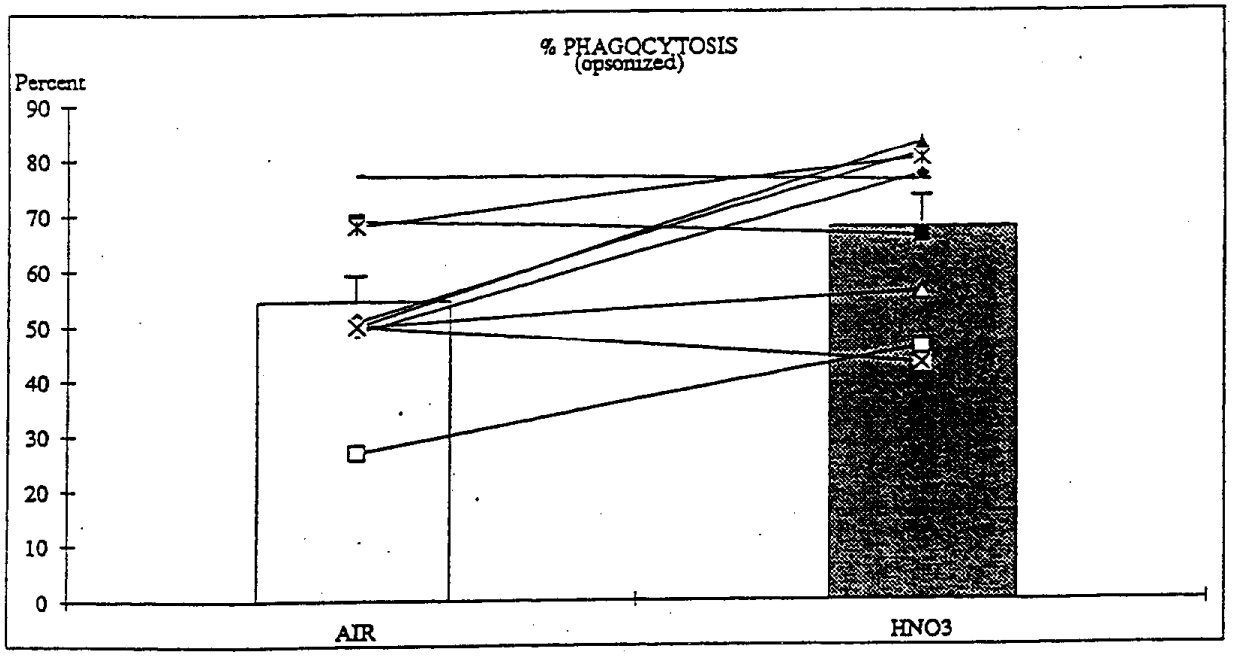

AM from air-exposed and HNO_3-exposed subjects were assayed for phagocytosis of opsonized yeast after 60 minutes of co-incubation of particles and AM. The height of the bars represent the mean values of the percent phagocytosis; error bars indicate standard error of the mean.

TABLE 5. SRAW MEASURED DURING EXPOSURE TO CLEAN AIR AND TO HNO_3

	AIR			HNO_3		
SUBJECT	PRE-EXPOSURE	POST-EXPOSURE	DIFFERENCE	PRE-EXPOSURE	POST-EXPOSURE	DIFFERENCE
1	4.71	5.35	0.64	3.90	3.79	-0.11
2	4.29	4.64	0.35	3.76	4.35	0.59
3	3.73	4.44	0.71	3.38	3.86	0.48
4	4.74	4.61	-0.13	4.63	4.57	-0.06
5	4.43	6.19	1.76	4.68	4.59	-0.09
6	3.34	4.45	1.11	2.20	3.93	1.73
7	5.11	6.19	1.08	5.25	5.60	0.35
8	3.83	4.50	0.67	4.26	4.31	0.05
9	4.77	4.23	-0.54	2.50	3.50	1.00
Mean ±SE	4.33 ±0.19	4.96 ±0.25	0.63 ±0.23	3.84 ±0.34	4.28 ±0.21	0.44 ±0.20
p value		$p < 0.05^*$			$p < 0.10^\dagger$	$P > 0.5^\ddagger$

N=9. SRaw was measured immediately before entering the chamber containing clean air or 200 μg HNO_3/m^3 ("Pre-Exposure") and at the end of the 2-hour exposure while still in the chamber ("Post-Exposure").

* Post-Exposure mean is significantly different from Pre-Exposure mean at $p < 0.05$.

† Post-Exposure mean not significantly different from Pre-Exposure mean.

‡ The mean of the difference of the Post-Exposure and Pre-Exposure values for HNO_3 exposure not significantly different from that for air exposure.

TABLE 6. FVC MEASURED DURING EXPOSURE TO CLEAN AIR AND TO HNO_3

	AIR			HNO_3		
SUBJECT	PRE-EXPOSURE	POST-EXPOSURE	DIFFERENCE	PRE-EXPOSURE	POST-EXPOSURE	DIFFERENCE
1	5948	5753	-195	5991	5837	-154
2	5539	5307	-232	5469	5387	-82
3	6062	6086	24	5958	5705	-253
4	5733	5730	-3	5883	5817	-66
5	5103	5117	14	5064	4945	-119
6	4755	4773	18	4844	4670	-174
7	6247	6147	-100	6168	6209	41
8	5256	5195	-61	5165	5167	2
9	6237	6526	289	6418	6771	353
Mean ±SE	5653 ±176	5626 ±190	-27 ±50	5662 ±182	5612 ±217	-50 ±59
p value		$p > 0.5^1$			$p > 0.4^1$	$p > 0.5^2$

N=9. FVC was measured immediately before entering the chamber containing clean air or 200 μg HNO_3/m^3 ("Pre-Exposure") and at the end of the 2-hour exposure while still in the chamber ("Post-Exposure").

[1] Post-Exposure mean not significantly different from Pre-Exposure mean.

[2] The mean of the difference of the Post-Exposure and Pre-Exposure values for HNO_3 exposure not significantly different from that for air exposure.

TABLE 7. FEV_1 MEASURED DURING EXPOSURE TO CLEAN AIR AND TO HNO_3

	AIR			HNO_3		
SUBJECT	PRE-EXPOSURE	POST-EXPOSURE	DIFFERENCE	PRE-EXPOSURE	POST-EXPOSURE	DIFFERENCE
1	4823	4667	-156	4874	4792	-82
2	4356	4187	-169	4320	4265	-55
3	5341	5244	-97	5039	4786	-253
4	4316	4423	107	4344	4388	44
5	4169	4165	-4	4203	4080	-123
6	4248	4256	8	4181	4243	62
7	4445	4424	-21	4434	4439	5
8	4207	4166	-41	4202	4179	-23
9	4777	4940	163	5167	5440	273
Mean ±SE	4520 ±129	4497 ±127	-23 ±37	4529 ±129	4512 ±143	-17 ±48
p value		$p > 0.5^{\dagger}$			$p > 0.5^{\dagger}$	$p > 0.5^{\ddagger}$

N=9. FEV_1 was measured immediately before entering the chamber containing clean air or 200 μg HNO_3/m^3 ("Pre-Exposure") and at the end of the 2-hour exposure while still in the chamber ("Post-Exposure").

† Post-Exposure mean not significantly different from Pre-Exposure mean.

‡ The mean of the difference of the Post-Exposure and Pre-Exposure values for HNO_3 exposure not significantly different from that for air exposure.

TABLE 8. RATIO OF FEV_1 TO FVC MEASURED DURING EXPOSURE TO CLEAN AIR AND TO HNO_3

	AIR			HNO_3		
SUBJECT	PRE-EXPOSURE	POST-EXPOSURE	DIFFERENCE	PRE-EXPOSURE	POST-EXPOSURE	DIFFERENCE
1	81	81	0	81	82	1
2	79	79	0	79	79	0
3	88	86	-2	85	84	-1
4	75	77	2	74	75	2
5	82	81	0	83	83	0
6	89	89	0	86	91	5
7	71	72	1	72	71	0
8	80	80	0	81	81	0
9	77	76	-1	81	80	0
Mean ±SE	80 ±2	80 ±2	0 ±0	80 ±2	81 ±2	1 ±1
p value		$p > 0.5^{\dagger}$			$p > 0.2^{\dagger}$	$p > 0.2^{\ddagger}$

N=9. FEV_1 and FVC were measured immediately before entering the chamber containing clean air or 200 μg HNO_3/m^3 ("Pre-Exposure") and at the end of the 2-hour exposure while still in the chamber ("Post-Exposure").

† Post-Exposure mean not significantly different from Pre-Exposure mean.

‡ The mean of the difference of the Post-Exposure and Pre-Exposure values for HNO_3 exposure not significantly different from that for air exposure.

In vitro experiments

In the preliminary in vitro experiments, acidification of the medium from pH 7.0 to pH 6.0 caused an increase in phagocytosis of unopsonized *Candida albicans* (Table 9). This occurred only after the 4-hour incubation time and was observed both on the basis of percentage of macrophages taking up the yeast (from 39.0% to 54.5%) and the amount of yeast phagocytosed (from a flow cytometry signal of 16.7 to 21.8). Phagocytosis of opsonized *Candida albicans*, RSV infectivity, and superoxide production were unchanged (Tables 9 and 10).

TABLE 9. IN VITRO TESTING OF MACROPHAGE FUNCTION: PHAGOCYTOSIS OF CANDIDA ALBICANS

			PHAGOCYTOSIS OF C. ALBINCANS			
			UNOPSONIZED		OPSONIZED	
INCUBATION TIME	MEDIA pH	LAVAGE SAMPLE NUMBER[a]	% AM[b]	FLOW-CYTOMETRY SIGNAL[c]	% AM[b]	FLOW-CYTOMETRY SIGNAL[c]
4 hours	7.0	NO9	25.8	12.5	33.6	24.0
		NO10	55.6	13.8	76.4	65.9
		NO7	35.3	19.9	43.4	21.3
		377	18.2	18.3	29.5	30.5
		383	49.4	20.6	85.8	31.0
		388	49.5	15.0	93.2	48.0
		Mean ±SE	39.0 ±6.1	16.7 ±1.5	60.3 ±11.5	36.8 ±7.6
4 hours	6.0	NO9	54.1	17.3	40.8	23.5
		NO10	63.5	19.1	79.6	47.7
		NO7	40.7	17.3	47.1	20.0
		377	46.9	30.8	64.9	48.2
		383	58.1	23.9	89.0	39.5
		388	63.6	22.2	89.7	47.5
		Mean ±SE	54.5 ±3.8	21.8 ±2.3	68.5 ±8.6	37.7 ±5.7
		p value	p = 0.01[d]	p = 0.05[d]	p = 0.10	p > 0.50
18 hours	7.0	NO5	52.5	14.5	53.4	25.6
		NO9	59.1	19.1	77.3	70.7
		NO10	70.1	19.6	77.0	117.3
		388	57.1	22.9	84.0	39.2
		390	72.4	20.2	92.2	26.1
		392	43.60	11.3	80.3	14.0
		Mean ±SE	59.1 ±4.4	17.9 ±1.9	77.4 ±5.3	48.8 ±17.4
18 hours	6.0	NO9	57.7	19.3	53.0	38.3
		NO10	64.3	21.6	75.7	56.9
		388	70.2	35.1	82.1	44.5
		390	75.0	22.1	92.9	30.2
		392	64.0	16.9	87.7	22.8
		Mean ±SE	66.2 ±3.0	23.0 ±3.5	78.3 ±6.9	38.5 ±6.6
		p value	p = 0.15	p > 0.10	p = 0.25	p = 0.30

[a] Alveolar macrophages were recovered from lavages performed on normal, healthy male subjects.
[b] Values given are the percentage of AM that show phagocytosed yeast.
[c] Values given are a relative measure of fluorescence from flowcytometry and are approximately proportional to the number of yeast phagocytosed per macrophage.
[d] Mean value at pH = 6.0 significantly greater than mean value at pH = 7.0.

TABLE 10. IN VITRO TESTING OF MACROPHAGE FUNCTION: RSV RELEASE AND SUPEROXIDE PRODUCTION

			RSV RELEASE (PFU x 10^3/ml)				SUPEROXIDE PRODUCTION (nM O_2^-/ 10^5 cells)	
			2-DAY INCUBATION		4-DAY INCUBATION			
INCUBATION TIME	MEDIA pH	LAVAGE SAMPLE NUMBER*	MOI=1†	MOI=3	MOI=1	MOI=3	NO PMA‡	WITH PMA
4 hours	7.0	NO9	16.0	17.0	2.5	5.0	-	-
		NO10	5.5	6.5	9.5	16.0	6.0	6.6
		NO7	5.6	11.0	6.6	6.5	-	-
		383	5.45	2.1	9.0	3.5	4.6	4.4
		386	49.5	715.0	47.5	470.0	6.8	6.0
		388	114.0	216.0	41.0	195.0	8.6	7.3
		392	-	-	-	-	9.4	9.0
		393	-	-	-	-	5.3	7.6
		Mean ±SE	32.7 ±17.7	161.3 ±115.8	19.4 ±8.0	116.0 ±77.1	6.8 ±0.8	6.8 ±0.6
4 hours	6.0	NO9	21.0	15.0	7.0	5.0	-	-
		NO10	1.5	7.0	16.0	22.0	8.1	7.7
		NO7	4.2	11.0	5.5	1.9	-	-
		383	4.5	1.9	1.3	2.1	4.8	6.6
		386	35.0	470.0	36.0	500.0	5.5	3.6
		388	113.0	360.0	39.0	112.0	6.2	6.6
		392	-	-	-	-	7.9	8.1
		393	-	-	-	-	7.9	7.9
		Mean ±SE	29.9 ±17.4	144.1 ±86.8	17.5 ±6.6	107.2 ±80.4	6.8 ±0.6	6.7 ±0.7
		p value	p = 0.17	p = 0.38	p = 0.27	p = 0.30	p = 0.48	p = 0.46
18 hours	7.0	NO5	14.0	29.0	4.5	4.5	-	-
		NO9	17.0	8.5	4.0	7.5	-	-
		NO10	5.0	3.0	8.5	8.5	5.9	7.6
		388	-	-	-	-	6.1	4.7
		390	10.5	47.0	40.0	27.5	8.9	8.8
		392	-	-	-	-	7.1	6.4
		Mean ±SE	11.6 ±2.6	21.9 ±10.1	14.3 ±8.6	12.0 ±5.2	7.0 ±0.7	6.9 ±0.9
18 hours	6.0	NO9	12.0	6.0	3.5	1.5	-	-
		NO10	4.5	1.0	11.0	8.0	6.4	8.7
		388	-	-	-	-	5.2	5.8
		390	22.0	56.0	23.5	45.5	9.4	6.0
		392	-	-	-	-	8.0	6.0
		Mean ±SE	12.8 ±5.1	21.0 ±17.6	12.7 ±5.8	18.3 ±13.7	7.3 ±0.9	6.6 ±0.7
		p value	p > 0.50	p > 0.50	p = 0.50	p > 0.50	p = 0.29	p = 0.39

* Alveolar macrophages were recovered from lavages performed on normal, healthy male subjects.
† MOI, multiplicity of infection.
‡ PMA, phorbol myristate acetate.

DISCUSSION

There is a wide choice of immunological endpoints which could be selected in a study of human responses to inhaled acidic atmospheres. For this study we selected two important and sensitive phenomena to examine: (1) markers of inflammation and increased vascular permeability, and (2) markers of alveolar macrophage function. This is, of course, a simplistic classification, since the events of inflammation and increased permeability are tightly integrated with the macrophage functions of phagocytosis and release of powerful natural chemicals which stimulate or inhibit other cells and immune functions. Markers of inflammation and vascular permeability are important responses to air pollutants, since it is well established that most lung diseases involve inflammatory responses, and chronic inflammation is strongly implicated as a first step in permanent lung damage.

We observed that exposure of healthy volunteers to 200 μg HNO_3/m^3 resulted in no apparent effect on various markers of lung injury and inflammation. For example, a hallmark of inflammatory response is the influx of PMN leukocytes to the site of inflammation (Fabbri et. al., 1984; Holtzman et. al., 1983; and Seltzer et. al., 1986), and this was not observed. In comparison, we previously reported that in ozone-exposed subjects, PMN count, protein, LDH, and fibronectin levels were consistently increased, even at 0.10 ppm, a concentration which is below the national ambient air quality standard of 0.12 ppm/hr (Koren et. al., 1989). Also, it is likely that inflammatory responses would have been observed at 18 to 20 hours post-exposure in this present study based on the time course of inflammation observed in animals (Hatch et. al., 1986; Hu et. al., 1982) and humans (Graham et. al., 1988).

We also did not observe any changes in pulmonary mechanics as measured by SRAW, FEV_1, and FVC. Likewise, the subjects' perceived symptoms of exposure were not affected by the acidic atmosphere.

In contrast, the AM functions tested here were changed by HNO_3 exposure. Phagocytosis of both unopsonized and opsonized *C. albicans* was increased. Although animal studies with HNO_3 have not been performed which utilize phagocytosis as a marker of macrophage activity, studies with acute exposures to H_2SO_4 aerosols in rabbits have indicated increased phagocytosis both by macrophages in vivo and inflammatory PMNs in vitro (Schlesinger, 1987). The effects of H_2SO_4 have been suggested to depend on H^+ concentration, and it has been hypothesized that other acids may act by a similar mechanism. Accordingly, we examined in a preliminary manner the effect on macrophages of acidic pH in vitro (in culture) and observed slightly altered phagocytosis of *Candida albicans*, but no changes in RSV infectivity nor in superoxide production.

It is possible that the increase in phagocytosis noticed in individuals exposed to HNO_3 was mediated by the nitrate or nitrous species. NO_2- and NO_3- are highly reactive ionic species which themselves may affect the integrity of the airways. Interestingly, these molecules are of current interest in macrophage biology in that they appear to be involved in macrophage-

mediated tumor cytotoxicity and antimicrobial activity (Iyengar et al., 1987; Moncada et al., 1989). Phagocytosis was observed to be increased in AM from rabbits exposed to NO_2, and increased phagocytosis was also found upon in vitro exposure of the macrophages to NO_2-(Schlesinger, 1987). In vitro studies of the effects on macrophages of NO_2- and NO_3- on phagocytosis will be the subject of future studies.

We also observed that RSV infection of AM was affected by HNO_3 exposure and less virus was produced by HNO_3-exposed AM as compared to the air-exposed cells, again suggesting some activation of the AM (Figure 6). The same percentage of the cells were infected after both exposures as determined by immunofluorescence with an RSV-specific antibody (not shown). The mechanism resulting in nonproductive or abortive RSV infection in AM is not known, but is considered to be an intrinsic antiviral activity of macrophages (Morahan et. al., 1985). In preliminary experiments, two cytokines which have been shown to have antiviral activity, TNF and IL-6, were measured in supernatants from RSV-infected AM from air and HNO_3-exposed subjects, but the amounts of cytokines were found to be the same in control and pollutant-exposed cells (data not shown). We are unaware of any animal data on the effects of acids on viral infectivity to which we may compare our results. However, by analogy with the discussion above on potential effect of NO_2- and NO_3- on phagocytosis, NO_2-exposure of human AM in vitro did not affect any macrophage function studied, including IL-1 release by influenza-infected AM. In contrast, in vivo NO_2-exposed AM have been suggested to have decreased resistance to infection with influenza virus (Frampton et. al., 1989; Rose et. al., 1988).

Superoxide production was decreased in AM from HNO_3-exposed subjects (Figure 7). The capacity to produce this oxidant is altered by the activation state of the macrophage. Human monocytes and AM activated by immunological chemical mediators (e.g., interferon and interleukin) produce increased levels of superoxide while cells stimulated by non-immunological means (such as thioglycolate injection) produce less superoxide. In this respect, the effect of in vivo exposure to nitric acid appeared to downregulate the activation of the macrophages to superoxide production under the adherence conditions tested.

The activation of macrophages and the functional characteristics of various macrophages activation states is the subject of much current research. It is clear from this study that exposure to HNO_3 did not produce alveolar macrophages activated to a maximal immunological response state, as is observed after exposure of macrophages to natural chemical mediators.

FIGURE 6. PRODUCTION OF RSV BY INFECTED HUMAN ALVEOLAR MACROPHAGES (AM).

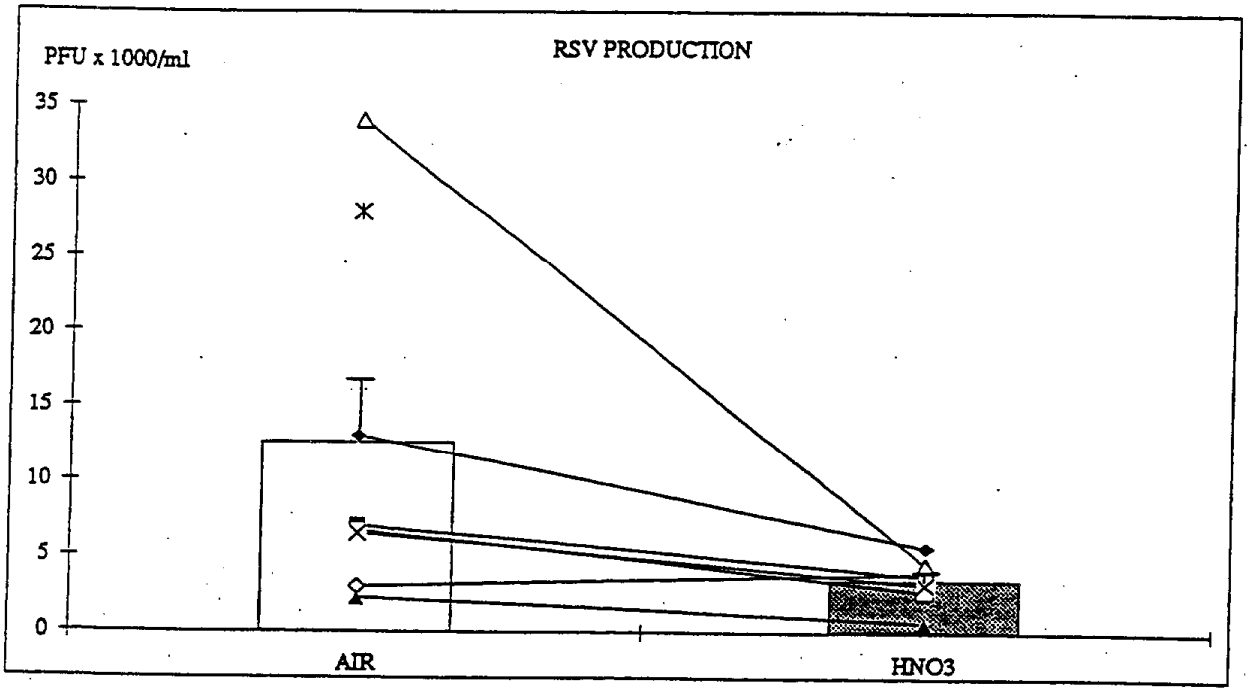

AM in BAL from air-exposed and HNO_3-exposed subjects were infected with RSV at a multiplicity of infection = 1. Supernatants were then tested for infectious virus two days after infection. The heights of the bars represent the mean values of the PFU x 10^3/ml; error bars indicate standard error of the mean.

FIGURE 7. PRODUCTION OF SUPEROXIDE BY HUMAN ALVEOLAR MACROPHAGES (AM).

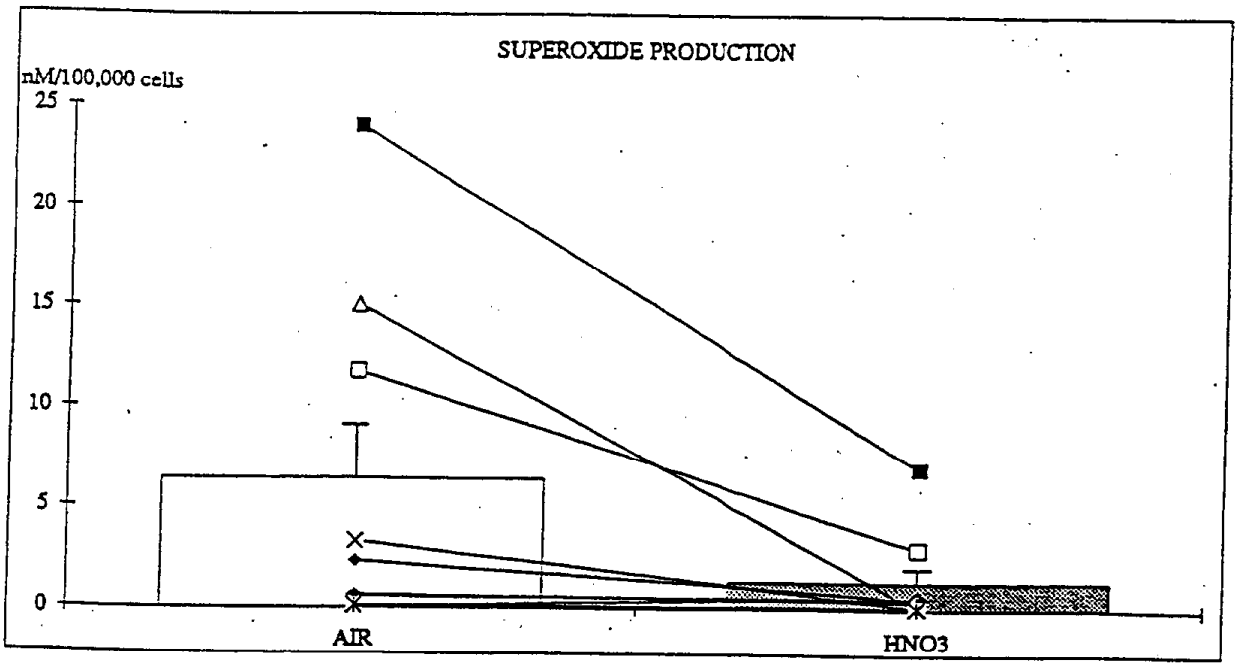

Production of superoxide was determined in AM from air-exposed and HNO_3-exposed subjects immediately upon isolation of the cells. The heights of the bars represent the mean values of the nM of O_2^- per 10^5 cells; error bars indicate standard error of the mean.

CONCLUSIONS

This study was performed to examine whether sensitive markers of human lung immune function might change in response to inhaled HNO_3 and thereby suggest a possible mechanism for aggravation of human pulmonary disease by acidic air pollution. Our results provide no suggestion that inhaled HNO_3 causes an inflammatory response, even at the relatively high concentration tested. Likewise, it is clear that in vivo exposure to HNO_3 did not result in an "immunological" activation of the alveolar macrophages, although they were activated to some extent as evidenced by increased phagocytosis and response to RSV infection.

It is possible that chronic exposure to a lower, commonly-observed concentration such as 20 μg HNO_3/m^3 may cause inflammation, but we would expect some indication of inflammatory response at the higher concentrations we used. This is especially plausible since the inflammation endpoints studied were clearly changed in response to inhalation of a low concentration of ozone (Koren et. al., 1989), and because we did observe at least some response, namely, activation of macrophage function in some manner. This response, and its implications in pulmonary immune function, are worthy of further study.

REFERENCES

Abraham, W.M., Kim, C.S., King, M.M., Oliver, W., Yerger, L. (1982) Effects of nitric acid on carbachol reactivity of the airways in normal and allergic sheep. Arch. Environ. Health 37: 36-40.

Alpert, S.M., Gardner, D.E., Hurst, D.J., Lewis, T.R., and Coffin, D.L. (1971) Effects of exposure to ozone on defensive mechanisms of the lung. J. Appl. Physiol. 31:247-252.

Aris, R., Christian, D., Sheppard, D., and Balmes, J.R. (1991) Lack of bronchoconstrictor response to sulfuric acid aerosols and fogs. Am. Rev. Respir. Dis. 143:744-750.

Bachwich, P.R., Lynch, J.P., Larrich, J., Spengler, M., and Kunkel, S.L. (1986) Tumor necrosis factor production by human sarcoid alveolar macrophages. Am. J. Pathol. 125:421-425.

Balmes, J.R., Fine, J.M., Gordon, T., and Sheppard, D. (1989) Potential bronchoconstrictor stimuli in acid fog. Environ. Health Perspect. 79:163-166.

Bates, D.V. and Sizto, R. (1989) The Ontario air pollution study: Identification of the causative agent. Environ. Health Perspect. 79:69-72.

Bates, D. Personal communication, conference discussion held at US EPA Clinical Studies Branch, Feb. 21, 1990.

Becker, S., Warren, M.K., and Haskill, J.S. (1987) Colony stimulating factor induced survival and differentiation of human monocytes into macrophages in serum-free medium. J. Immunol. 139:3703-3709.

Becker, S., Devlin, R.B., and Haskill, K.S. (1989) Differential production of tissue necrosis factor, macrophage colony stimulating factor, and interleukin-1 by human alveolar macrophages. J. Leukocyte Biol. 45:353-361.

Becker, S., Quay, J., and Soukup, J. (1991) Cytokine (TNF, IL-6 and IL-8) production by respiratory syncytial virus-infected human alveolar macrophages. J. Immunol. 147:4307-4312.

Becker, S., Soukup, J., and Yankaskas, J.R. (1992) Respiratory syncytial virus infection of human primary nasal and bronchial epithelial cell cultures and bronchoalveolar macrophages. Am. J. Respir. Cell Mol. Biol. 6:369-374.

Bowen, R.M., Hoidal, J.R., and Estensen, R.D. (1985) Urokinase-type plasminogen activator in alveolar macrophages in bronchoalveolar lavage fluid from normal and smoke-exposed hamsters and humans. J. Lab. Clin. Med. 106:667-673.

Dassen, W., Brunekreff, B., Hoek, G., Hofschreuder, P., Stattsen, B., deGroot, H., Schouten, E. and Biersteker, K. (1986) Decline in children's pulmonary function during an air pollution episode. J. Air Pollut. Control Assoc. 36:1223-1227.

Devlin, R.B., McDonnell, W.F., Mann, R., Becker, S., House, D.E., Schreinemachers, D., and Koren, H.S. (1991) Exposure of humans to ambient levels of ozone for 6.6 hours causes cellular and biochemical changes in the lung. Am. J. Respir. Cell. Mol. Biol. 4:72-81.

DuBois, A.B., Botelho, S.Y., and Comroe, J.H. (1956) A new method for measuring airway resistance in man using a body plethysmograph: values in normal subjects and in patients with respiratory disease. J. Clin. Invest. 35:327-335.

Fabbri, L.M., Aizawa, H., Alpert, S.E., Walters, E.H., O'Byrne, O.M., Gold, B.D., Nadel, J.A., and Holzman, M.J. (1984) Airway hyperresponsiveness and changes in cell counts in bronchoalveolar lavage after ozone exposure in dogs. Am. Rev. Respir. Dis. 129:288-291.

Fantone, J.C., and Ward, P.A. III (1984) Mechanisms of lung parenchymal injury. Am. Rev. Respir. Dis. 130:484-491.

Fels, A.O., and Cohn, Z.A. (1986) The alveolar macrophage. J. Appl. Physiol. 60:353-369.

Fera, T., Abbond, R.T., Richter, A., and Johal, S.S. (1986) Acute effect of smoking on elastaselike esterase activity and immunologic neutrophil elastase levels in bronchoalveolar lavage fluid. Am. Rev. Respir. Dis. 133:568-573.

Fine, J.M., Gorden, T., Thompsin, J.E., and Sheppard, D. (1987) The role of titratable acidity in acid aerosol-induced bronchoconstriction. Am. Rev. Respir. Dis. 135:826-830.

Folinsbee, L.J., McDonnell, W.F., and Horstman, D.H. (1988) Pulmonary function and symptom responses after 6.6-hour exposure to 0.12 ppm ozone with moderate exercise. J. Air Pollution Control Assoc. 38:28-35.

Folinsbee, L.J. (1989) Human health effects of exposure to airborne acid. Environ. Health Perspect. 79:195-199.

Frampton, M.W., Smeglin, A.M., Roberts Jr., N.J., Finkelstein, J.N., Morrow, P.E., and Utell, M.J. (1989) Nitrogen dioxide exposure *in vivo* and human alveolar macrophage inactivation of influenza virus *in vitro*. Environ. Res. 48:179-192.

Garcia, J.N.G., Noonan, T.C., Jubiz, W., and Malik, A.B. (1987) Leukotrienes and the pulmonary microcirculation. Am. Rev. Respir. Dis. 36:161-169.

Gearhart, J.M., and Schlesinger, R.B. (1988) Response of the tracheobronchial mucociliary clearance system to repeated irritant exposure: effect of sulfuric acid mist on function and structure. Exp. Lung Res. 14:587-605.

Giclas, P.C., King, T.E., Baker, S.L., Russo, J., and Henson, P. (1987) Complement activation in normal rabbit bronchoalveolar fluid. Description of an inhibitor of C3 activation. Am. Rev. Respir. Dis. 135:403-411.

Glover, D.E., Berntsen, J.H., Crider, W.L. and Strong, A.A. (1981) Design and performance of a system to control concentrations of common gaseous air pollutants within environmental laboratories used for human exposure studies. J. Environ. Sci. Health 16:501-522.

Golden, J.A., Nadel, J.A., and Boushey, H.A. (1978) Bronchial hyperirritability in health subject after exposure to ozone. Am. Rev. Respir. Dis. 118:287-294.

Goldstein, A. Biostatistics. MacMillan Comp., New York. pp. 61-62.

Graham, J.A. (1989) Review, discussion, and summary: toxicology. Environ. Health Perspect. 79:191-194.

Graham, D., Henderson, F,, and House, D. (1988) Neutrophil influx measured in nasal lavages of humans exposed to ozone. Arch. Environ. Health 43:228-233.

Hackney, J.D., Linn, W.S., and Avol, E.L. (1989) Acid fog: effects on respiratory function and symptoms in healthy and asthmatic volunteers. Environ. Health Perspect. 79:159-162.

Haskill, S., Johnson, C., Eierman, D., Becker, S., and Warren, M.K. (1988) Adherence induces selective mRNA expression of monocyte mediator and proto-oncogenes. J. Immunol. 140: 1690-1694.

Hatch, G.E., Slade, R., Stead, A.G., and Graham, J.A. (1986) Species comparison of acute inhalation toxicity of ozone and phosgene. J. Toxicol. Environ. Health 19:43-53.

Hazucha, M.J., Ginsberg, J.F., McDonnell, W.F., Haak, E.D., Pimmel, R.L., Salaam, S.A., House, D.E. and Bromberg, P.A. (1983) Effect of 0.1 ppm nitrogen dioxide on airways of normal and asthmatic subjects. J. Appl. Physiol. 54:730-739.

Holtzman, M.J., Aizawa, H., Nadel, J.A., and Goetzl, E.J. (1983) Selective generation of leukotriene B_4 by tracheal epithelial cells from dogs. Biochem. Biophys. Res. Commun. 114:1071-1076.

Holtzman, M.J., Fabbri, L.M., O'Bryne, P.M., Gold, B.D., Aizawa, H., Walters, E.H., Alpert, S.E., and Nadel, J.A. (1983) Importance of airway inflammation of hyperresponsiveness induced by ozone. Am. Rev. Respir. Dis. 127:686-690.

Horstman, D.H., Kehrl, H., Weinberg, P., and Roger, L.J. (1986) Pulmonary function changes for asthmatics performing exercise while exposed to combined sulfur dioxide and sulfuric acid: an interim report. In Lee, S.D., Schneider, T., Grant, L.D., and Verkerk, P.J. (eds), Aerosols; Lewis Publishers. pp. 703-709.

Hu, P.C., Miller, F.J., Daniels, M.J., Hatch, G.E., Graham, J.A., Gardner, D.E., and Selgrade, M.K. (1982) Protein accumulation in lung lavage fluid following ozone exposure. Environ. Res. 29:377-388.

Hurst, D.J., Gardner, D.E., and Coffin, D.L. (1970) Effect of ozone on acid hydrolases of the pulmonary alveolar macrophage. J. Reticuloendothel. Soc. 8:288-300.

Iyengar, R., Stuehr, D.J., and Marletta, M.A. ((1987) Macrophage synthesis of nitrite, nitrate, and N-nitrosamines: precursors and role of the respiratory burst. Proc. Natl. Acad. Sci. 84:6369-6373.

Janoff, A., Blondin, J., Sandhaus, R.A., Mosser, A., and Malemud, C. (1975) In: Reich, E., Rivkin, D.B., Shaw, E. (eds) Proteases and Biological Control. New York: Cold Spring Harbor Lab, 602-609.

Janoff, A., Sloan, B., Weinbaum, G., Damiano, V., Sandhaus, R.A., Elias, J., and Kimbel, P. (1977) Experimental emphysema induced with purified human neutrophil elastase: tissue localization of the instilled protease. Am. Rev. Respir. Dis. 115:461-478.

Joseph, D.W. and Spicer, C.W. (1978) Chemiluminescence method for atmospheric monitoring of nitric acid and nitrogen oxides. Analyt. Chem. 50:1400-1403.

Kleinman, M.T., Phalen, R.F., Mautz, W.J., Mannix, R.C., McClure, T.R., and Crocker, T.T. (1989) Health effects of acid aerosols formed by atmospheric mixtures. Environ. Health Perspect. 79:137-145.

Koenig, J.Q., Pierson, W.E., and Horike, M. (1983) The effects of inhaled sulfuric acid on pulmonary function in adolescent asthmatics. Am. Rev. Resp. Dis. 128:221-225.

Koenig, J.Q., Covert, D.S., Pierson, W.E. (1989a) Effects of inhalation of acidic compounds on pulmonary function in allergic adolescent subjects. Environ. Health Persp. 79: 173-178.

Koenig, J.Q. (1989b) An assessment of pulmonary function changes and oral ammonia levels after exposure of adolescent asthmatic subjects to sulfuric or nitric acid. Presented at the Air and Waste Management Association annual meeting, June 1989; Number 89-92.4, pages 1-18.

Koren, H.S., Devlin. R.B., Graham, D.E., Mann, R., McGee, M.P., Horstman, D. H., Kozumbo, W.J., Becker, S., House, D.E., McDonnell, W.F., and Bromberg, P.A. (1989) Ozone-induced inflammation in the lower airways of human subjects. Am. Rev. Respir. Dis. 139:407-415.

Landegren, U. (1984) Measurement of cell numbers by means of the endogeneous enzyme hexosaminidase: applications to detection of lymphokines and cell surface antigens. J. Immunol. Meth. 67:379-388.

Last, J.A., and Greenberg, D.B. (1980) Ozone-induced alterations in collagen metabolism of rat lungs. II. Long-term exposure. Toxicol. Appl. Pharmacol. 55:108-114.

Last, J.A., Hyde, D.M., Guth, D.J., and Warren, D.L. (1986) Synergistic interaction of ozone and respirable aerosols on rat lungs: importance of aerosol acidity. Toxicology 39: 247-257.

Lee, C.T., Fein, A.M., Lippmann, M., Holtzman, H., Kimbel, P., and Weinbaum, G. (1981) Elastolytic activity in pulmonary lavage fluid from patients with adult respiratory distress syndrome. N. Engl. J. Med. 304:192-196.

Leikauf, G., Specktor, D.A., Albert, R.E., and Lippmann, M. (1984) Dose-dependent effects of submicrometer sulfuric acid aerosol on particle clearance from ciliated human lung airways. Am. Ind. Hyg. Assoc. J. 45:285-292.

Lioy, P.J., and Lippmann, M. (1986) Measurement of Exposure to Acidic Sulfur Aerosols, in S.D. Lee et al (eds), Aerosols, Lewis Pub.; pp. 743-752.

Lippmann, M. (1989) Background on health effects of acid aerosols. Environ. Health Perspect. 79:3-6 and 79:203-205.

Menzel, D.B. (1984) Ozone: An Overview of its Toxicity in Man and Animals. J. Toxicol. Environ. Health 12:183-204.

Ming, W.J., Bergani, L., and Mantovani, A. (1987) Tumor necrosis factor is chemotactic for monocytes and polymorphonuclear leukocytes. J. Immunol. 138:1469-1474.

Moncada, S., Palmer, R.M.J., and Higgs, E.A. (1989) The biological significance of nitric oxide formation from L-arginine. Biochem. Soc. Trans. 17:642-644.

Morahan, P.S., Conner, J.R., and Leary, K.R. (1985) Viruses and the versatile macrophage. Br. Med. Bull. 41(1):15-21.

Movat, H.Z., Cybulsky, M.I., Colditz, I.G., Chan, M.K.W., and Dinarello, C.A. (1987) Acute inflammation in gram negative infection: endotoxin, interleukin 1, tumor necrosis factor and neutrophils. Fed. Proc. 46:97-104.

National Research Council. 1989. Airborne Particles University Park Press, Baltimore, MD. Chapter 8.

Peters, S.G., and Hyatt, R.E. (1986) A canine model of bronchial injury induced by nitric acid. Am. Rev. Respir. Dis. 133:1049-1054.

Pick, E., and Keisari, Y. (1981) Superoxide anion and hydrogen peroxide production by chemically elicited peritoneal macrophages. Cell Immunol. 59:301-318.

Postlethwaite, A.E., Keski-Oja J., Balian, G., and Kang, A.H. (1981) Induction of fibroblast chemotaxis by fibronectin. Localization of the chemotactic region to a 140,000 molecular weight non-gelatin binding region. J. Exp. Med. 153:494-499.

Raizenne, M.E., Hargreave, F., Sears, M., Spengler, J., Stern, D., and Burnett, R. (1987) Exercise and lung function responses during an air pollution episode in young females with airway hyperresponsiveness to methacholine. Am. Rev. Resp. Dis. 135: A343.

Rennard, S.I., and Crystal, R.G. (1982) Fibronectin in human bronchopulmonary lavage fluid: evaluation of patients with interstitial lung disease. J. Clin. Invest. 69:113-122.

Rennard, S.I., Hunninghake, G.W., Bitterman, P.B., and Crystal, R.B. (1981) Production of fibronectin by human alveolar macrophages: mechanisms for the recruitment of fibroblasts to sites of tissue injury in interstitial lung diseases. Proc. Natl. Acad. Sci. USA 78:7147-7151.

Reynolds, H.Y. (1983) Lung inflammation: role of endogenous chemotactic factors in attracting polymorphonuclear granulocytes. Am. Rev. Respir. Dis. 127:S16-S25.

Reynolds, H.Y. (1987) Bronchoalveolar lavage. Am. Rev. Respir. Dis. 135:250-263.

Rich, E.A., Tweardy, D.J., Fuijiwara, H., and Ellner, J.J. (1987) Spectrum of immunoregulatory functions and properties of human alveolar macrophages. Am. Rev. Respir. Dis. 136:258-265.

Rose, R.M., Fuglestad, J.M., Skornik, W.A., Hammer, S.M., Wolfthal, S.F., Beck, B.D., and Brain, J.D. (1988) The pathophysiology of enhanced susceptibility to murine cytomegalovirus respiratory infection during short-term exposure to 5 ppm nitrogen dioxide. Am. Rev. Respir. Dis. 137:912-917.

Schlesinger, R.B. (1986) The effects of inhaled acid aerosols on lung defenses, in: Aerosols, Lee, S.D., Schneider, T., Grant, L.D., and Verdeck, P.J. (eds.), Lewis Publishers, Chelsea, MI; pp. 617-635.

Schlesinger, R.B. (1987) Effects of intermittent inhalation exposures to mixed atmospheres of NO_2 and H_2SO_4 on rabbit alveolar macrophages. J. Toxicol. Environ. Health 22:301-312.

Schlesinger, R.B. (1989) Factors affecting the response of lung clearance systems to acid aerosols: Role of exposure concentration, exposure time, and relative acidity. Environ. Health Perspect. 79:121-126.

Schmidt, J.A., Mizel, S.B., Choen, D., and Green I. (1982) Interleukin 1, a potential regulator of fibroblast proliferation. J. Immunol. 128:2177-2182.

Seinfeld, J.H. (1989) Urban air pollution: state of the science. Science 243:745-752.

Seltzer, J., Bigby, B.G., Stulborg, M., Holzman, M.J., Nadel, J.A., Ueki, I.F., Liekauf, G.D., Goetzl, E.J., and Boushey, H.A. (1986) O_3 induced change in bronchial reactivity in methacholine and airway inflammation in humans. J. Appl. Physiol. 60:1321-1326.

Senior, R.M., Tegner, H., Kuhn, C., Ohlsson, K., Storcher, B.C., and Pierce, J.A. (1977) The induction of pulmonary emphysema with human leukocyte elastase. Am. Rev. Respir. Dis. 116:469-475.

Slauson, D.O. (1982) The mediation of pulmonary inflammatory injury. In: Cornelius CE, Simpson CF, eds. Advances in Veterinary Science and Comparative Medicine, 26:99-154. New York:Academic Press.

Speizer, F.E. (1989) Studies of acid aerosols in six cities and in a new multi-city investigation: design issues. Environ. Health Perspect.79: 61-67.

Spektor, D.M., Leikuaf, G.D., Albert, R.E., and Lippmann, M. (1985) Effects of submicrometer sulfuric acid aerosols an mucociliary transport and respiratory mechanics in asymptomatic asthmatics. Environ. Res. 37:174-191.

Spengler, J.D., Keeler, G.J., Koutrakis, P., Ryan, P.B., Raizenne, M., and Franklin, C.A. (1989) Exposures to acidic aerosols. Environ. Health Perspect. 79:43-51.

Spicer, C.W., Howes, J.E., Bishop, T.A., and Arnold, L.H. (1982) Nitric acid measurement methods: an intercomparison. Atmos. Environ. 16:1487-1500.

Stimler, N.P., Hugli, T.E., and Bloor, C.E. (1980) Pulmonary injury induced by C3a and C5a anaphylatoxins. Am. J. Pathol. 100:327-348.

Strong, A.A. (1978) Description of the CLEANS human exposure system. U.S. Environmental Protection Agency document No EPA-600/1-78-064.

Takuma, T., Takeda, K., and Konno, K. (1987) Synergism of tumor necrosis factor and interferon gamma in induction of differentiation of human myeloblastic leukemic ML-1 cells. Biochem. Biophys. Res. Commun. 145:514-521.

Taniguchi, H., Taki, F., Takagi, K., Satake, T., Sugiyama, S., and Ozawa, T. (1986) The role of leukotrine B_4 in genesis of oxygen toxicity in the lung. Am. Rev. Respir. Dis. 133:805-808.

Thurston, G.D., Ito, K., Lippmann, M., and Hayes, C. (1989) Reexamination of London, England, mortality in relation to exposure to acidic aerosols during 1963-1972 winters. Environ. Health Perspect. 79:73-82.

U.S. Environmental Protection Agency, 1982. Air Quality Criteria for Oxides of Nitrogen, EPA document # EPA-600/8-82-026; page 8-73.

Utell, M.J., Morrow, P.E., Speers, D.M., Darling, J., and Hyde, R.W. (1983) Airway responses to sulfate and sulfuric acid aerosols in asthmatics: an exposure-response relationship. Am. Rev. Resp. Dis. 128:444-450.

Utell, M.J. and Morrow, P.E. (1986) Effects of inhaled acid aerosols on human lung function: Studies in normal and asthmatic subjects, in: Aerosols, Lee, S.D., Schneider, T., Grant, L.D., and Verdeck, P.J. (eds.), Lewis Publishers, Chelsea, MI; pp. 671-681.

Utell, M.J. (1985) Effects of inhaled acid aerosols on lung mechanics: An analysis of human exposure studies. Environ. Health Perspect. 63:39-44.

Vilcek, J., Palombella, V.J., Henriksen-DeStefano, D., Swenson, C., Fenman, R., Hirai, M., and Tsujimoto M. (1986) Fibroblast growth enhancing activity of tumor necrosis factor and its relationship to other polypeptide growth factors. J. Exp. Med. 163,632-643.

Von Essen, S.G., Robbins, R.A., Spurzem, J.R., Thompson, A.B., McGranaghan, S.S., and Rennard, S.I. (1991) Bronchoscopy with bronchoalveolar lavage causes neutrophil recruitment to the lower respiratory tract. Am. Rev. Respir. Dis. 144:848-854.

Williams, T.J., and Jose, P.J. (1981) Mediation of increased vascular permeability after complement activation. J. Exp. Med. 153:136-153.

Zucali, J.R., Elfenbein, G.J., Barth, K.C., and Dinarello, C.A. (1987) Effect of human interleukin 1 and human tumor necrosis factor on human T lymphocyte colony formation. J. Clin. Invest. 80:772-777.

CARB LIBRARY
13140