EXECUTIVE ORDER G-70-142-B

EXHIBIT 1

VAPOR RECOVERY EQUIPMENT FOR ABOVEGROUND TANKS WITH 1000 GALLONS OR LESS CAPACITY FILLED BY BOBTAIL TRUCK DELIVERY

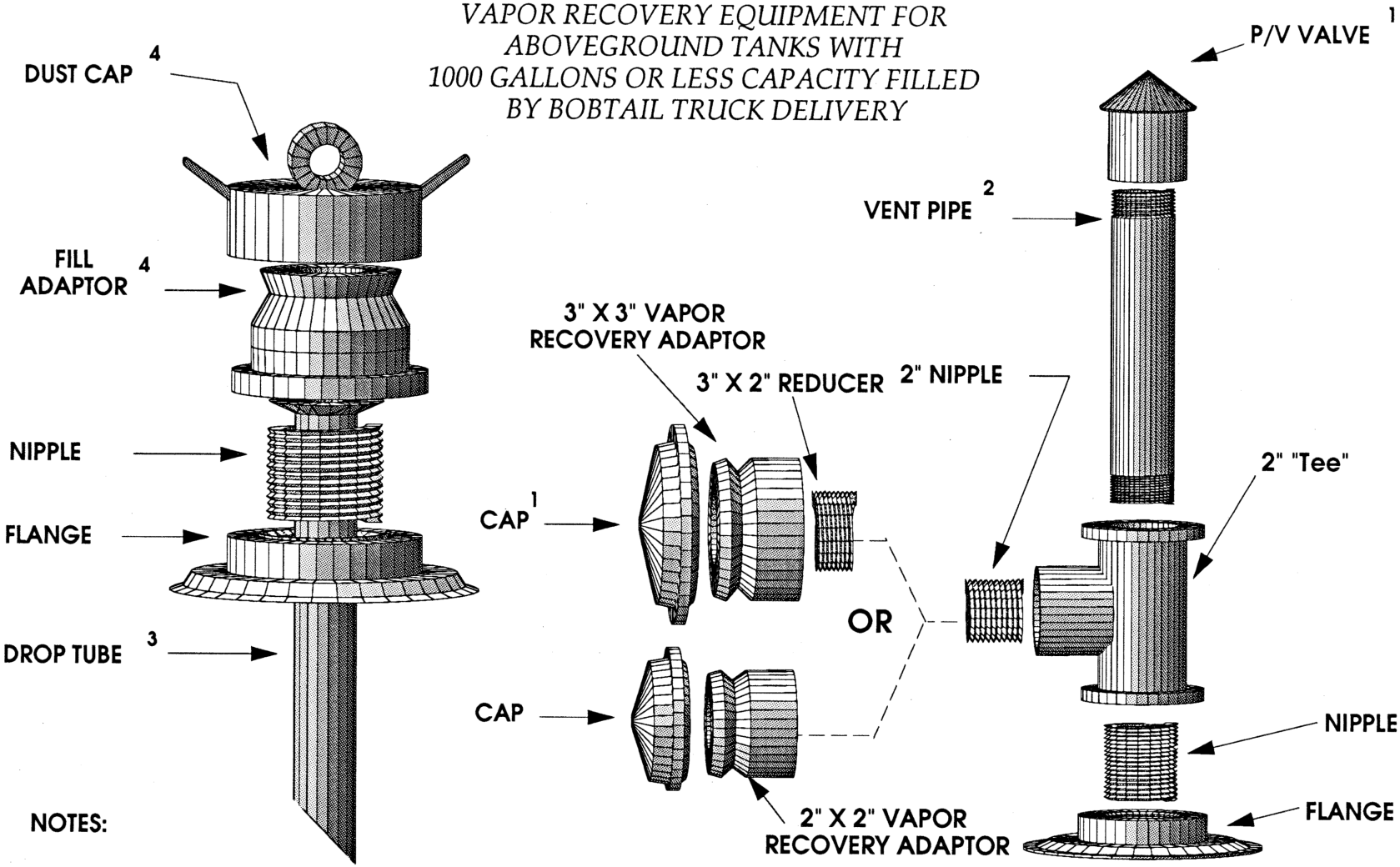

NOTES:

1. See Executive Order G-70-97-A Exhibits 1 and 3 for approved equipment.
2. Vent pipe diameter and use of P/V valve to be approved by local fire district.
3. Sealed aluminum drop tube with a minimum diameter of 1 1/4 inches, flared at top, cut at a 45 degree angle at bottom and extending to within 6 inches of bottom of tank.
4. Fill adaptor and dust cap, OPW 633-A and OPW 634-B, or equivalent, with minimum size of 1 1/4 inches.