Exhibit 2

Executive Order G-70-162-A

Steel Tank Institute
Fireguard Aboveground Tank
Filling/Dispensing Vapor Recovery System

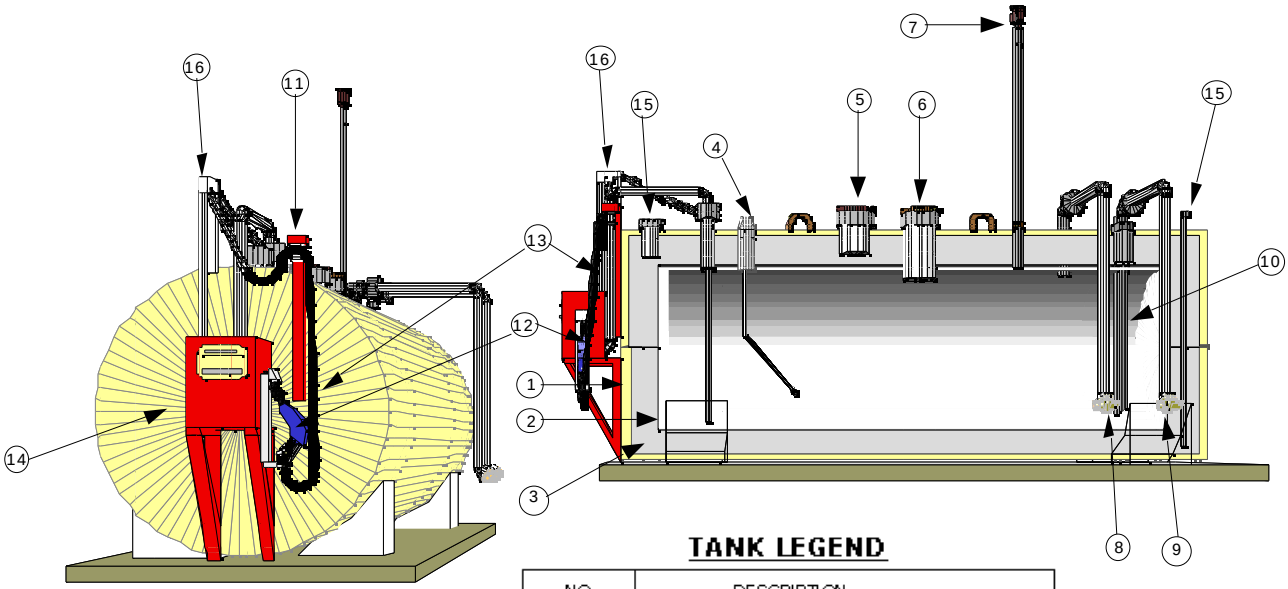

TANK LEGEND

NO.	DESCRIPTION
1	OUTER STEEL TANK
2	INNER STEEL TANK
3	LIGHTWEIGHT INSULATION
4	FLOAT GAUGE
5	ANNULAR SPACE EMERGENCY VENT
6	INNER TANK EMERGENCY VENT
7	PRESSURE VACUUM (P/V) VENT
8	VAPOR ADAPTOR AND CAP
9	FILL ADAPTOR AND CAP
10	SUBMERGED FILL TUBE
11	HOSE RETRACTOR
12	NOZZLE
13	COAXIAL HOSE
14	PUMP
15	ANNULAR SPACE MONITORING ACCESS
16	COAXIAL HOSE ADAPTOR

Notes:

Tank construction shall include a minimum of 3 inches of proprietary insulating material between the interior holding tank and the exterior containment tank. A reduction to a minimum of 2 inches of proprietary insulating material is allowed along the top of the tank.

The tank vent line shall extend to a minimum height of 12 feet above grade.