Executive Order G-70-175

Exhibit 2

Specifications for the Hasstech VCP-3A System

Typical installations of the Hasstech system are shown in Figures 2A-1 through 2A-5.

Nozzles

1. Failure mode testing has demonstrated that blockage of some of the vapor collection holes in the spout has negligible effect on the operation of the system. Any nozzle which has fewer unblocked holes than are required below is defective and shall be immediately removed from service.

Nozzle Type	Total Number of Holes per Nozzle	Minimum Number of *Unblocked* Vapor Holes Required
Emco Wheaton A4500	7	3
Husky V34 6200-	8 (6 in circle around spout, plus 1 higher, and 1 for shutoff aspirator)	1 (must be among the 6)
OPW 11VAI	18 (steel spout) 12 (aluminum spout)	was not determined was not determined

2. An Emco Wheaton A4500 nozzle (Figure 2C) which has any visible puncture or tear of the vapor guard/vapor seal assembly is defective and shall be immediately removed from service.

3. A leaking vapor valve, whether in the nozzle or remotely located, may comprise the vapor recovery capabilities of the entire system; therefore, it is imperative that defective vapor valves be corrected expeditiously in order to minimize emissions.

   The Husky V34 6200-8 nozzle (Figure 2C) has an integral vapor valve which prevents the loss of vapor from the aboveground storage tanks, ensures proper operation of the system and prevents the ingestion of air into the system. Any nozzle with a defective vapor valve shall be immediately removed from service. The integrity of the system shall be restored by replacing the nozzle or otherwise closing the vapor path as soon as practicable.

   The OPW 11VAI nozzle (Figure 2C) and the Emco Wheaton A4500-002 nozzles do not have an integral vapor valve. These nozzles shall be installed with a certified remote vapor valve (i.e., CFC-1 flow control vapor valve) as specified in Exhibit 1 of this Order. Any nozzle associated with a defective remote vapor valve shall be immediately removed from service. The integrity of the system shall be restored by replacing the remote vapor valve or otherwise closing the vapor path as soon as practicable.

4. Nozzles shall be 100 percent performance checked at the factory, including checks of all shutoff mechanisms and of the integrity of the vapor path. The maximum allowable leak rate for nozzles with internal vapor valves during this factory performance test shall not exceed the following:

   0.038 CFH at a pressure of at least two (2) inches water column
   0.005 CFH at a vacuum of at least forty (40) inches water column.

5. Leaded and unleaded spouts are interchangeable.

Flow Actuated Vapor Valves

A flow actuated vapor valve, as listed in Exhibit 1, shall be installed in conjunction with each nozzle which does not have an integral vapor valve. Vapor valves shall be 100 percent performance checked at the factory. The maximum allowable leak rate for vapor valves during this factory performance test shall not exceed the following:

0.038 CFH at a pressure of at least two (2) inches water column
0.005 CFH at a vacuum of at least forty (40) inches water column.

Breakaway Couplings

Breakaway couplings are optional. If they are installed, only certified breakaways with a valve which closes the vapor path when separated shall be used for nozzles with internal vapor valves. Note: a breakaway with a vapor valve that closes upon separation is not required if the CFC-1 flow control valve (or any other remote vapor valve CARB certified with the VCP-3A system) is used because the vapor path remains closed unless there is gasoline flow.

Inverted Coaxial Hoses

1. The maximum length of the hose shall be 14 feet.

2. The length of hose which may be in contact with the island and/or ground when the nozzle is properly mounted on the dispenser is limited to six (6) inches.

Collection Unit (Vapor Pump)

1. The VCP-3A system shall operate with a certified collection unit (pump) specified in Exhibit 1 capable of meeting the air to liquid (A/L) ratio specified below. The A/L ratio of the system, measured at a flowrate of at least six gallons per minute (6 gpm), shall be within the values listed in the following table (linear interpolation may be used to calculate intermediate values). Any fueling point not capable of demonstrating compliance with this performance standard shall be deemed defective and removed from service. The A/L ratio shall be determined by a CARB-approved or district-approved test procedure (Draft procedure TP-201.5 may be used until an A/L ratio test procedure is adopted by CARB). Alternative test procedures may be used if they are determined by the Executive Officer to yield comparable results.

Air to Liquid Ratios

Flow Rate (gpm)	Minimum Ratio	Maximum Ratio
6	1.40	2.40
8	1.40	2.30
10	1.40	2.15

NOTES:

a. The Husky V34 6200-8 nozzle requires a special A/L adapter that will encompass all of the vapor recovery holes; however, test results have indicated that a special A/L adapter is not necessary if the single top hole is covered for the A/L test (refer to Figure 2C).

b. This test procedure returns air rather than vapor to the storage tank, and may cause an increase in storage tank pressure and/or affect process unit operation. Temporary conditions which are attributable to the test are not to be considered an indication of malfunction or noncompliance.

2. No dispensing shall be allowed when the collection unit is disabled for maintenance or for any other reason unless the facility is operating under a district variance or upset/breakdown rule provision.

3. The maximum number of fueling points which can be supported by one collection unit is sixteen (16). This is based on an in-use factor of fifty percent (50% and a demonstration of eight nozzles dispensing 7.5 gallons simultaneously with an A/L ratio greater than 1.4. Additional fueling points require an additional collection unit (one per sixteen additional fueling points).

4. OSHA-approvable access to the collection unit shall be provided immediately upon request for maintenance, inspection and/or testing.

5. The local district may require the installation of a tap at least 1/8" NPT be provided on the inlet and outlet side of the collection unit. The taps shall remain plugged and vapor tight except when test equipment is being connected or removed. Air ingestion and/or vapor loss associated with connecting or removing test equipment shall be minimized. The vacuum level at the inlet of the collection unit can be adjusted by changing the size of the by-pass orifice. The normal operating level at this point shall be minus 30 to 40 inches water column.

   Note: Changing the length of the hoses or the number of installed nozzles may affect the vacuum level and require adjustment of the by-pass orifice.

<u>Processing Unit (burner)</u>

1. The Hasstech VCP-3A Processing Unit consists of an in line flame arrestor, an in-line pressure switch, a solenoid activated vapor valve, another flame arrestor, and a single stage burner assembly with electronic ignition and a flame detector (refer to Figure 2B-1).

2. At no time shall emissions from the processing unit exceed Ringelmann one-half ($^1/_2$) or ten percent (10%) opacity. Note: visible emissions, except water vapor or heat waves, may indicate improper burner operation unless associated with a Phase I fuel delivery.

3. The horizontal distance between the pressure/vacuum valve and the processing unit shall be not less than twenty (20) feet. The processing unit shall be installed in accordance with the manufacturer's installation manual.

4. Twenty (20) <u>consecutive</u> unsuccessful attempts to ignite the process unit shall cause the process unit to lock out and the alarm to be activated. This condition would most likely represent a broken flame sensor or a defective ignitor. When this condition has occurred, it shall be deemed a failure of the process unit.

5. Twenty (20) <u>non-consecutive</u> unsuccessful attempts to ignite the process unit shall cause the alarm shall be activated but shall allow the process unit to continue to operate. The reason to allow the process unit to operate is that the failed ignition attempts may not represent a defective process unit. The alarm is activated so that the station operator is alerted to have the unit checked out for a possible problem.

6. No dispensing shall be allowed when the process unit is disabled for maintenance or for any other reason unless the facility is operating under a district variance or upset/breakdown rule provision.

7. OSHA-approvable access to the process unit shall be provided immediately upon request for maintenance, inspection and/or testing.

8. The location of the process unit shall be subject to the approval of the local fire authority.

ECS-1 Electronic Control and Status Panel

1. The VCP-3A system shall have an operable ECS-1 control and status panel (refer to Figure 2B-3). The ECS-1 status panel shall have clearly labeled indicators, which light to indicate when the collection unit and process unit are operating. The VCP-3A system may be differentiated from previous versions of the VCP-2A by the ECS-1 control and status panel serial numbers greater than VR-00848 and process unit serial numbers greater than PR00908. No other versions of these components shall be used with the VCP-3A system. Note: This status panel has "YES", "NO" and "Reset" buttons. Previous versions of the status panel, not for use with the VCP-3A system, do not have the "Reset" button:

2. The status panel shall record and store for 365 days the total number of minutes per day that the Process Unit ("PR") senses the presence of a flame and the total number of minutes per day that the solenoid valve to the burner ("SO") is open. This shall be determined on the basis of data points taken at least every 0.5 seconds. This information shall be accessible by pressing the "YES" button on the status panel. The ratio of PR/SO time which indicates that the system is operating properly shall be not less than 0.90.

3. Each ECS-1 electronic and control status panel shall have instructions readily available to station personnel on how to operate the panel. These instructions shall include the service code numbers for the alarm mode and the normal mode (alarm light emitting diode not lit).

4. The ECS-1 panel shall display "CALL FOR SERVICE" when the number of unsuccessful attempts to ignite the burner in a twenty-four hour period reaches twenty.

5. The status panel shall also indicate the system status, either by displaying "SYSTEM NORMAL" (indicating that the FLAME/VALVE ratio is in the normal operating range as specified above) or by displaying the message "CALL FOR SERVICE".

Audible Alarm

1. The VCP-3A system shall include an audible alarm which shall sound if any of the following conditions have occurred:

   a. The gasoline dispenser has been activated for two seconds without causing activation of the collection unit;

   b. the processing unit has made twenty (20) consecutive unsuccessful attempts to ignite; or

   c. the processing unit has made twenty (20) non-consecutive unsuccessful attempts to ignite in a 24 hour period.

   If the alarm sounds, the manual reset shall be used to restart the system. If the alarm sounds again within several hours, the unit is presumed to be malfunctioning and a call for service shall be made.

2. The audible alarm shall be located such that it can easily be heard by station personnel in the area most likely to be occupied during normal station operation (i.e., at the cash register.)

Tank Pressure Switch

The VCP-3A system contains two pressure switches designed to activate the system. The in-line pressure switch, located in the processing unit, shall be set to activate at a nominal inlet pressure of 1 inch water column. The second pressure switch (Part Number PST-1) shall be installed on the tank outlet of the collection unit. The purpose of the tank pressure switch is to monitor the storage tank pressure and to activate the system if the tank pressure exceeds plus 1.0 inches of water column. During

normal operations, the VCP-3A system maintains storage tank pressures in the range of minus 0.5 to plus 1.0 inches of water column. This range is occasionally exceeded briefly due to peak activity periods or bulk fuel delivery operations. Pressures which are consistently outside of this range may indicate system malfunction.

Pressure/Vacuum Valves for Storage Tanks

1. Pressure/vacuum (P/V) relief valves shall be installed as required by Title 8, California Code of Regulations (General Industry Safety Orders).

Vapor Recovery Piping Configurations

1. All vapor return lines shall slope a minimum of 1/8 inch per foot. A slope of 1/4 inch or more per foot is recommended wherever feasible.

2. The dispenser shall be connected to the riser with either flexible or rigid material which is listed for use with gasoline. The dispenser-to-riser connection shall be installed so that any liquid in the lines will drain toward the condensate collection pipe "pot" or drop out tank. The internal diameter of the connector, including all fittings, shall not be less than five-eighths inch (5/8").

3. The nominal inside diameter of the belowground and aboveground vapor lines shall be two inches (2"). All vapor lines shall allow unobstructed passage of vapor as appropriate in normal operation of the system. The vapor return lines shall be installed as shown in Figures 2A-1, 2A-2 and 2A-3.

4. All vapor return and vent piping shall be, at a minimum, installed in accordance with the manufacturer's instructions and all applicable regulations. Local districts may impose additional requirements.

Condensate Trap Piping Configuration

The vapor piping shall have a natural drainage of condensate to a drop out tank or pipe pot to ensure that the intended path of vapors is not subjected to liquid blockage as shown in Figures 2A-1, 2A-2 and 2A-3. The drain check as shown in Figures 2A-2 and 2A-3 is designed to be normally flooded with product (Figure 2A-5). The District may require the use of a pipe pot condensate trap which is self-evacuating (as shown in Exhibit 2A-6), vapor tight and accessible for inspection. If a district elects to allow a condensate trap which is not self evacuating, the district may require the station operator to maintain a log documenting regular evacuation of the condensate trap to ensure that these devices do not block the vapor path. Note: Local districts may require the introduction of liquid into vapor lines before conducting air to liquid ratio tests to verify natural drainage.

Storage Tank and Phase I System

WARNING: Phase I fill caps should be opened with caution because the storage tank may be under pressure.

1. The local district may require the installation of a threaded tap at least 1/8" in diameter at which the aboveground storage tank (AGT) pressure may be monitored. The tap may be in the dispenser riser connection or on the vent valve, and shall be accessible for connection to a pressure gauge. One tap is adequate for manifolded systems. The tap shall remain plugged and vapor tight except when test equipment is being connected to or removed from it. The system shall not be allowed to operate when the taps are not vapor tight. If located on the vent line, the tap shall be a least six feet (6') and not more than eight feet (8') above grade. A high quality quick-disconnect fitting with a vapor tight cap may be installed instead of a plug if specified by the district.

Note: Frequent venting (except when caused by air ingested into the system during the performance of the A/L ratio test, Phase I activities, or other events not specifically caused by the Phase II system) may indicate system malfunction.

2. The Phase I system shall be a CARB-certified system which is in good working order and which demonstrates compliance with the static pressure decay test criteria contained in Exhibit 3 of this Order.

3. The Phase I vapor recovery system shall be operated during product deliveries so as to minimize the loss of vapors from the facility storage tank which may be under pressure. There shall be no less than one vapor return hose connected for each product being delivered. Provided it is not in conflict with established safety procedures, this may be accomplished in the following manner:

   a. The Phase I vapor return hose is connected to the delivery tank and to the tank vapor recovery adapter prior to opening the vapor path to the storage tank;

   b. The delivery tank is opened only after all vapor connections have been made and is closed before disconnecting any vapor return hoses;

   c. The existing Phase I equipment is in good working order and has demonstrated compliance with static pressure decay test criteria; and

   d. The vapor return hose is disconnected from the facility storage tank before it is disconnected from the delivery tank.

4. Storage tanks and piping shall be maintained white, silver or beige. Colors which will similarly prevent heating of the system due to solar gain may also be used, provided they are listed in the EPA AP-42 publication as having a factor the same as or better than that of the colors listed above.

Executive Order G-70-175
Figure 2A-1
Aboveground Tank V/R Installation (Typical)

NOTES:

1. VAPOR COLLECTION UNIT DRAWS VAPORS FROM THE ISLANDS AND PUSHES THEM INTO THE TANKS.
2. VAPOR PROCESSOR FLARES EXCESS VAPOR. THUS KEEPING STORAGE TANK PRESSURE BELOW THE RELIEF SETTING OF THE PRESSURE/VACUUM VALVE.
3. 30" LOOP IN PIPE PREVENTS PRODUCT BACK-FLOW IN EVENT OF STORAGE TANK OVERFILL.
4. GAUGE GIVES CONTINUOUS INDICATION OF SYSTEM PRESSURE STATUS. (OPTIONAL)
5. "POT" IS AN ACCESSIBLE CLEANOUT FOR CONDENSATE AT EACH LOW POINT.
6. 50 FOOT MINIMUM FROM CONTAINMENT STRUCTURE FOR LESSER DISTANCES SEE SECT. 1918.63 CALIF. STATE FIRE MARSHAL REGULATIONS.
7. EMERGENCY VENTS TO BE VAPOR TIGHT AND MEET REQUIREMENTS OF NFPA-30(1984). APPENDIX A.
8. SYSTEM TO BE INSTALLED AND USED IN CONFORMANCE WITH TITLE 8 (CAL OSHA) REGULATIONS

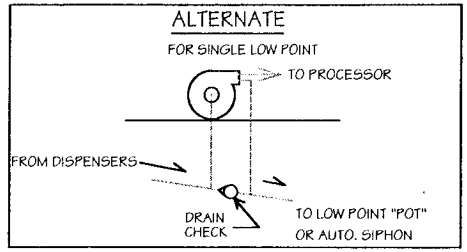

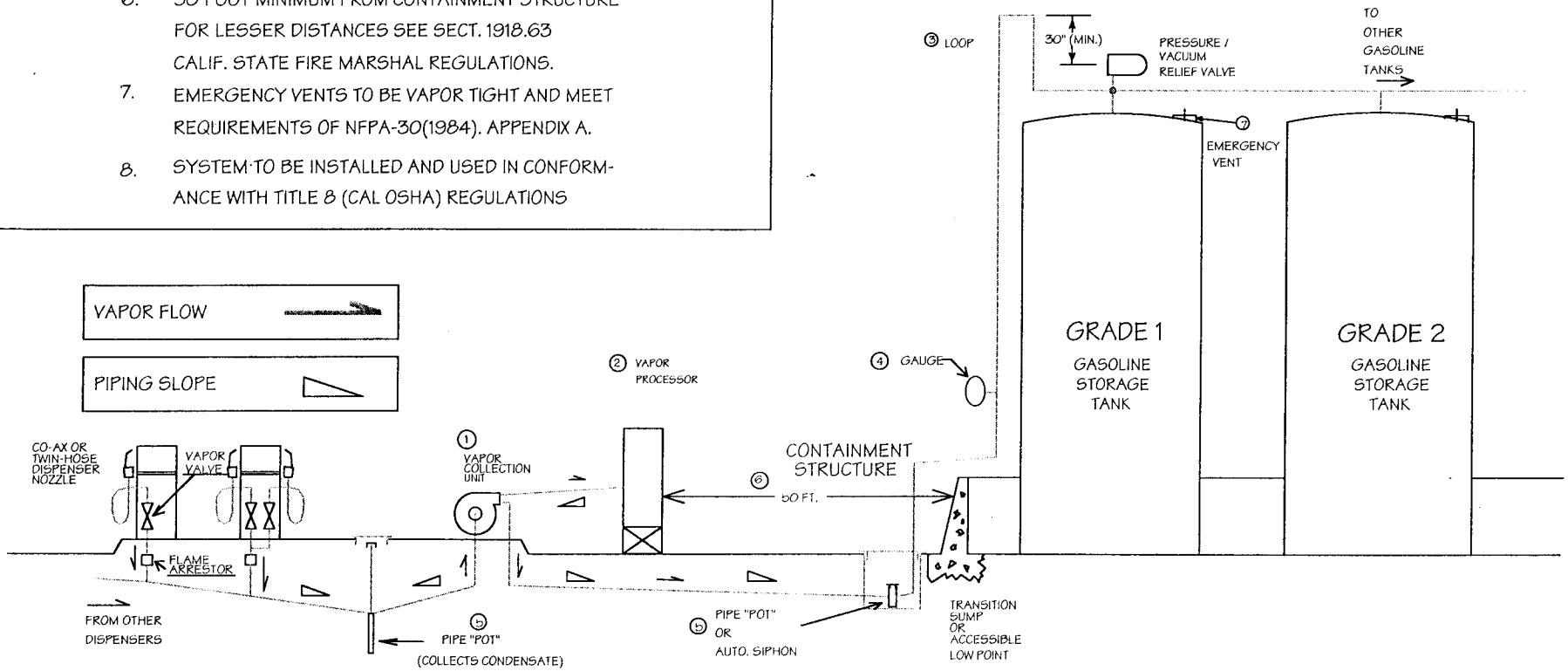

Executive Order G-70-175
Figure 2A-2
AST V/R Piping Schematic (Typical)

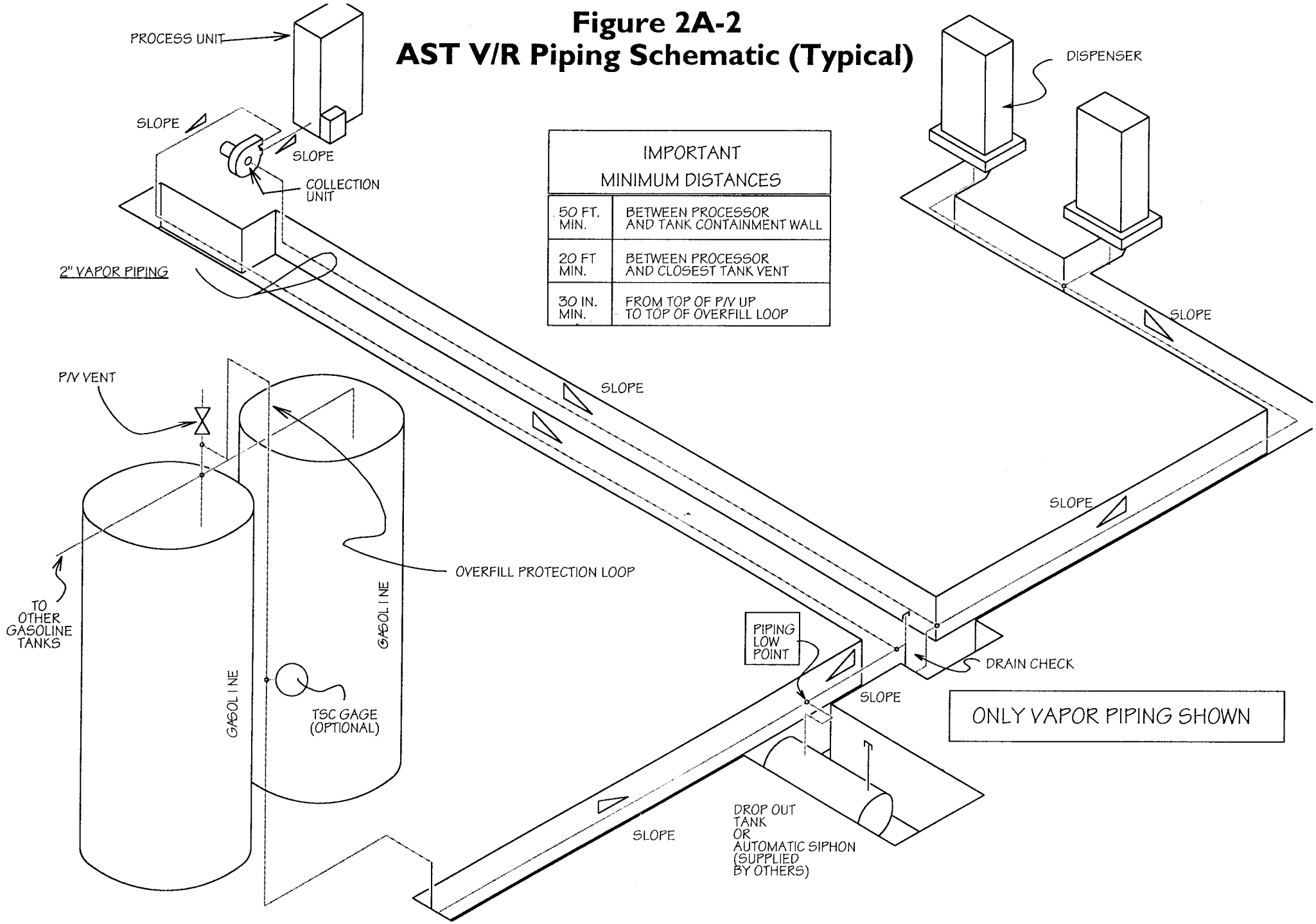

IMPORTANT MINIMUM DISTANCES	
50 FT. MIN.	BETWEEN PROCESSOR AND TANK CONTAINMENT WALL
20 FT MIN.	BETWEEN PROCESSOR AND CLOSEST TANK VENT
30 IN. MIN.	FROM TOP OF P/V UP TO TOP OF OVERFILL LOOP

Executive Order G-70-175
Figure 2A-3
Vapor Recovery Piping Schematic (Typical)

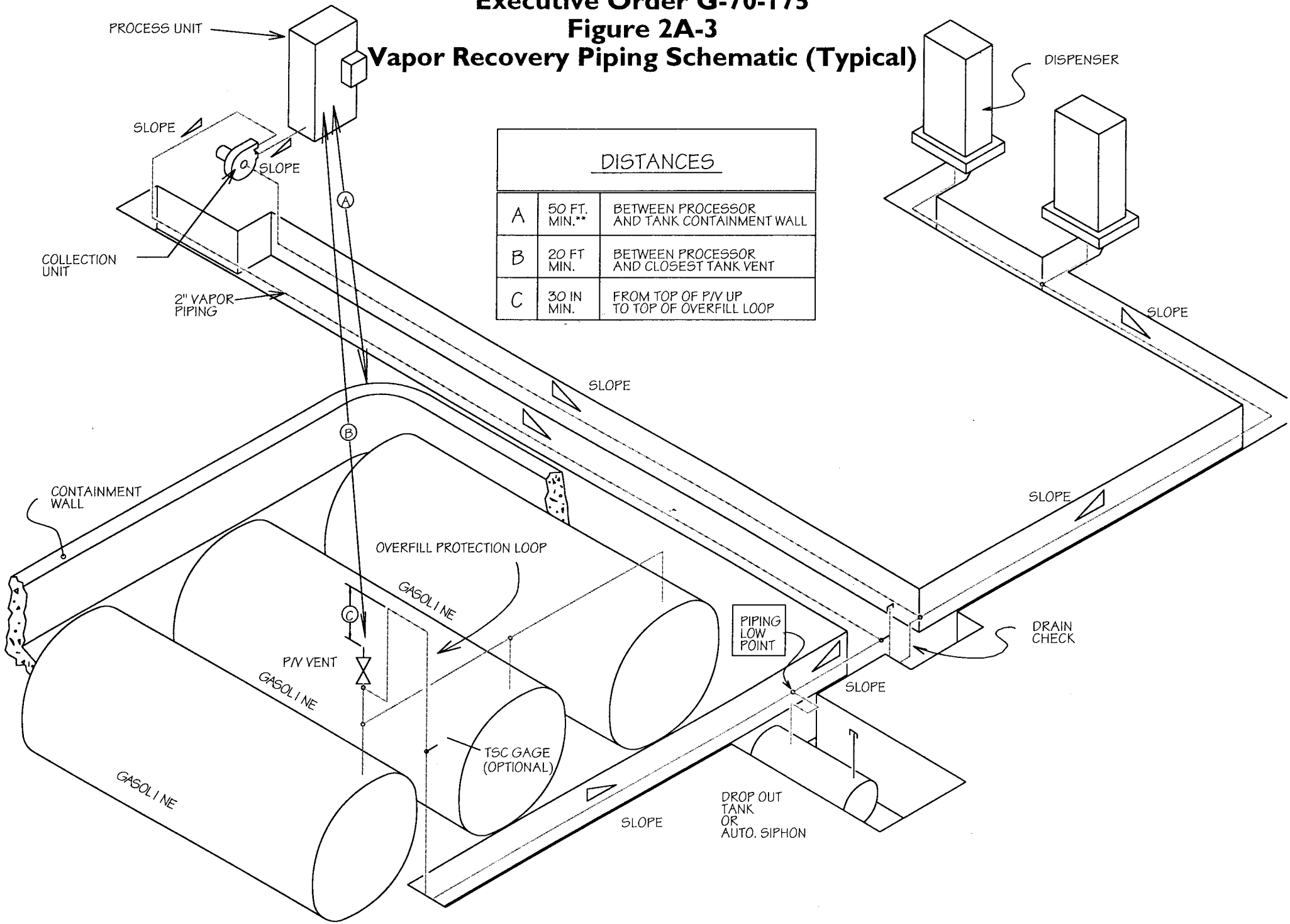

DISTANCES		
A	50 FT. MIN.**	BETWEEN PROCESSOR AND TANK CONTAINMENT WALL
B	20 FT MIN.	BETWEEN PROCESSOR AND CLOSEST TANK VENT
C	30 IN MIN.	FROM TOP OF P/V UP TO TOP OF OVERFILL LOOP

Executive Order G-70-175
Figure 2A-4
Out of Tank Drain Check

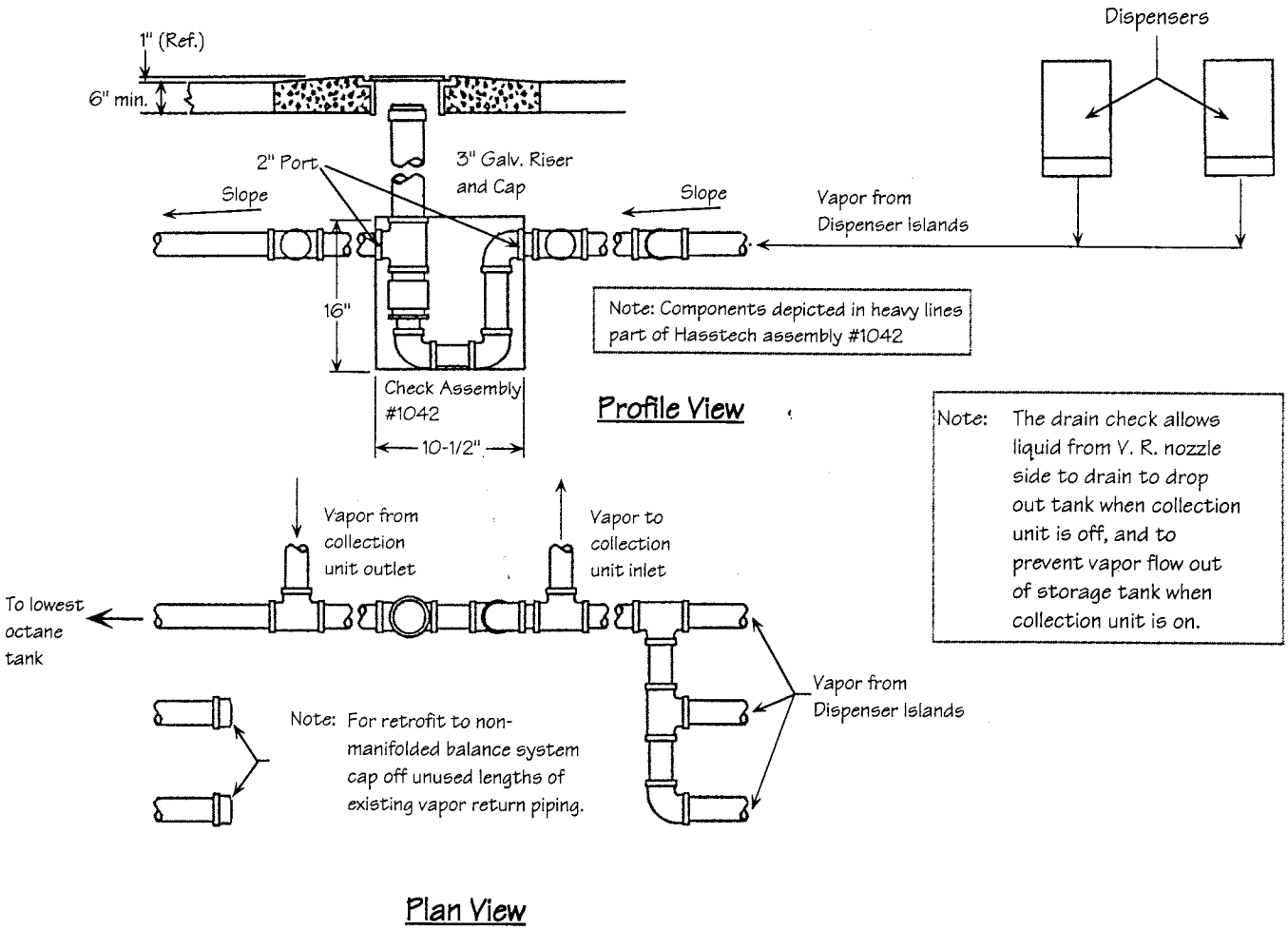

Executive Order G-70-175

Figure 2A-5
Automatic Low Point Liquid Clearing Device (Typical)

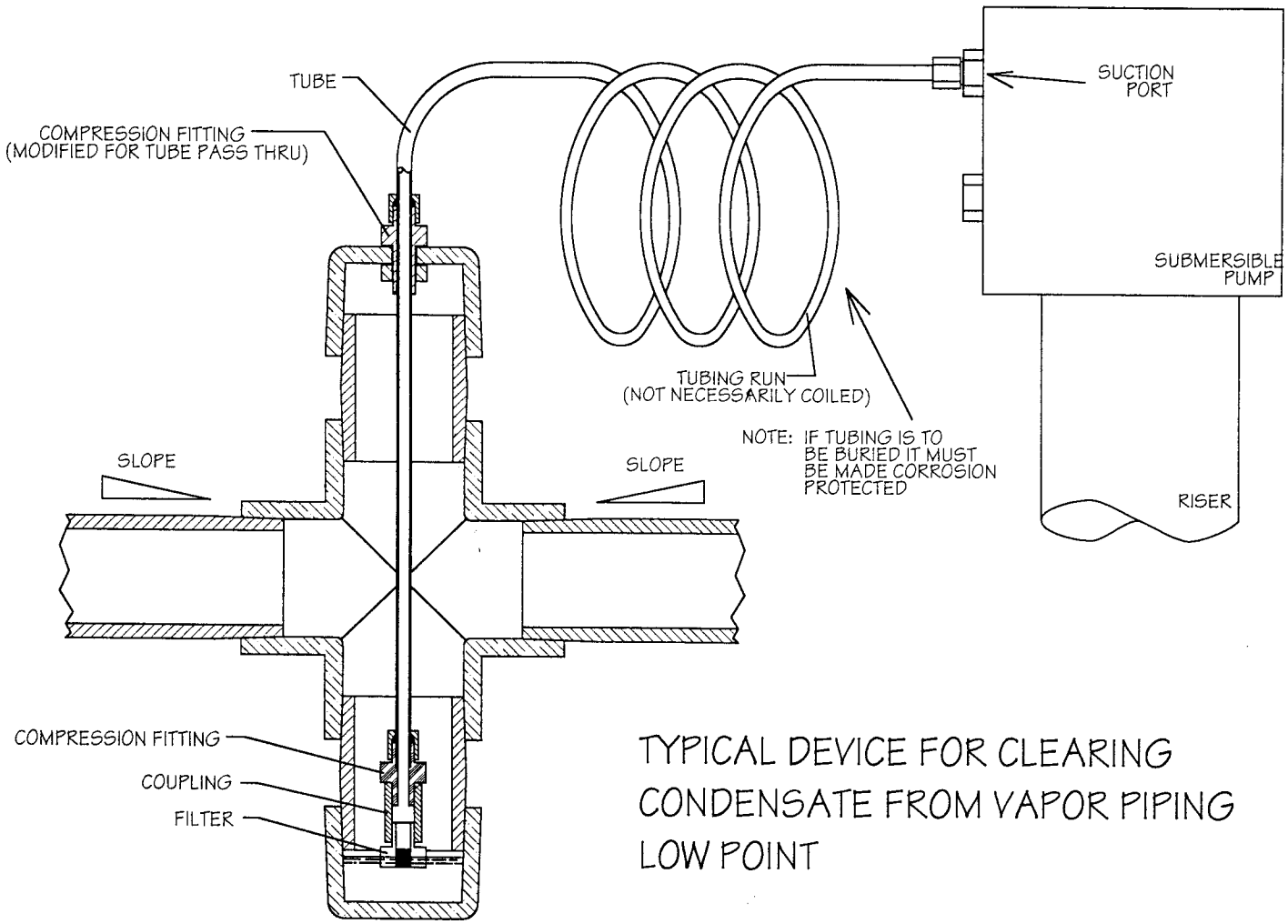

TYPICAL DEVICE FOR CLEARING CONDENSATE FROM VAPOR PIPING LOW POINT

Executive Order G-70-175

Figure 2B-1
Processing Unit

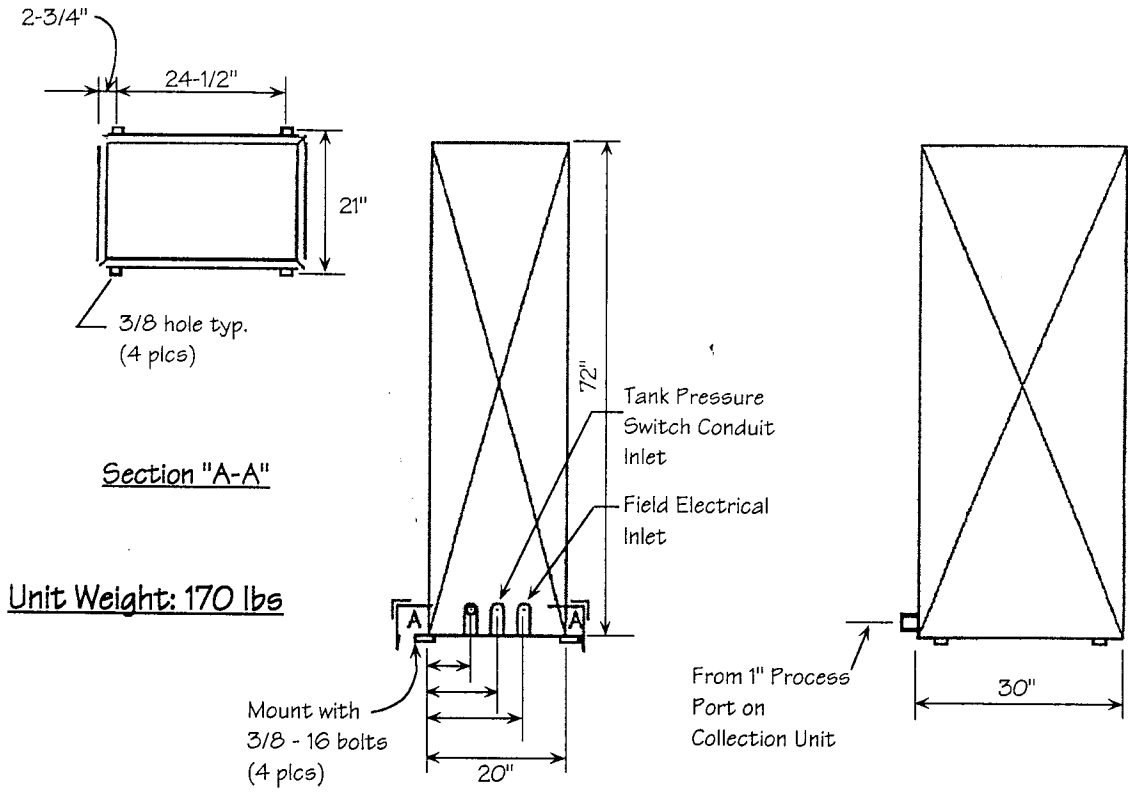

Executive Order G-70-175

Figure 2B-2
Collection Unit Detail

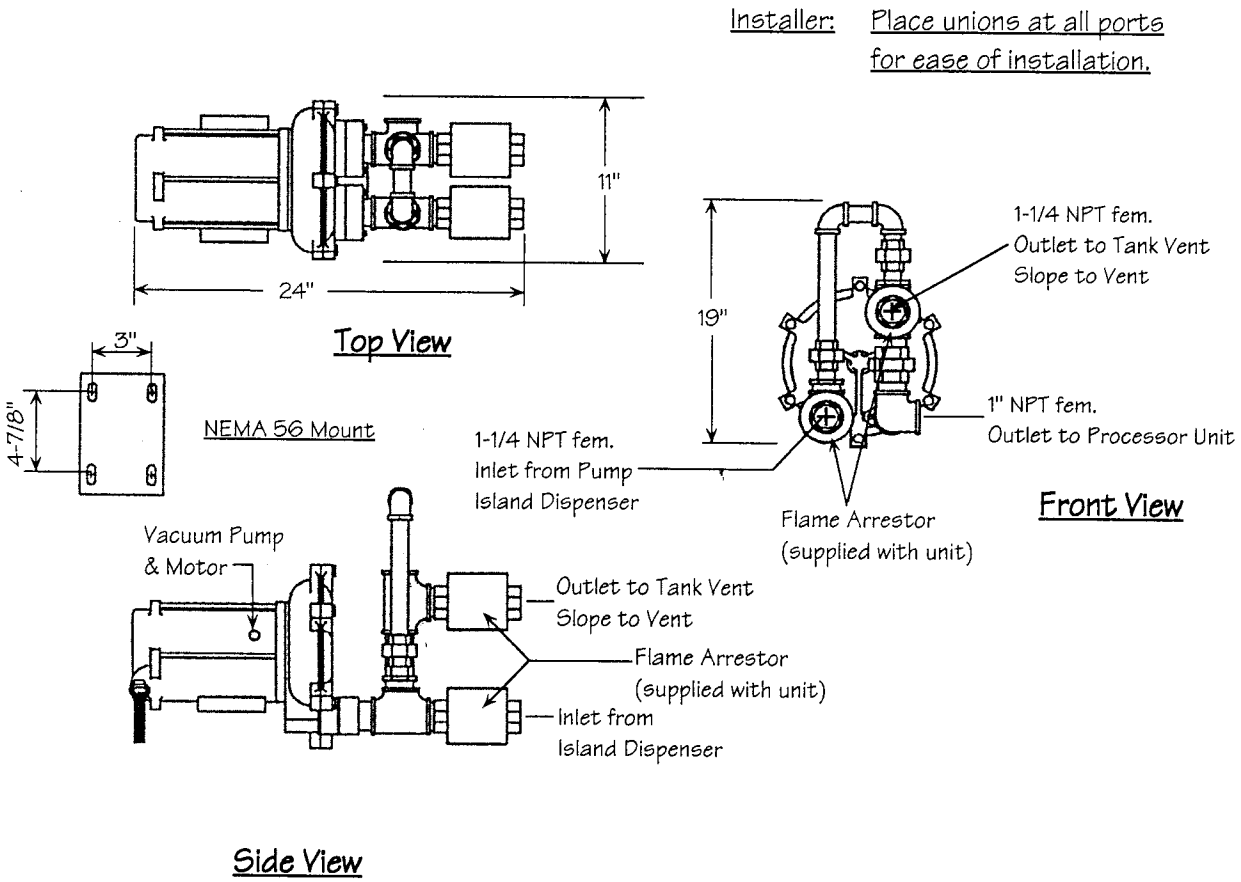

Executive Order G-70-175

Figure 2B-3
Control Panel

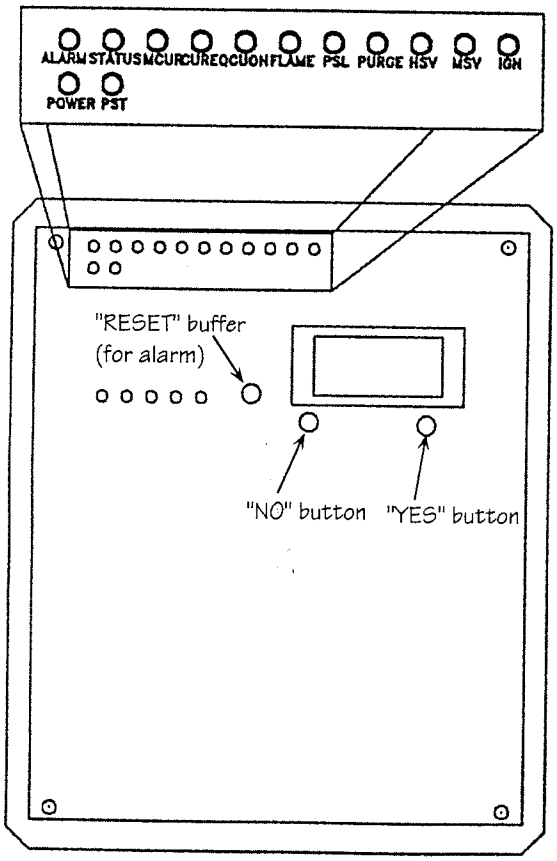

Key to LEDs:

ALARM =>Alarm Condition
CUON =>Collection Unit Active
CUREQ =>Dispenser Active
FLAME =>Processing Vapors
HSV =>High Volume Processing
IGN =>Initiate Processing
MCUR =>Collection Unit Sensor
MSV => Main Processor Valve Open
POWER =>Panel Power
PSL =>Processor Pressure
PST =>Tank Ullage Pressure
PURGE =>Clearing Lines
STATUS =>Not Used

Executive Order G-70-175

Figure 2B-4
Tank Pressure Switch

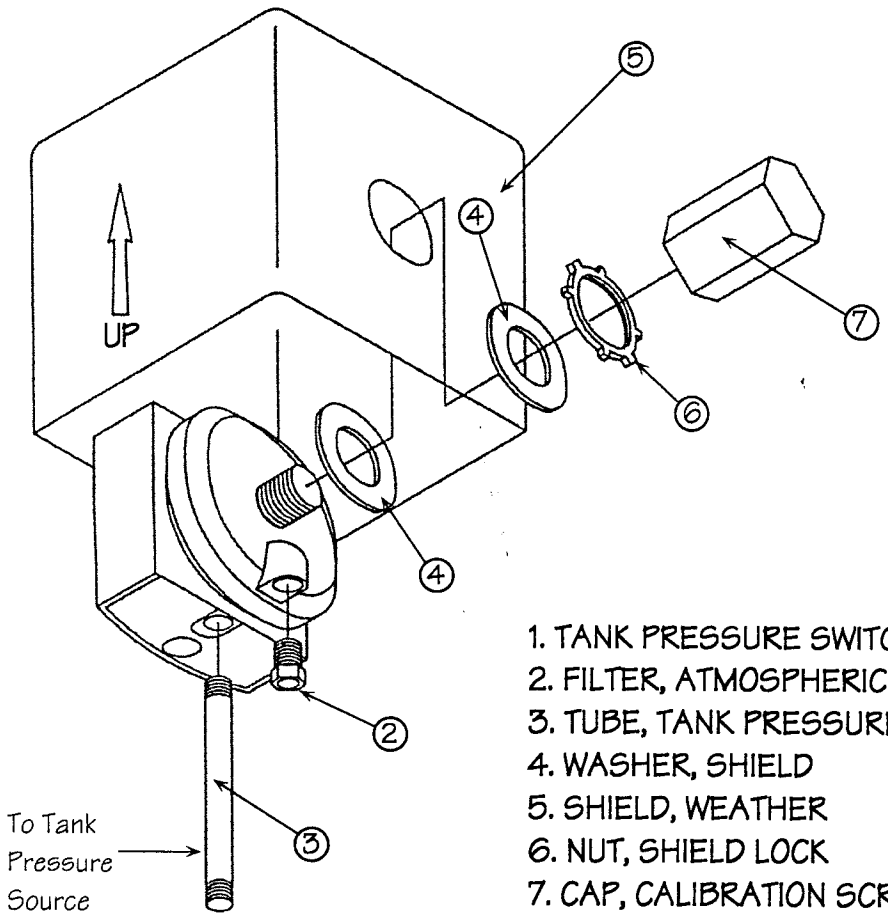

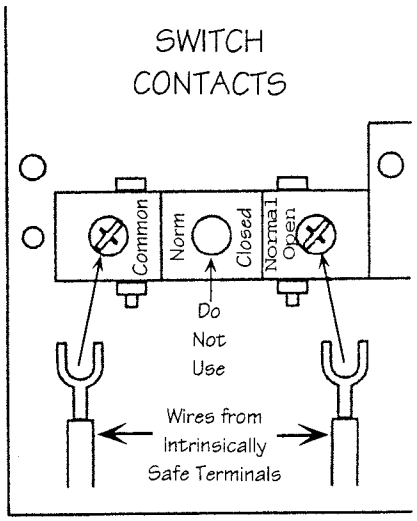

SWITCH
ELECTRICAL
CONNECTIONS

1. TANK PRESSURE SWITCH
2. FILTER, ATMOSPHERIC
3. TUBE, TANK PRESSURE
4. WASHER, SHIELD
5. SHIELD, WEATHER
6. NUT, SHIELD LOCK
7. CAP, CALIBRATION SCREW

<u>ORIENTATE AS SHOWN</u>

Executive Order G-70-175

Figure 2B-5
Standard Installation

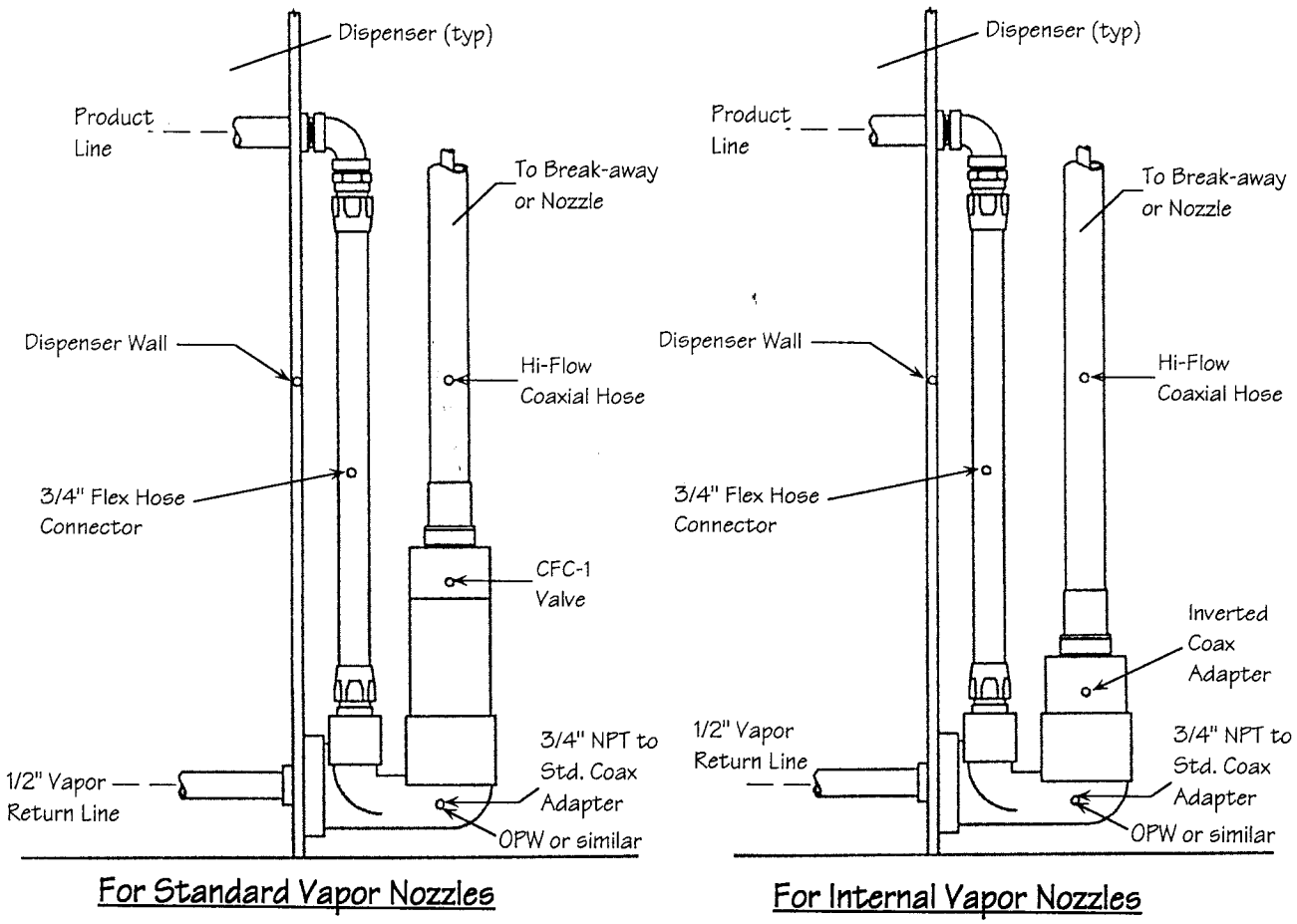

Executive Order G-70-175

Figure 2B-6
Multi-Product Dispenser Installation

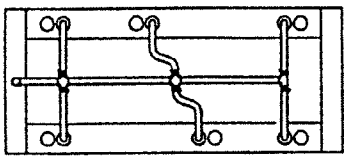

Vapor Plumbing Layout (typ)

Note:
Only Vapor Lines Shown for Clarity

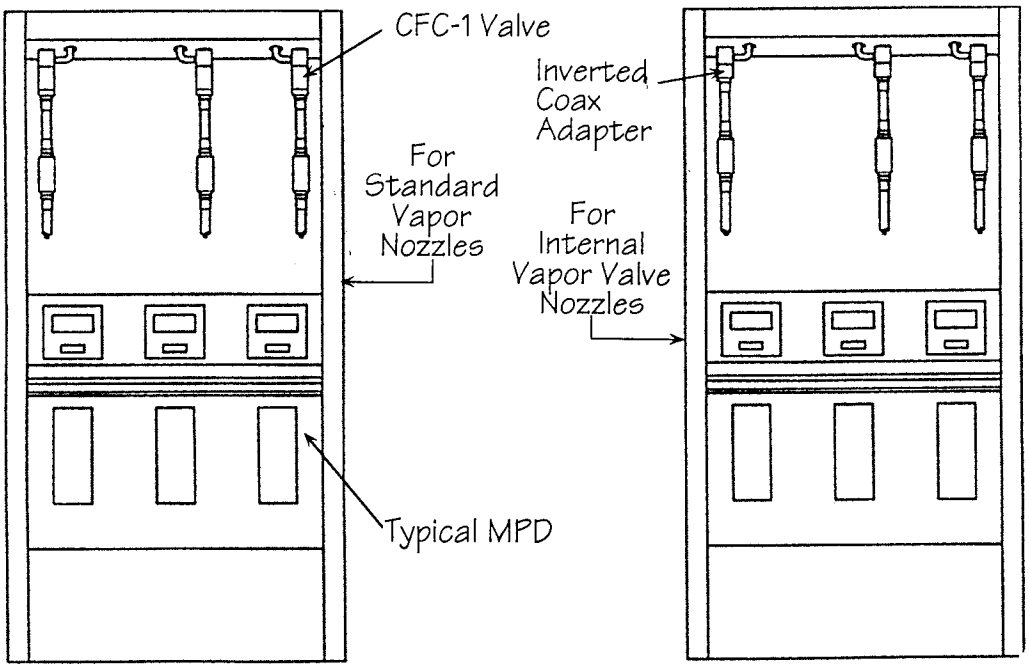

Executive Order G-70-175
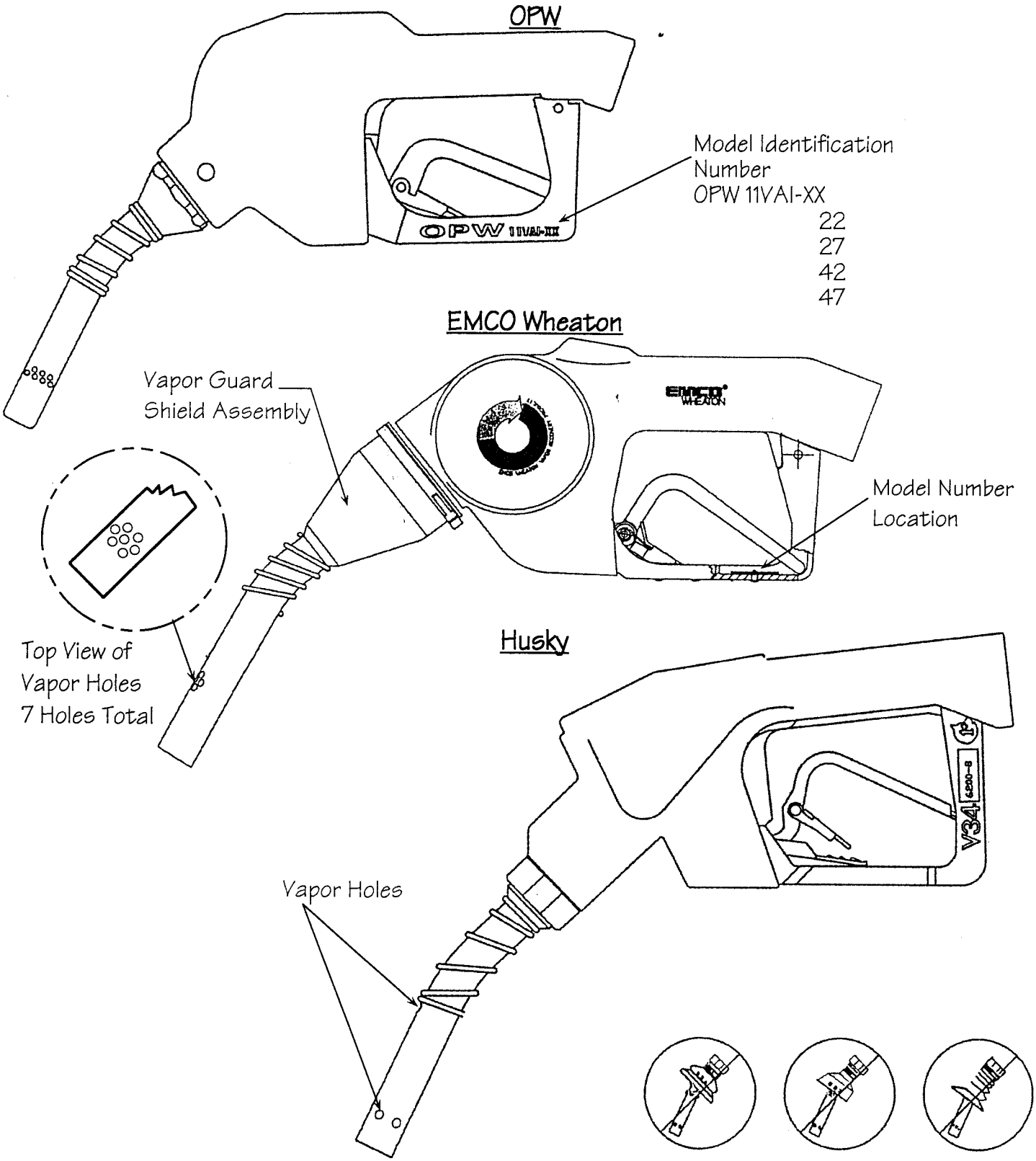
Figure 2C
OPW 11VAI Nozzle, Emco Wheaton A4500 Nozzle and the Husky V34 6200-8 Nozzle