Executive Order G-70-175
Figure 2A-3
Vapor Recovery Piping Schematic (Typical)

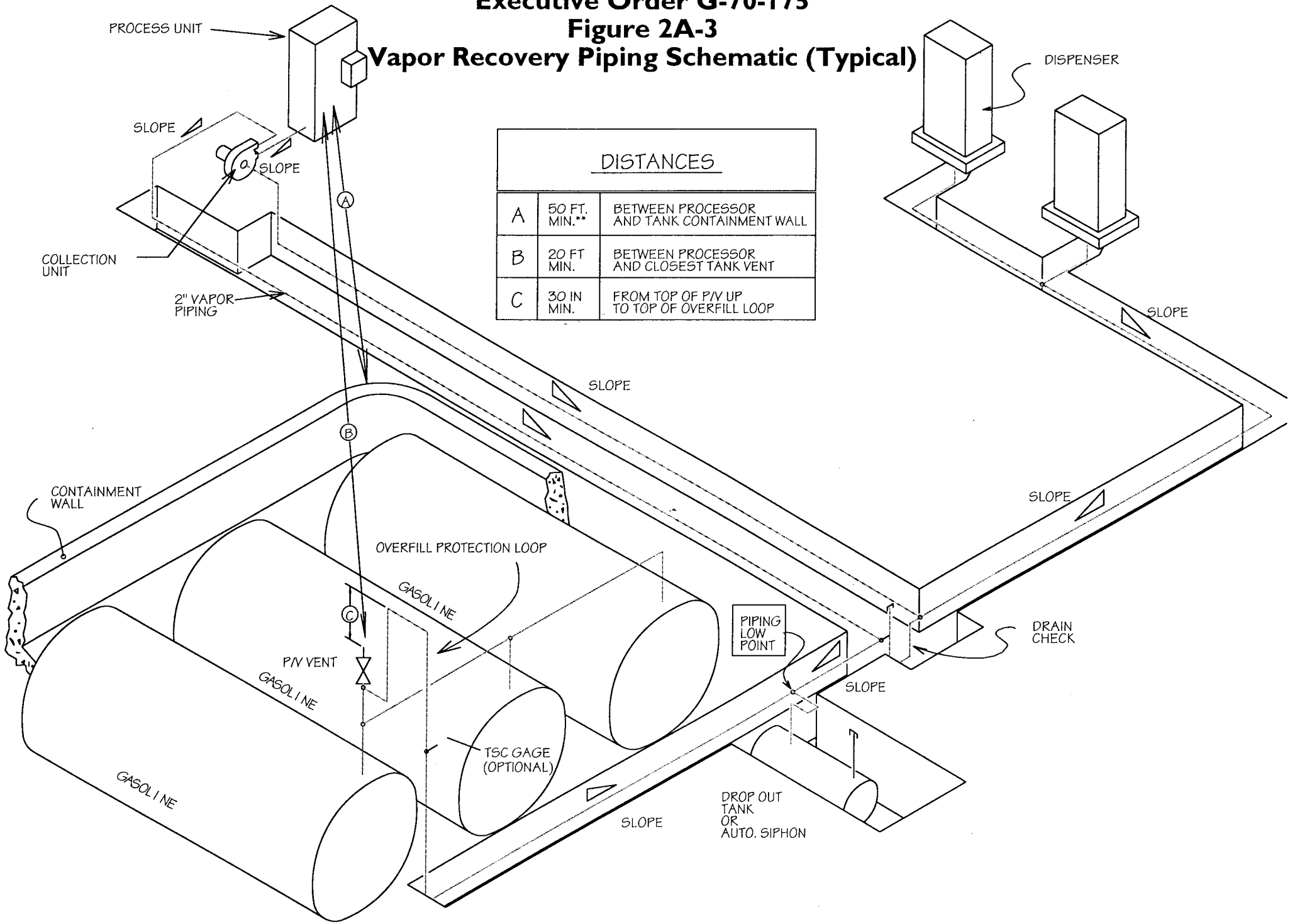

DISTANCES		
A	50 FT. MIN.**	BETWEEN PROCESSOR AND TANK CONTAINMENT WALL
B	20 FT MIN.	BETWEEN PROCESSOR AND CLOSEST TANK VENT
C	30 IN MIN.	FROM TOP OF P/V UP TO TOP OF OVERFILL LOOP