Executive Order G-70-175

Figure 2A-5
Automatic Low Point Liquid Clearing Device (Typical)

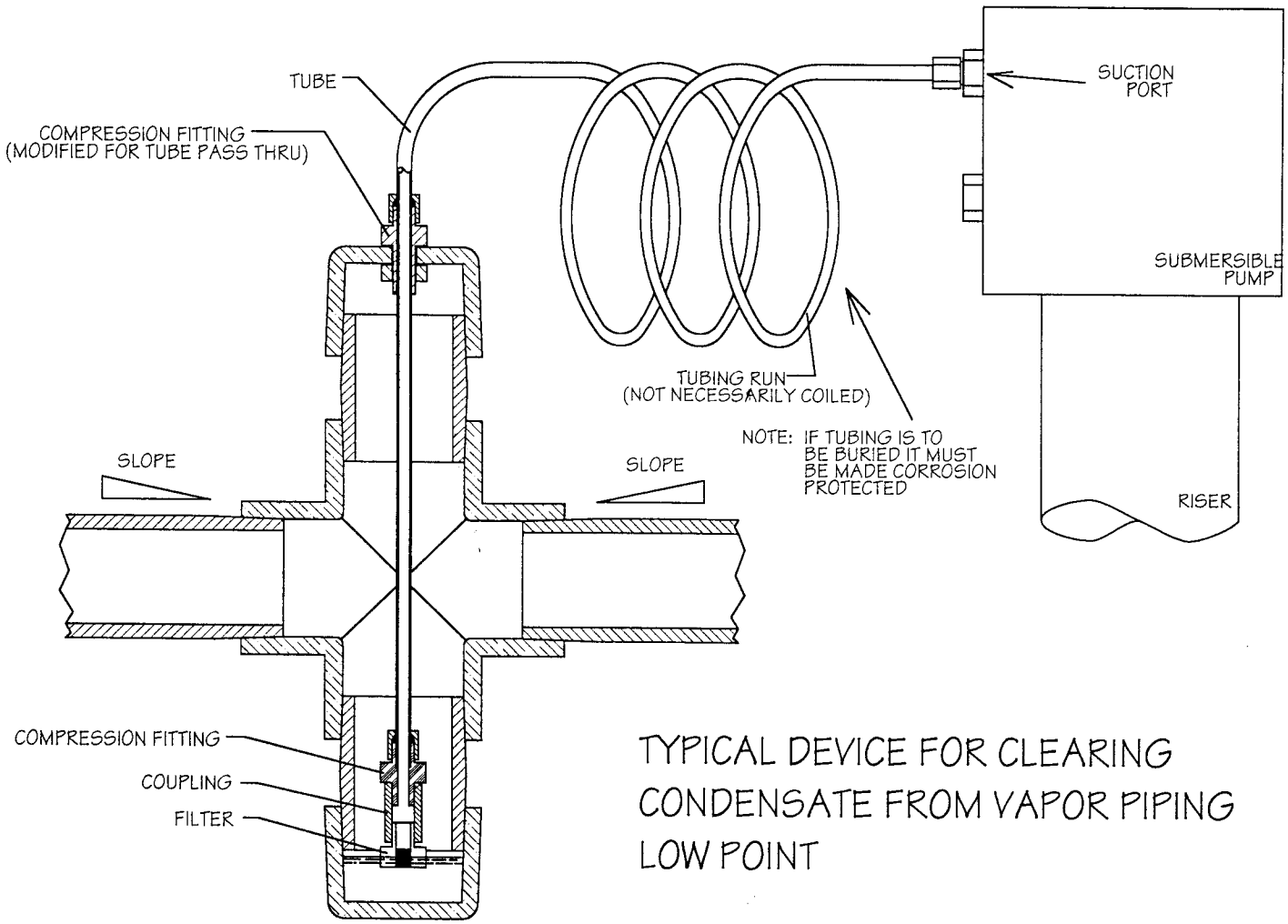

TYPICAL DEVICE FOR CLEARING CONDENSATE FROM VAPOR PIPING LOW POINT