Executive Order G-70-175
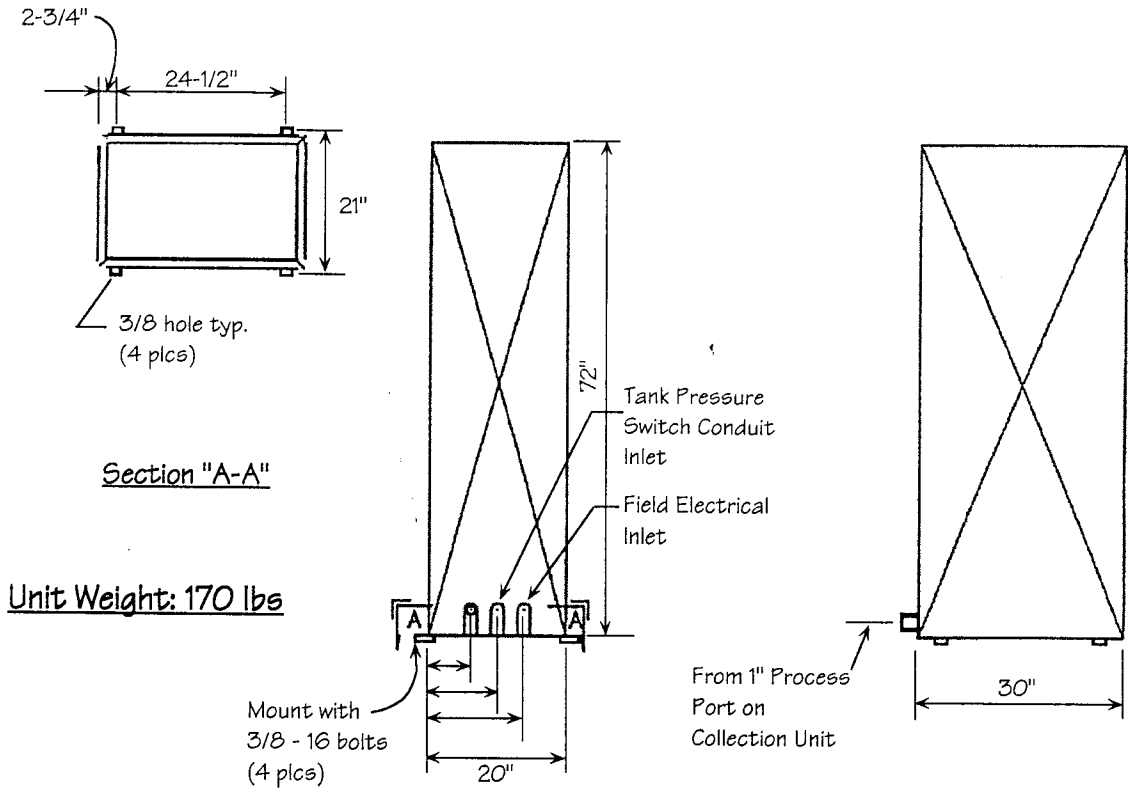
Figure 2B-1
Processing Unit