Exhibit 1

Top Mount Aboveground Tank
Phase II Vapor Recovery System

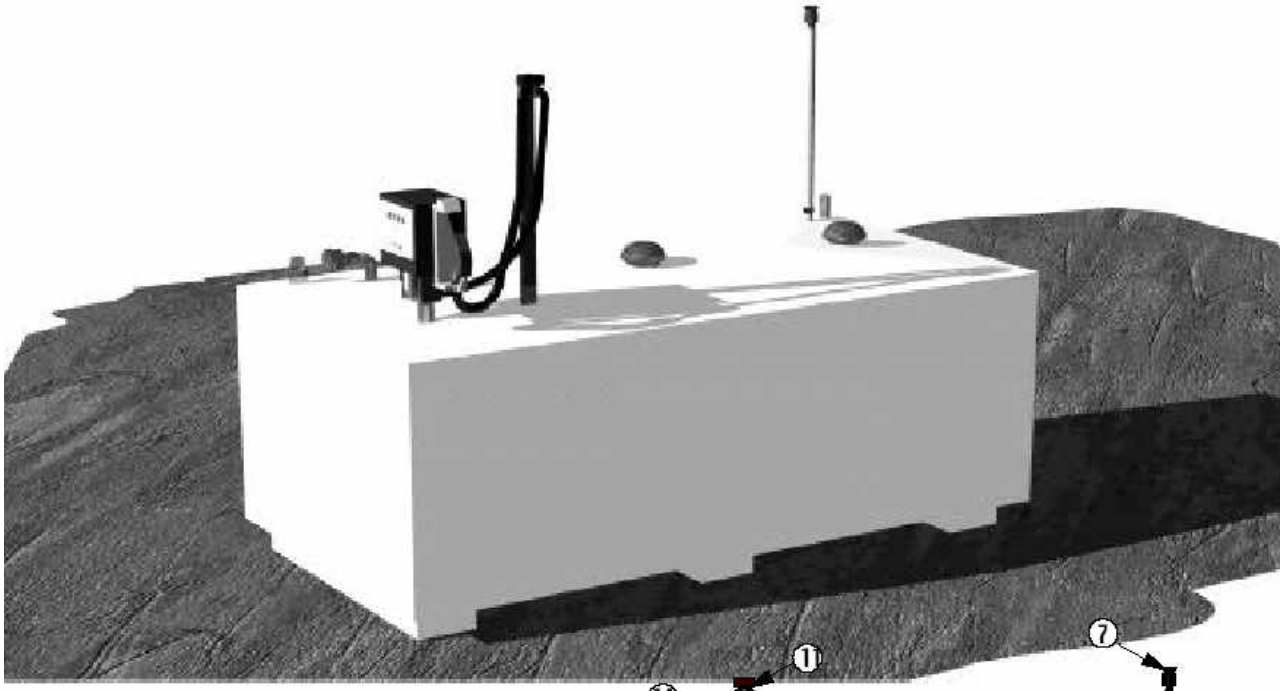

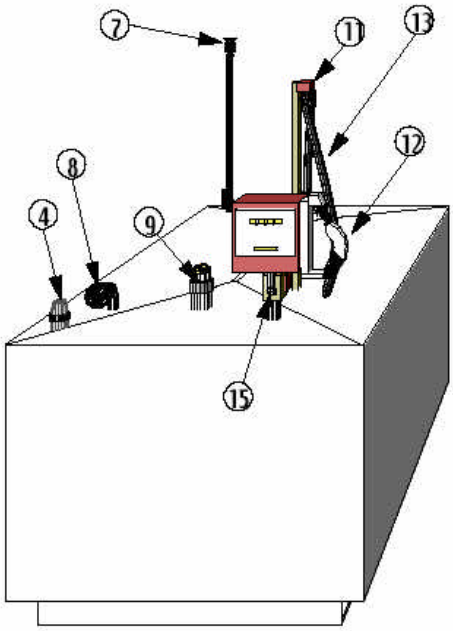

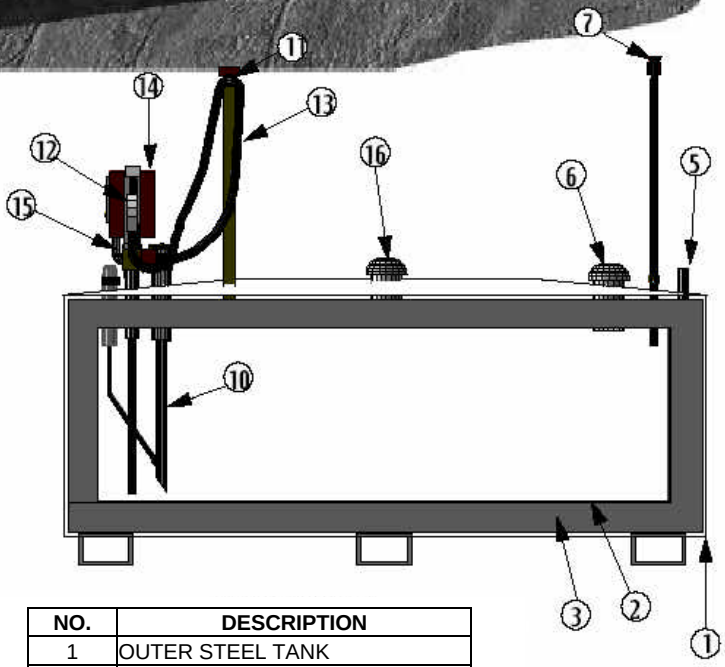

NO.	DESCRIPTION
1	OUTER STEEL TANK
2	INNER STEEL TANK
3	6" CONCRETE
4	LEVEL GAUGE
5	INTERSTITIAL MONITORING TUBE
6	TANK EMERGENCY VENT
7	PRESSURE VACUUM (P/V) VENT
8	VAPOR ADAPTOR AND CAP
9	FILL ADAPTOR AND CAP
10	SUBMERGED FILL TUBE
11	HOSE RETRACTOR
12	NOZZLE
13	COAXIAL HOSE
14	PUMP
15	COAXIAL HOSE ADAPTOR
16	OUTER TANK VENT