Exhibit 4

Tank w/Adjacent Ground-Mount Dispenser and High-Hang Hose Phase II Vapor Recovery System

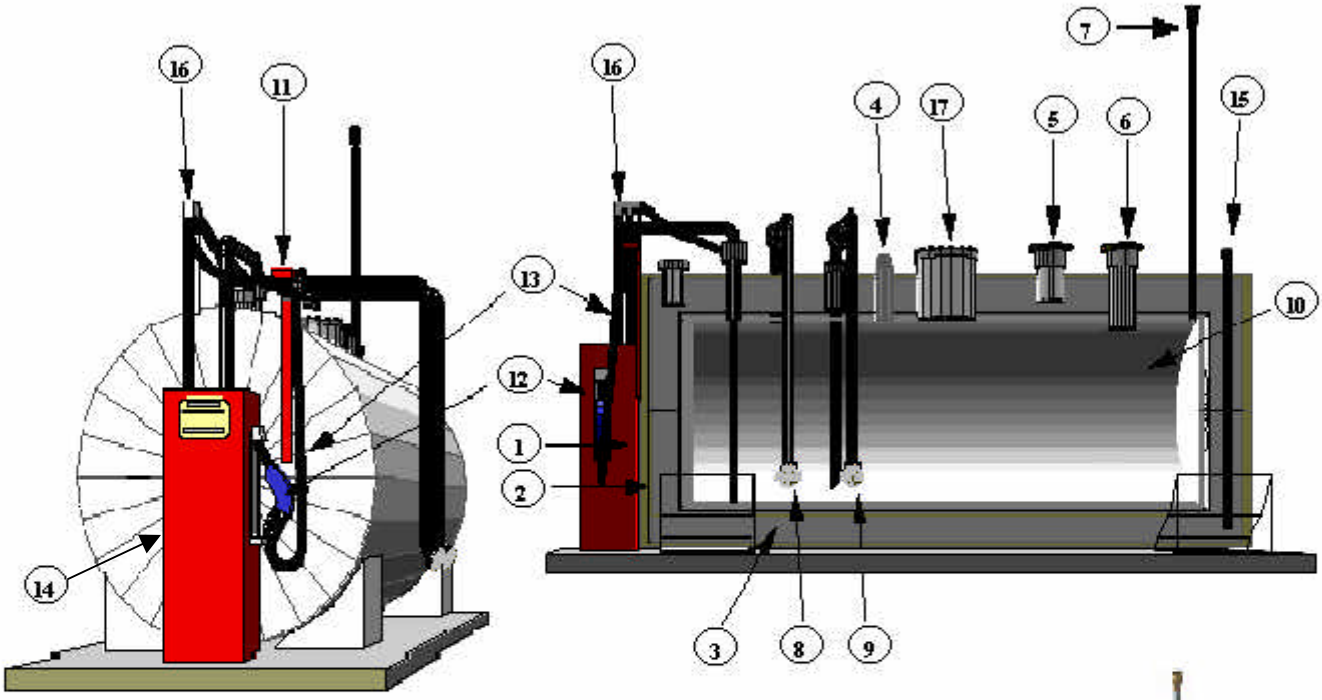

TANK LEGEND

NO.	DESCRIPTION
1	OUTER STEEL TANK
2	INNER STEEL TANK
3	CONCRETE INSULATION
4	GAUGE ACCESS
5	CONCRETE INLET PORT
6	INNER TANK EMERGENCY VENT
7	PRESSURE VACUUM (P/V) VENT
8	VAPOR ADAPTOR AND CAP
9	FILL ADAPTOR AND CAP
10	SUBMERGED FILL TUBE
11	HOSE RETRACTOR
12	NOZZLE
13	COAXIAL HOSE
14	PUMP
15	ANNULAR SPACE MONITORING TUBE
16	COAXIAL HOSE ADAPTOR
17	MANHOLE (STD. ON 5000 GAL. & LARGER