State of California
AIR RESOURCES BOARD

Executive Order G-70-118

Certification of the Amoco V-1
Vapor Recovery System

WHEREAS, the Air Resources Board (the "Board") has established, pursuant to Sections 39600, 39601, and 41954 of the Health and Safety Code, certification procedures for systems designed for the control of gasoline vapor emissions during motor vehicle fueling operations. ("Phase II vapor recovery systems") in its "Certification Procedures for Gasoline Vapor Recovery Systems at Service Stations," adopted March 30, 1976 and amended August 25, 1977 and December 4, 1981 (the "Certification Procedures"), incorporated by reference in Section 94001 of Title 17, California Administrative Code; Code of Regulations.

WHEREAS, the Board has established, pursuant to Sections 39600, 39601, and 41954 of the Health and Safety Code, test procedures for determining compliance of Phase II vapor recovery systems with emission standards in its "Test Procedures for Determining the Efficiency of Gasoline Vapor Recovery Systems at Service Stations," adopted on December 9, 1975 and amended on March 30, 1976, August 9, 1978, December 4, 1981 and September 1, 1982 (the "Test Procedures"), incorporated by reference in Section 94000 of Title 17, California Administrative Code; Code of Regulations.

WHEREAS, the Amoco Oil Company, has applied for certification of its Amoco V-1 Vapor Recovery System;

WHEREAS, the Amoco V-1 Vapor Recovery System has been evaluated pursuant to the Air Resources Board's Certification Procedures and Test Procedures;

WHEREAS, Section VII-A of the Certification Procedures provides that the Executive Officer shall issue an order of certification if he or she determines that a vapor recovery system conforms to all of the requirements set forth in Sections I through VII of the Certification Procedures;

WHEREAS, I find that the Amoco V-1 Vapor Recovery System conforms with all of the requirements set forth in Sections I through VII of the Certification Procedures as amended on December 4, 1981, and would result in a vapor recovery system that is at least 95 percent effective for attendant and/or self-serve use at gasoline service stations when used in conjunction with Phase I vapor recovery systems that have been certified by the Board;

NOW, THEREFORE, IT IS HEREBY ORDERED that the Amoco V-1 Vapor Recovery System is hereby certified to be at least 95 percent effective in the self-serve and/or attendant use at gasoline service stations when used with a Board certified Phase I vapor recovery system. A typical piping arrangement for this system is described in Exhibit 1. A typical gasoline dispenser configuration showing the vapor pump and nozzle is shown in Exhibit 2. Certified components are listed in Exhibit 3.

IT IS FURTHER ORDERED that compliance with the applicable certification requirements and rules and regulations of the Division of Measurement Standards, the State Fire Marshal's Office and the Division of Occupational Safety and Health of the Department of Industrial Relations is made a condition of this certification.

IT IS FURTHER ORDERED that the Amoco V-1 Vapor Recovery System certified hereby shall perform in actual use with the same effectiveness as the certification test system. Compliance with this performance criterion shall be a condition of this certification, and failure to meet this criterion shall constitute grounds for revocation, suspension or modification of this certification.

IT IS FURTHER ORDERED that any alteration of the equipment, parts, design, or operation of the configurations certified hereby, is prohibited, and deemed inconsistent with this certification, unless such alteration has been approved by the undersigned or the Executive Officer's designee.

IT IS FURTHER ORDERED that the certified Phase II vapor recovery system shall, at a minimum, be operated in accordance with the manufacturer's recommended maintenance intervals and shall use the manufacturer's recommended operation, installation, and maintenance procedures, if available.

IT IS FURTHER ORDERED that the certified Phase II vapor recovery system shall be performance tested during installation for ability to dispense gasoline and collect vapors without difficulty in the presence of the station manager or other responsible individual. The station manager, owner, or operator shall be provided with instructions on the proper use, maintenance, and repair of the system, and where system components can be readily obtained. A copy of the system warranty shall also be made available to the station manager, owner, or operator.

Executed at Sacramento, California this 24th day of June 1988.

James D. Boyd
Executive Officer

Executive Order G-70-118
Amoco Oil Company Phase II
Vapor Recovery System

(See Exhibit 2 and latest revision of Executive Order G-70-52 for Component List by Manufacturer, Model, and State Fire Marshal Identification Number.)

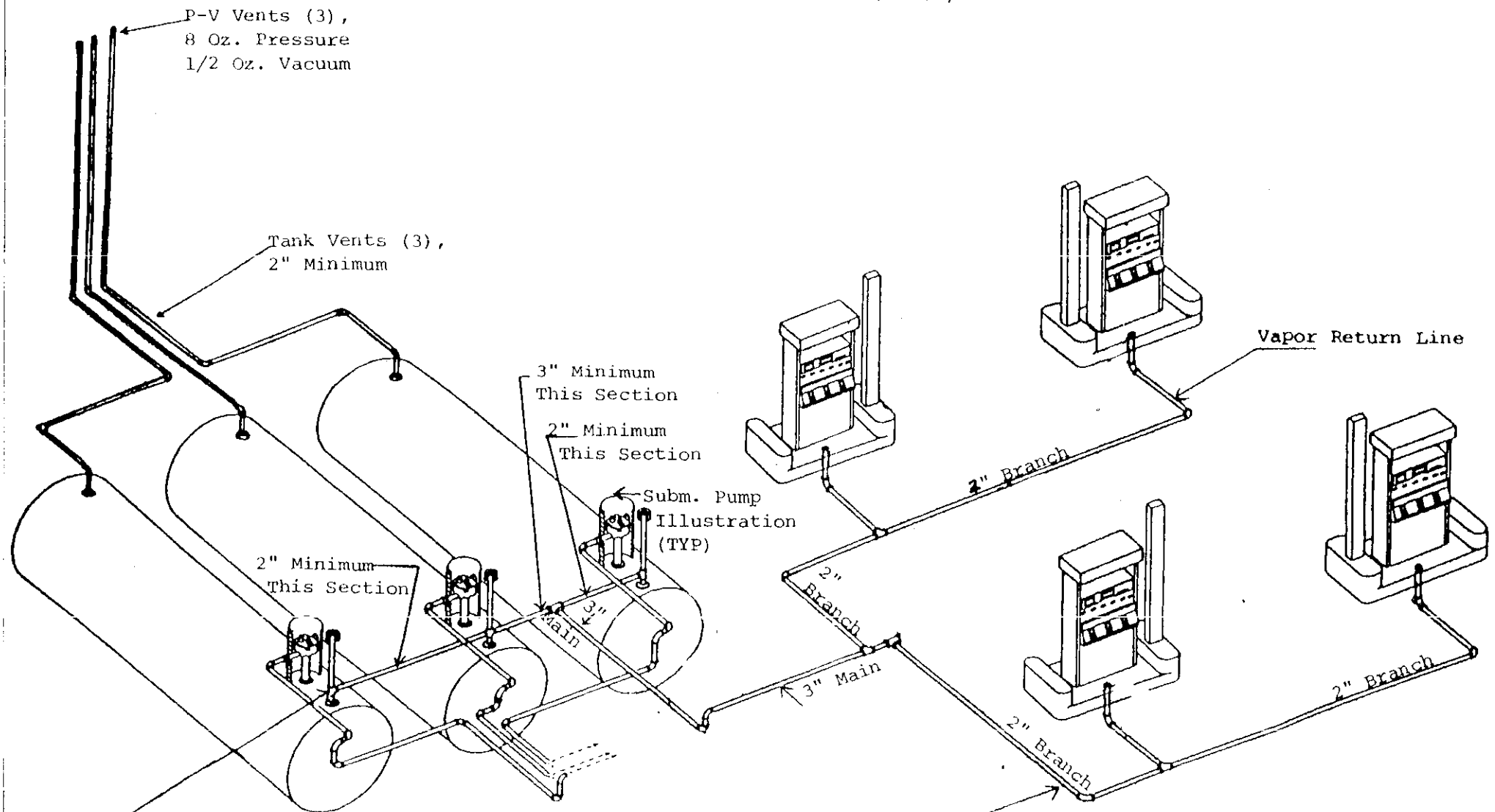

Air Resources Board approved coaxial or two-point Phase II systems are acceptable.

If individual vapor return lines are used, they shall be a minimum of 2".

EXECUTIVE ORDER G-70-118
NOTES TO ACCOMPANY EXHIBIT 1

1. For non-retail outlets which fuel special vehicles, the installation of vapor recovery hoses longer than specified in the latest version of Executive Order G-70-52 are allowed if the following conditions are met:

   a. The non-retail outlet fuels special vehicles such as large trucks, large skip loaders, off-the-road equipment, etc. where reaching the fill pipe requires longer hoses.

   b. The vapor return hoses are arranged to be self-draining or provisions are made to drain the hoses after each refueling or the system incorporates an approved liquid blockage detection system arranged to cease dispensing when a blockage occurs.

   c. The Executive Officer of the Air Resources Board or his/her designee has approved the plans for compliance with condition b.

2. The vent pipes and vent manifold shall be adequately supported throughout their length and when they are supporting weights in addition to their own, additional supports may be required, such as anchoring to a building or other structure.

3. All vapor return and vent piping shall be equipped with swing joints at the base of the riser to each dispensing unit, at each tank connection, and at the base of the vent riser where it fastens to a building or other structure. When a swing joint is used in a riser containing a shear section, the riser must be rigidly supported.

4. On new installations, float check valves (or alternate equipment, design, or operating procedures acceptable to the Air Resources Board) are required for all underground manifolded piping to prevent contamination of unleaded gasoline with leaded gasoline, via vapor recovery piping, during underground storage tank loading or overfill.

Exhibit 2

Executive Order G-70-118
Amoco V-1 Vapor Recovery System
Typical Dispenser Schematic

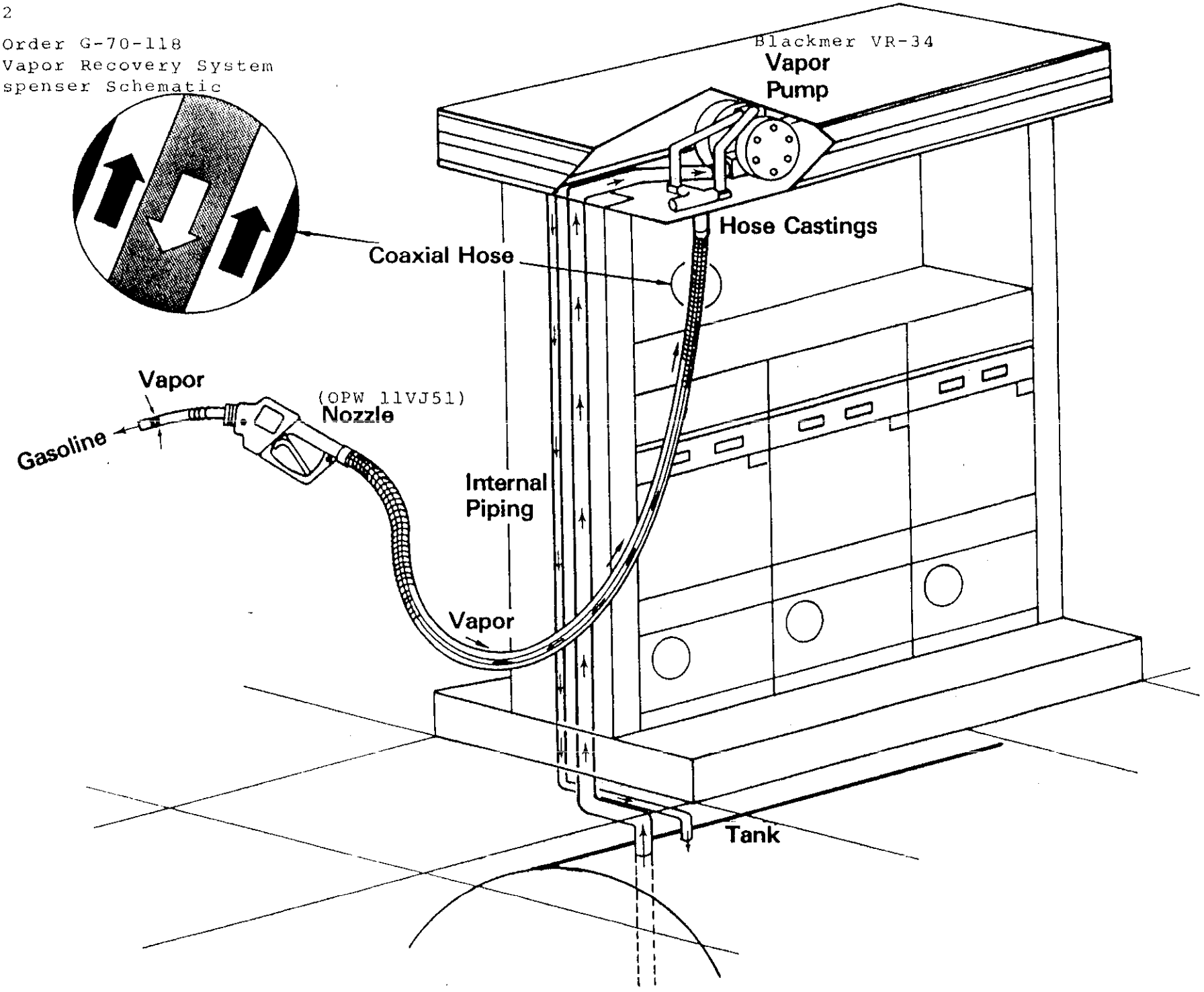

Exhibit 3

Executive Order G-70-118

Amoco V-1 Vapor Recovery System

Component List

Item	Manufacturer/Model	State Fire Marshal Identification No.
Vapor Recovery Coaxial Nozzle	OPW 11-V J-51	005:008:043
Vapor Pump	Blackmer Model VR-34	001:039:001
Coaxial Hose	Dayco Petroflex 2000 Model 7574 with venturi pickup	005:033:004
	Goodyear Maxxim with	005: 36:001
	Gilbarco Venturi Liquid Removal System	005:026: 11
Dispenser	Dresser Wayne 1/ Model 390-IL	
Pressure Vacuum Vents	OPW 523(2") or 523-S(2") set at 8 oz. pressure 1/2 oz. vacuum	

1/ The dispenser must be installed in with the hose configuration shown in Air Resources Board Executive Order G-70-52 AI, Exhibit 10.