Executive Order G-70-118-AB

Exhibit 2

Specifications for the Amoco System

Typical installations of the Amoco system are shown in Figures 2A.

<u>Nozzles</u>

1. An efficiency compliance device (ECD) shall be installed on the Husky V-1 and OPW 11-VAA nozzles at the base of the spout as shown in Figures 2C-1 and 2C-2. Any nozzle with an ECD which is missing is deemed defective and shall be immediately removed from service. For the Husky V-1 nozzle, any ECD which is damaged such that at least one-eighth (1/8) of the diameter is missing, or has cumulative damage equivalent to at least 1/8 of the diameter missing, is defective and shall be immediately removed from service. For the OPW 11-VAA nozzle, any ECD which is damaged such that a slit from the outer to inner edge exists, or has cumulative damage equivalent to this, is defective and shall be immediately removed from service. Any nozzles which was installed without an ECD prior to the issuance of this Order shall be equipped with an ECD within 60 days of the effective date of this Order, or shall then be considered defective.

2. The nozzles have an integral vapor valve which prevents the loss of vapor from the underground storage tanks, ensures proper operation of the system and prevents the ingestion of air into the system. Any nozzle with a defective vapor valve shall be immediately removed from service. The integrity of the system shall be restored by replacing the nozzle or otherwise closing the vapor path as soon as practicable.

3. Nozzles shall be 100 percent performance checked at the factory, including checks of all shutoff mechanisms and of the integrity of the vapor path. The Husky V1 and the OPW 11VAA nozzles contain a liquid removal system. When the appropriate liquid pick-up tube is installed in compliance with Exhibit 3 of this Order, this fulfills the requirement for a liquid removal system. The maximum allowable leak rate for the nozzle, including the vapor valve and, if present, the liquid removal system, shall not exceed the following:

   0.038 CFH at a pressure of two inches water column (2" wc), and
   0.005 CFH at a vacuum of twenty seven inches water column (approx 1 psi).

   No sealing of the vapor holes on the nozzle spout (such as placing a balloon or the fingers of a glove over the holes) is permitted during static pressure decay tests.

4. Failure mode testing demonstrated that blockage of some of the vapor collection holes in the spout has negligible effect on the operation of the system. Any Husky V-1 nozzle which is found to have less than two unobstructed vapor collection holes is defective and shall be immediately removed from service. Any OPW 11-VAA which is found to have less than three unobstructed vapor collection holes is defective and shall be immediately removed from service.

5. Leaded and unleaded spouts are interchangeable.

Breakaway Couplings

1. Breakaway couplings are optional but, if installed, only certified breakaways may be used.

2. The following section does not apply to breakaways that contain a valve which closes the vapor path when it is separated. Operation of the system when a breakaway coupling is separated may allow vapor to escape from, or air to be ingested into, the system. CARB-certified breakaways which do not close the vapor path, but which were installed before April 1, 1995, may remain in use subject to the approval of the local district. Separated breakaways shall be recoupled, or the vapor path plugged, as soon as practicable. The local district may impose a specific time requirement.

Coaxial Hose

1. The hoses shall be installed in conformance with the specifications contained in Exhibit 3 of this Order.

Amoco V-1 System

1. The minimum air to liquid ratio of the system, uncorrected to standard temperature and pressure, measured at a flowrate of at least seven gallons per minute (7 gpm), shall be as high as or higher than the values listed below (linear interpolation may be used to calculate intermediate values). Any fueling point not capable of demonstrating compliance with this performance standard shall be deemed defective and removed from service. The air to liquid ratio shall be determined by a CARB-approved or district-approved test procedure. (Draft procedure TP-201.5 may be used until an air to liquid ratio test procedure is adopted by CARB). Alternative test procedures may be used if they are determined by the Executive Officer to yield comparable results.

Flow Rate (gpm)	Minimum Air To Liquid Ratio
7	1.11
8	1.08
9	1.06
10	1.04

NOTES:

a. The test shall be conducted so as to ensure that the entire volume drawn by the pump is measured. If the test is performed such that the aspirator portion of the nozzle is included, the A/L ratios may be .05 to .10 higher than those listed above.

b. On systems with standard coaxial hoses, low A/L readings may indicate the presence of liquid in the coaxial hoses. The liquid should be removed by dispensing several gallons before continuing A/L testing.

c. This test procedure returns air rather than vapor to the storage tank, and normally causes an increase in storage tank pressure which may result in vent emissions. This is a temporary condition due to the test and should not be considered an indication of malfunction or noncompliance.

2. One Blackmer model VR-3/4 pump shall be installed for each dispensing nozzle.

3. Whenever possible, the pump shall be installed inside the dispenser cabinet. The pump shall be installed in accordance with the instructions of the manufacturer. Any modification of the dispenser piping must be made in accordance with the instructions of the dispenser manufacturer.

4. The pump shall be serviced only by a qualified contractor. Field service of the pump is prohibited.

5. The pump makes an audible clicking sound when operating normally. The clicking sound may be masked by background noise.

Vapor Lines and Tank Vents

1. A pressure/vacuum (P/V) valve shall be installed on each tank vent. Vent lines may be manifolded provided the manifold is installed at a height not less than 12 feet above the driveway surface used for Phase I tank truck filling operations. At least one P/V valve shall be installed on manifolded vents. If two P/V valves are desired, they shall be installed in parallel, so that each can serve as a backup for the other if one should fail to open properly. The P/V valve shall be CARB-certified as specified in Exhibit 1. The outlets shall vent upward and be located to eliminate the possibility of vapor accumulating or traveling to a source of ignition or entering adjacent buildings.

2. The maximum allowable pressure drop through the system, measured at a flow rate of 60 SCFH with dry Nitrogen gas, shall not exceed 0.02 inches water column (0.03 inches wc if the measurement includes an inpact valve). The pressure drop from the dispenser riser to the UST shall be measured with the poppeted Phase I vapor connection open and with P/V valves installed or with the vents capped.

3. All vapor return lines shall slope a minimum of 1/8 inch per foot. A slope of 1/4 inch or more per foot is recommended wherever feasible.

4. The dispenser shall be connected to the riser with either flexible or rigid material which is listed for use with gasoline. The dispenser-to-riser connection shall be installed so that any liquid in the lines will drain toward the storage tank. The internal diameter of the connector, including all fittings, shall not be less than five-eighths inch (5/8").

5. The recommended nominal inside diameter of the underground Phase II plumbing is as indicated in 2A. Smaller vapor lines are not recommended but may be used provided the pressure drop criteria specified above are met. The vapor return lines shall be manifolded below grade at the tanks as indicated in the figures.

6. All vapor return and vent piping shall be installed in accordance with the manufacturer's instructions and all applicable regulations.

Storage Tank and Phase I System

WARNING: Phase I fill caps should be opened with caution because the storage tank may be under pressure.

1. The local district may require the installation of a threaded tap at least 1/8" in diameter at which the underground storage tank (UST) pressure may be monitored. The tap may be in the dispenser riser connection or on the vent line, and shall be accessible for connection to a pressure gauge. One tap is adequate for manifolded systems. The tap shall remain plugged and vapor tight except when test equipment is being connected to or removed from it. The system shall not be allowed to operate when the taps are not vapor tight. If located on the vent line, the tap shall be at least six feet (6') and not more than eight feet (8') above grade. A high-quality quick-connect fitting with a vapor-tight cap may be installed instead of a plug if specified by the district.
   NOTE: Frequent venting (except when caused by air ingested into the system during the performance of the A/L ratio test, Phase I activities or other events not specifically caused by the Phase II system) may indicate system malfunction. Observation of rapid pressure decay when no vehicles are fueling may indicate leaks in the system; a static pressure decay test may be used to determine compliance with the vapor integrity requirements.

2. The Phase I system shall be a CARB-certified system which is in good working order and which demonstrates compliance with the static pressure decay test criteria contained in Exhibit 4 of this Order.

   After January 1, 1994, coaxial Phase I systems shall not be used with new installations of the V-1 system. Replacement of storage tanks at existing facilities, or modifications which cause the installation of new or replacement Phase I vapor recovery equipment, are considered new installations with regard to this prohibition. An exception to this prohibition may be made for coaxial Phase I systems CARB-certified after January 1, 1994, as compatible for use with Phase II systems which require pressure/vacuum vent valves.

   After January 1, 1994, where installation of the Amoco system is made by retrofitting previously installed equipment, local districts may elect to allow existing coaxial Phase I systems to remain in use for a specifically identified period of time provided the following conditions are met:

   - the existing coaxial Phase I system is a poppeted, CARB-certified system capable of demonstrating compliance with the static pressure decay test criteria in Exhibit 4 of this Order, including removal of all fill caps; and

   - installation of the Phase II system requires no modification of the UST(s) and/or connections.

3. Spill containment manholes which have drain valves shall demonstrate compliance with the static pressure decay criteria with the drain valves installed as in normal operation. Manholes with cover-actuated drain valves shall not be used in new installations (as defined above) after January 1, 1995. Manholes with cover-actuated drain valves may remain in use in facilities where installation of the V-1 system does not require modification

of the tank fittings provided the facility demonstrates compliance with static pressure decay test criteria both with the cover open and with the cover closed.

5. The Phase I vapor recovery system shall be operated during product deliveries so as to minimize the loss of vapors from the facility storage tank which may be under pressure. There shall be no less than one vapor return hose connected for each product being delivered. Provided it is not in conflict with established safety procedures, this may be accomplished in the following manner:

   - The Phase I vapor return hose is connected to the delivery tank and to the delivery elbow before the elbow is connected to the facility storage tank;
   - the delivery tank is opened only after all vapor connections have been made, and is closed before connection of any vapor return hoses;
   - the existing coaxial Phase I equipment is in good working order and has demonstrated compliance with static pressure decay test criteria when tested with all fill caps removed; and
   - the vapor return hose is disconnected from the facility storage tank before it is disconnected from the delivery tank.

Non-Retail Fueling of Special Vehicles

1. For non-retail outlets which fuel special vehicles, the installation of vapor recovery hoses longer than those specified in this Order are allowed if the following conditions are met:

   a. The non-retail outlet fuels special vehicles such as large trucks, large skip loaders, off-the-road equipment, etc., where reaching the fill pipe requires longer hoses.

   b. At least one of the following conditions exists:

      - A liquid system is installed capable of removing any accumulation of liquid which may occur with the proposed hose configuration;
      - The hoses are arranged to be self-draining;
      - Provisions are made to drain the hoses after each refueling;
      - The system incorporates an approved liquid blockage detection system arranged to cease dispensing when a blockage occurs.

   c. The Executive Officer has approved the plans for compliance with Condition b.

Figure 2A

Typical Vapor Return Piping Configuration for Amoco V-1 Vapor Recovery System

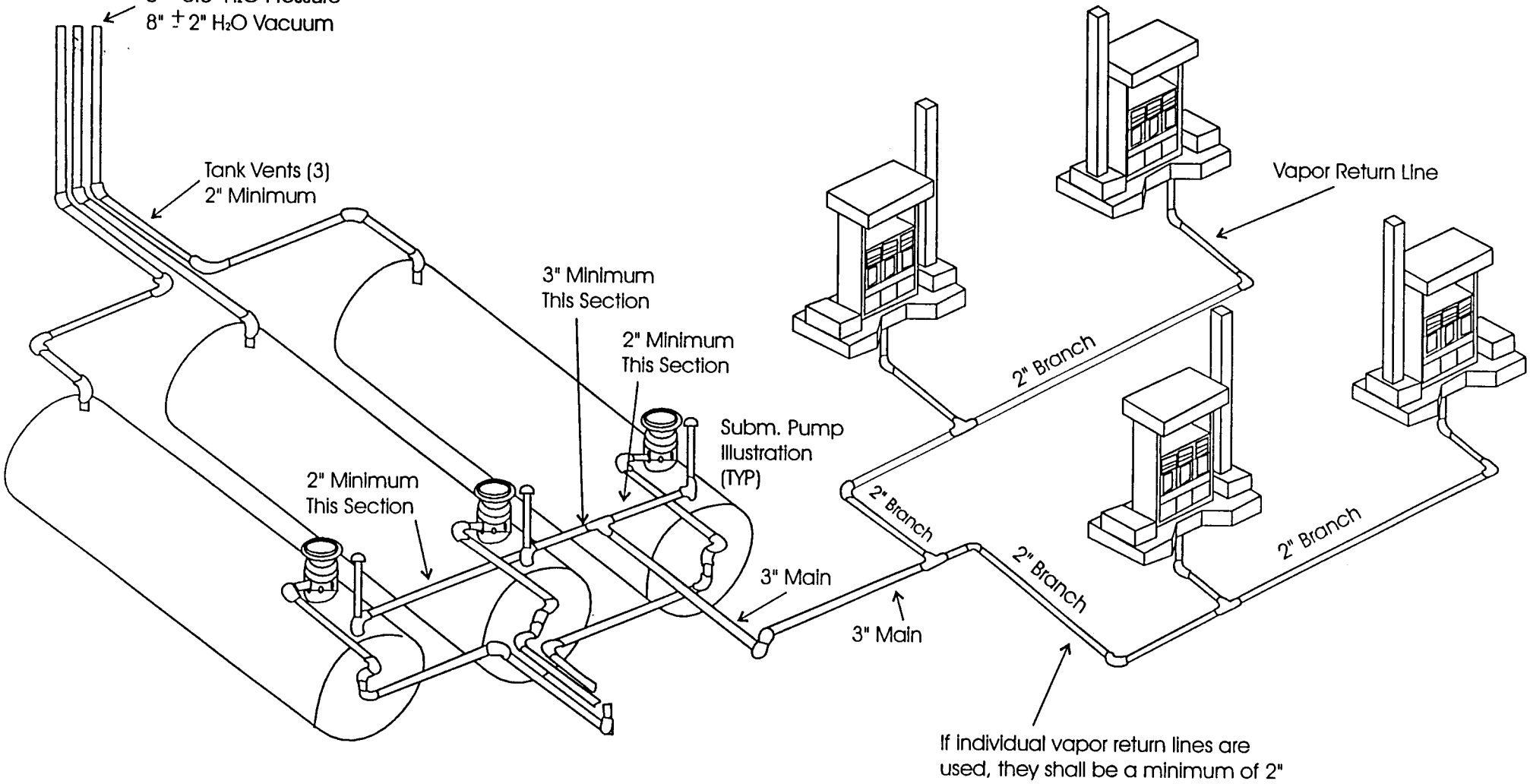

Note: Tanks may be manifolded at the vents in addition to or instead of under ground. Dedicated piping is acceptable providing the vent pipes are manifolded. At least one P/V valve shall be installed on manifolded vents. If two P/V valves are desired, they shall be installed in parallel. If the vents are manifolded, the manifold shall be at least 12 feet above the driveway surface used for Phase I

Figure 2B

Typical Vapor Pump Installations for Amoco V-1 Vapor Recovery Syste

Typical Vapor Pump Hook-Up

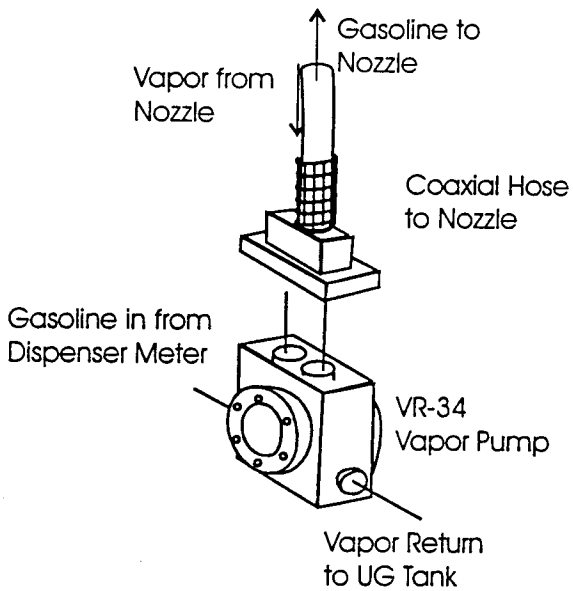

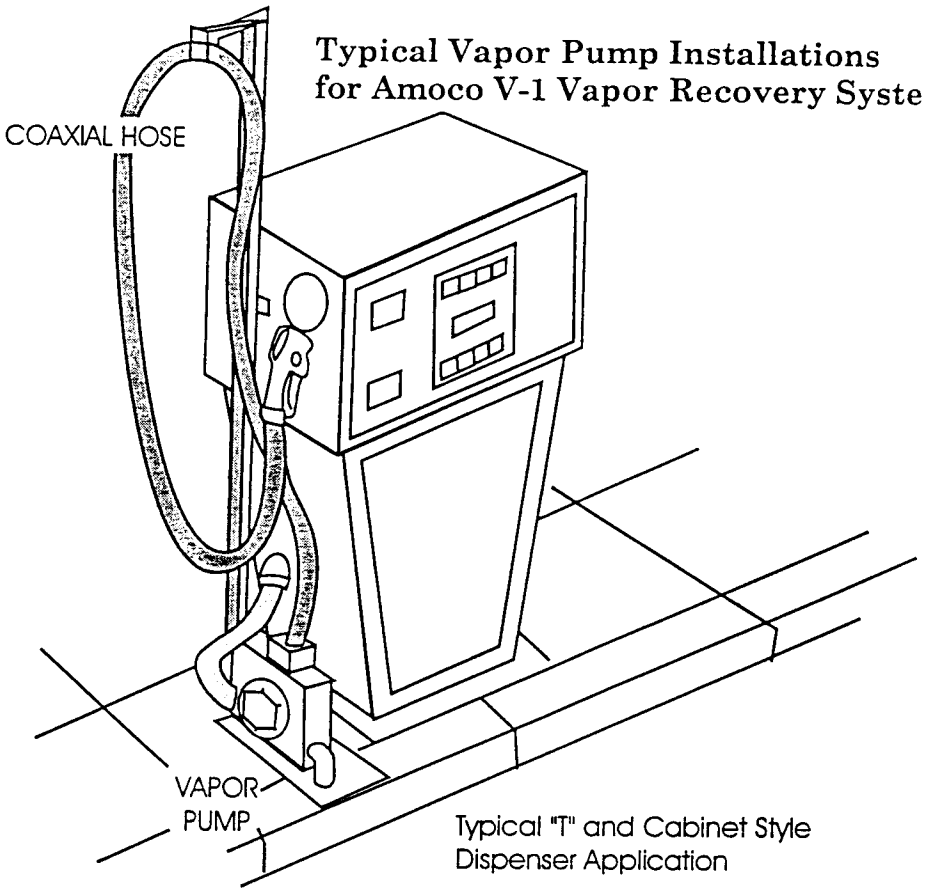

Typical "T" and Cabinet Style Dispenser Application

Note: Pump location varies with dispenser type. Vapor pumps shall be installed in accordance with the dispenser manufacturer's instructions.

Executive Order G-70-118-AB

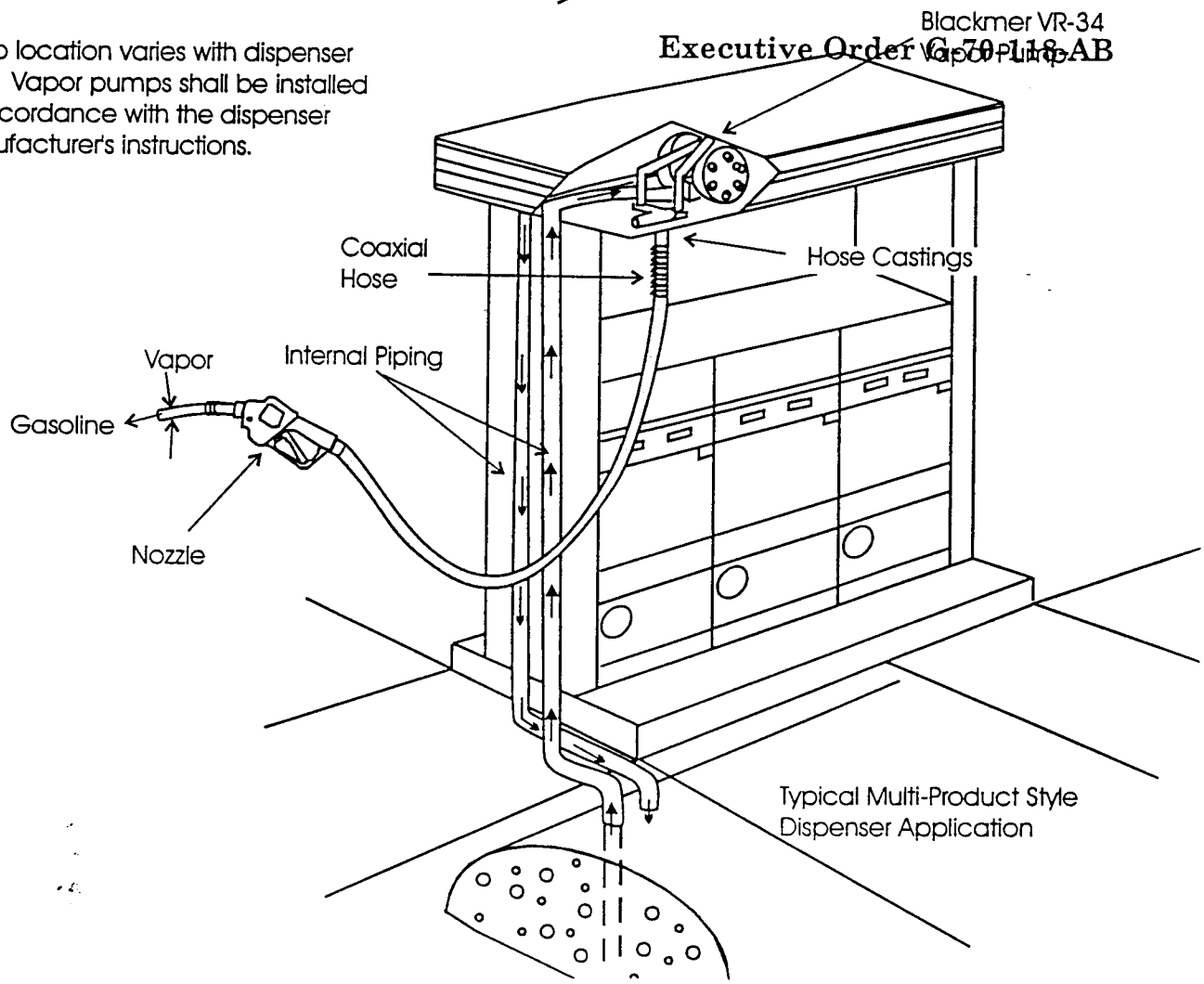

Typical Multi-Product Style Dispenser Application

Executive Order G-70-118-AB

Figure 2C-1

OPW MODEL 11VAA OR CATLOW VAPOR MATE
FOR AMOCO V-1 SYSTEM

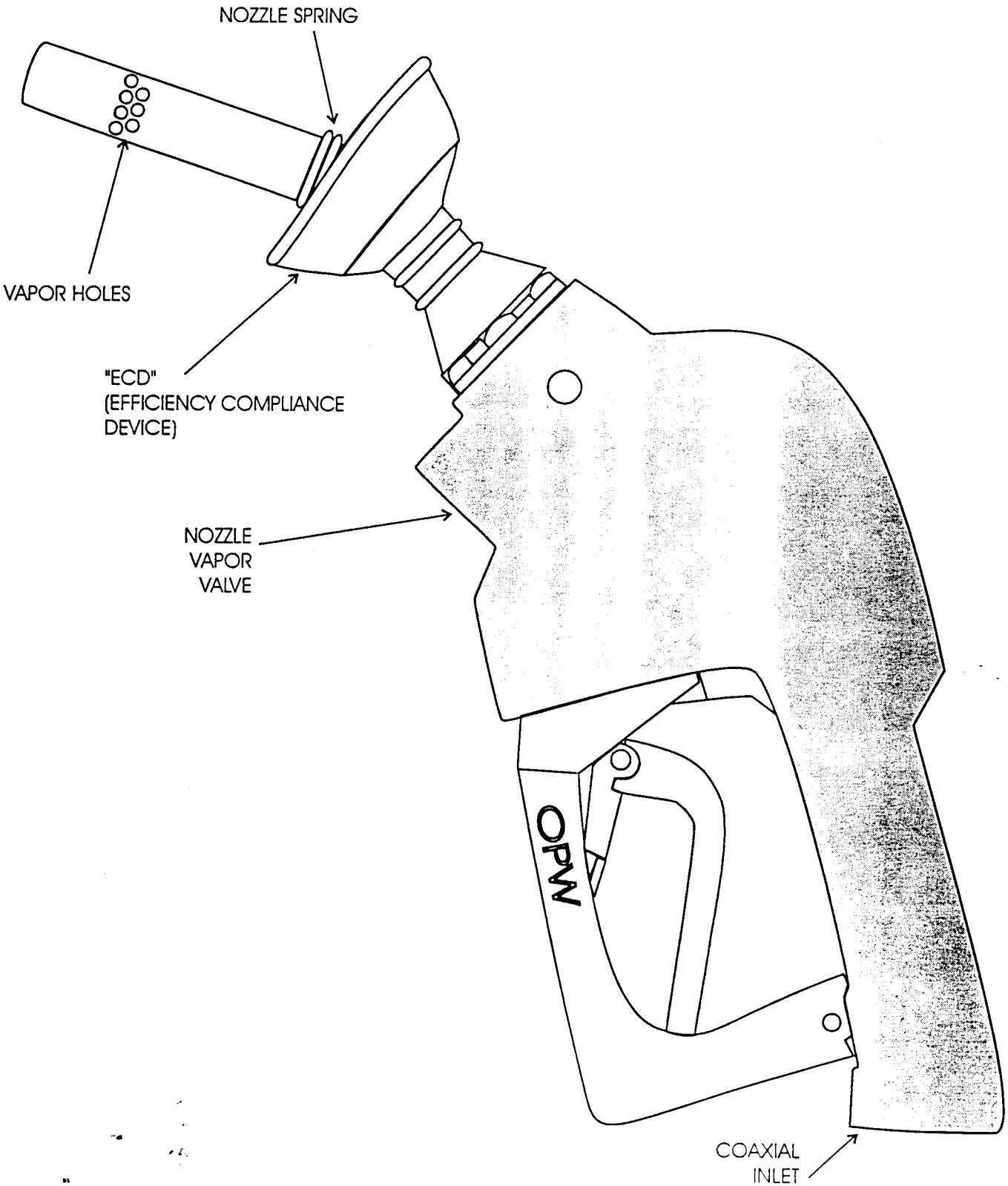

Executive Order G-70-118-AB

Figure 2C-2

HUSKY MODEL V-1
FOR AMOCO V-1 SYSTEM

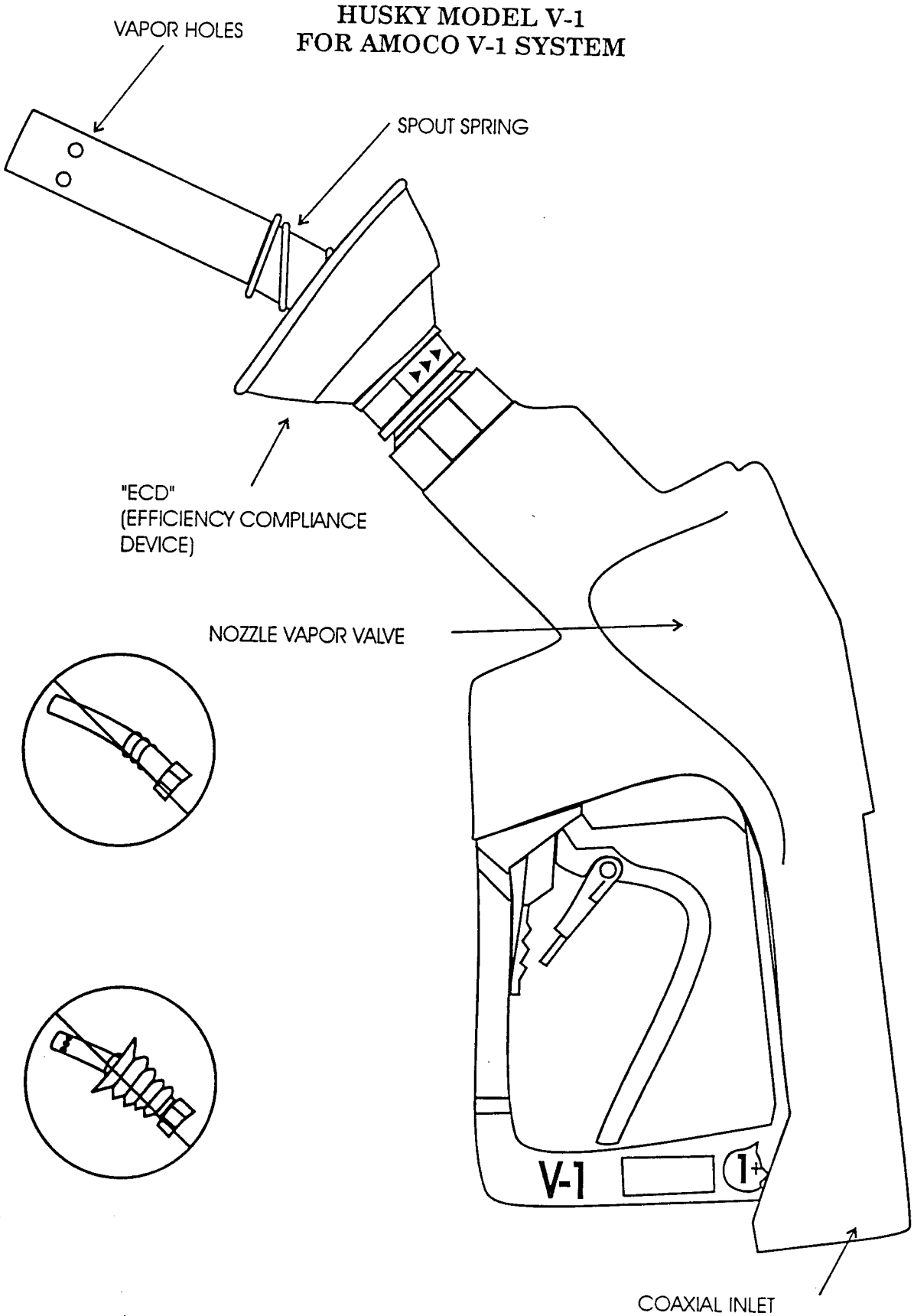

Executive Order G- -118-AB

Figure 2D
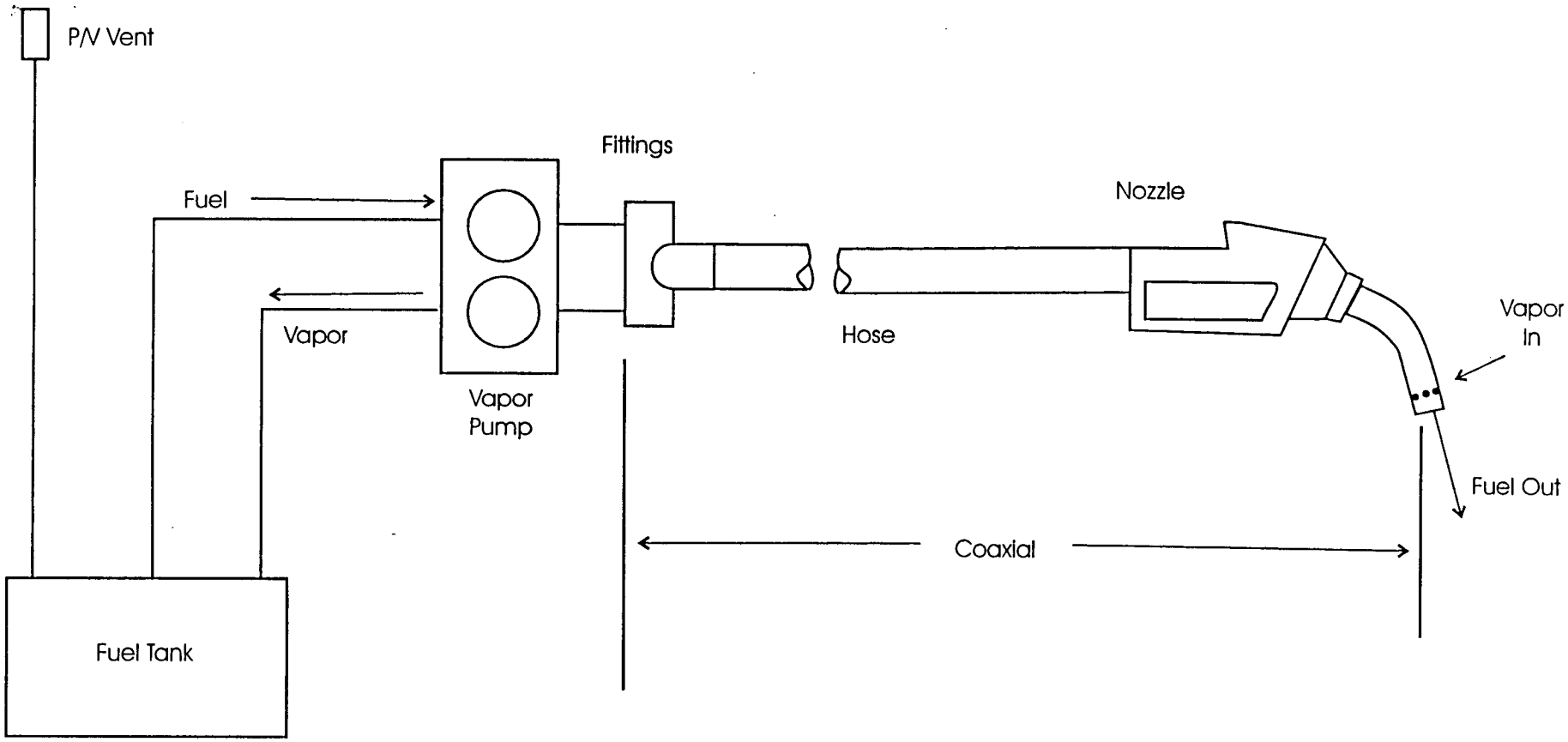
Generic Schematic of Amoco V-1 Vapor Phase IIRecovery System