Executive Order G-70-150-AD

Exhibit 1

Figure 1C
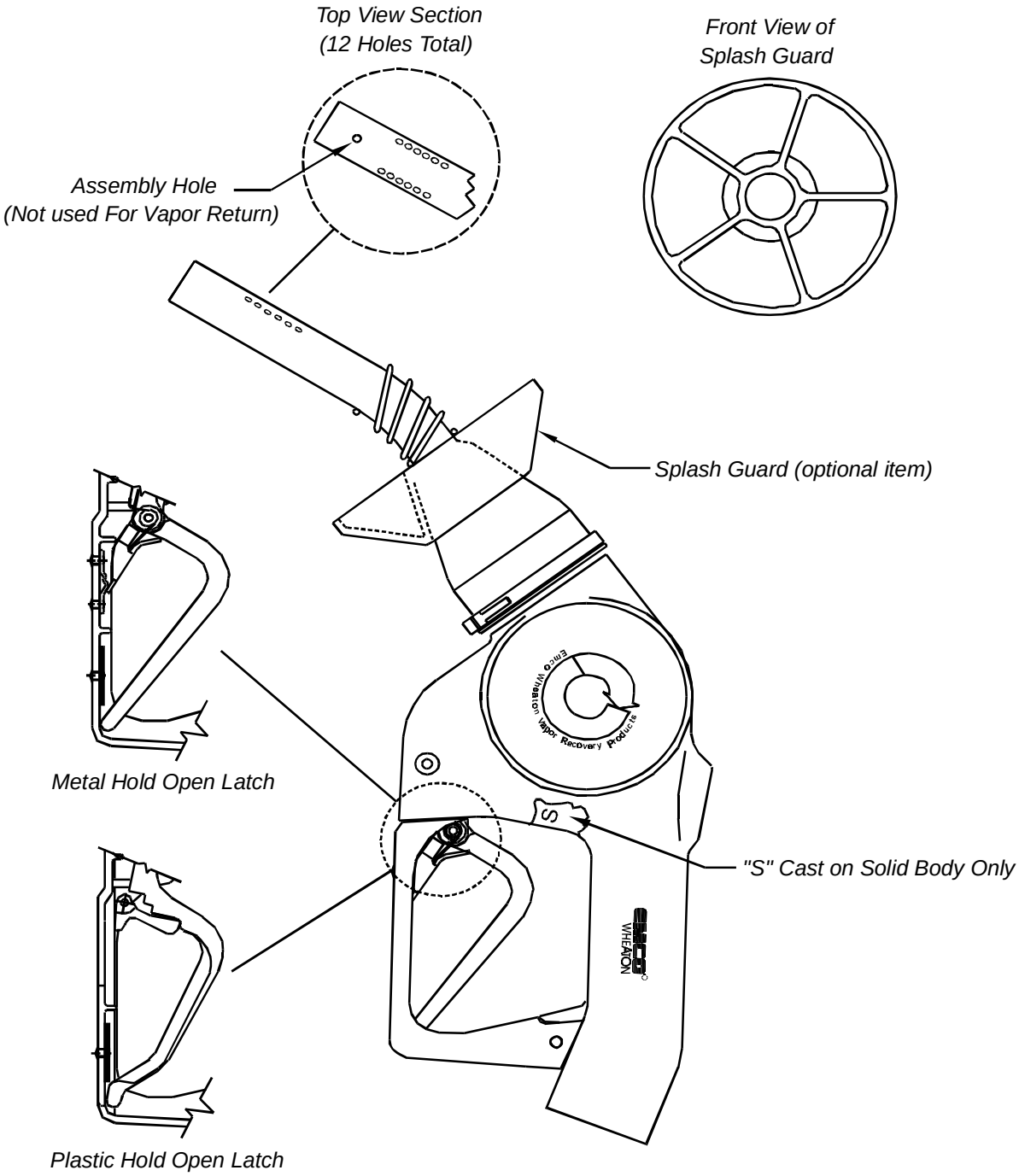
Emco Wheaton Model A4500 Nozzle