Executive Order G-70-150-AD

Exhibit 2

Figure 2B-1
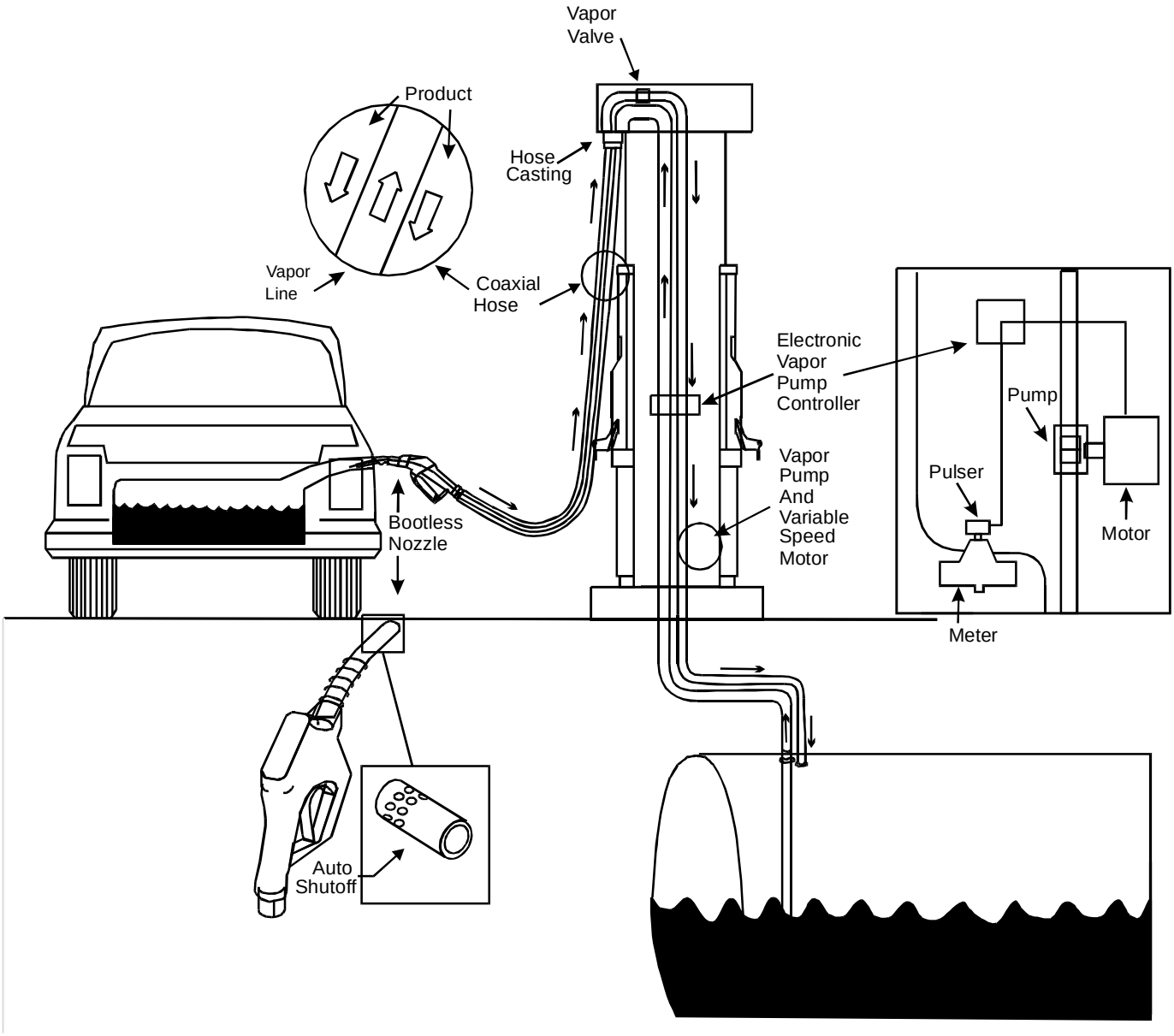
Component Parts of the VaporVac System