Executive Order G-70-150-AE

Exhibit 1

Figure 1A-1
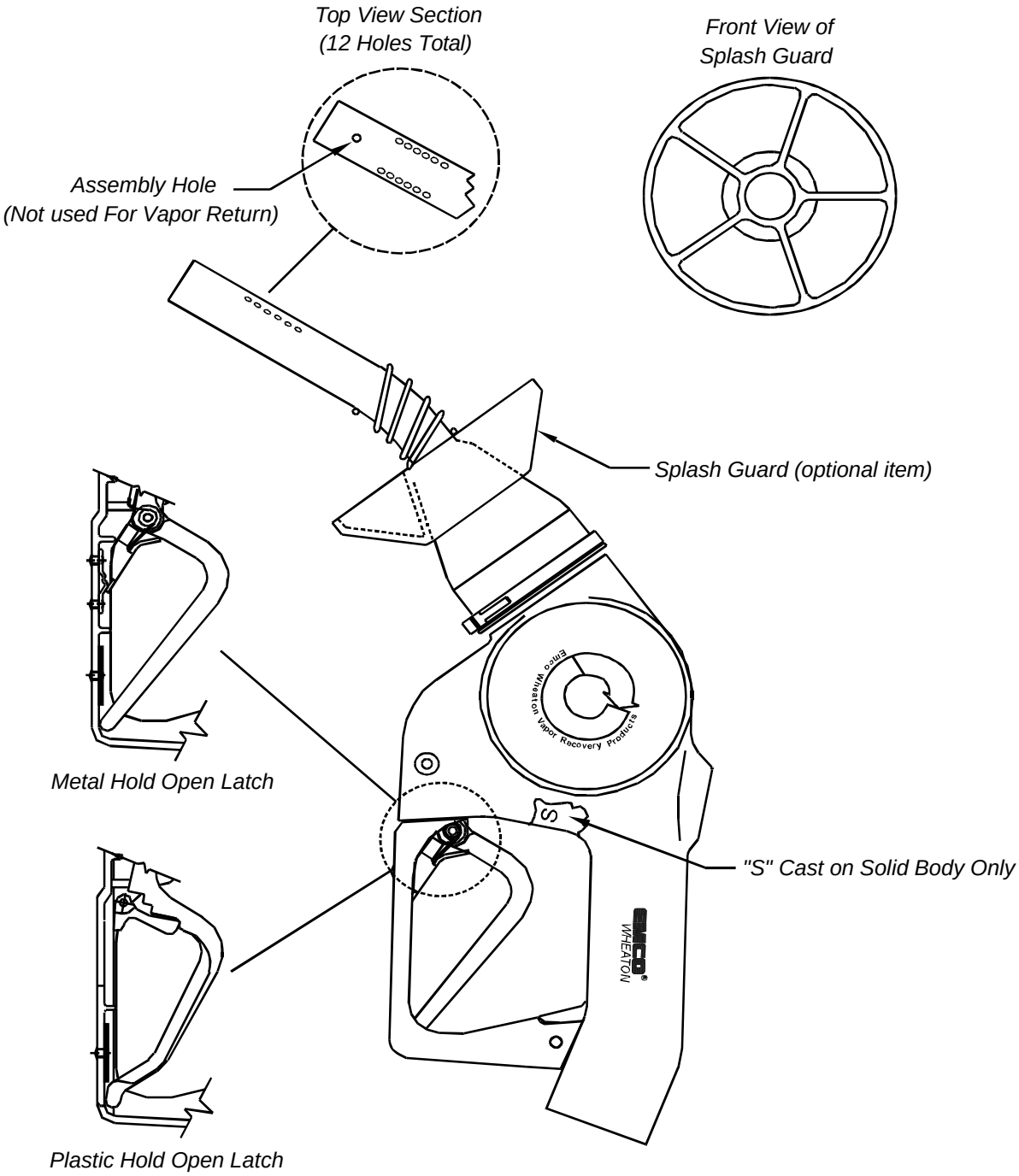
Emco Wheaton Model A4500 Nozzle