Executive Order G-70-150-AE

Exhibit 2

Figure 2B-1
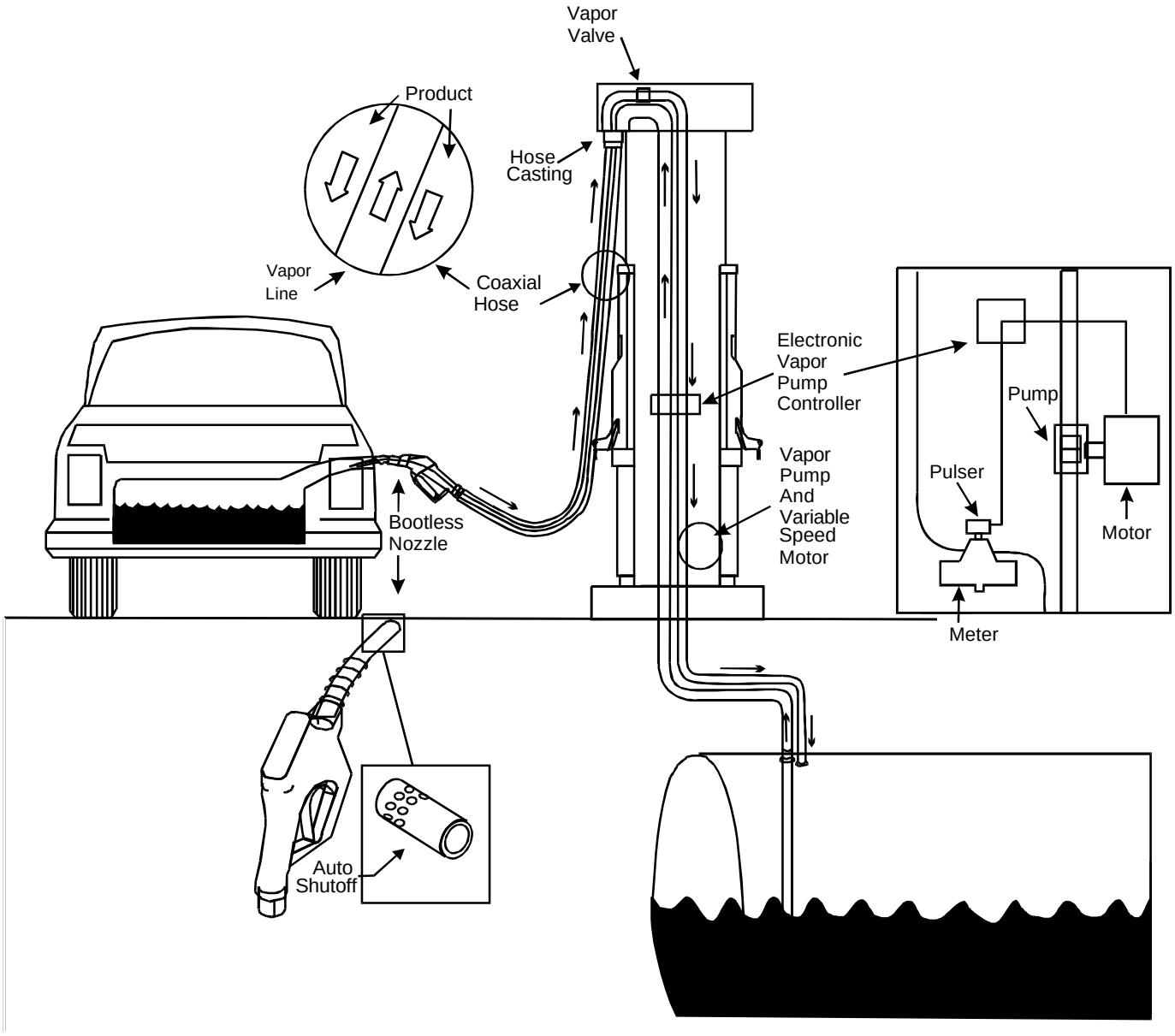
Component Parts of the MCS VaporVac System