AIR RESOURCES BOARD

Executive Order G-70-17-C

Relating to the Modification of the Certification of the
Emco Wheaton Balance
Phase II Vapor Recovery System

Pursuant to the authority vested in the Air Resources Board (ARB) by Health and Safety Code Section 41954; and

Pursuant to the authority vested in the undersigned by Health and Safety Code Sections 39515 and 39516;

IT IS ORDERED AND RESOLVED: That the certification Executive Order G-70-17-B issued on December 6, 1978 for the Emco Wheaton Balance Phase II vapor collection and disposal system is hereby modified

1. to include, as an alternate dispenser configuration, the Dresser Wayne Decade Marketer dispenser;

2. to allow installation of vapor recovery hoses longer than eight feet at non-retail outlets which fuel special vehicles provided that

   a. The non-retail outlet fuels special vehicles such as large trucks, large skip loaders, off-the-road equipment, etc. where reaching the fill pipe requires longer hoses, and

   b. The vapor return hose length is no longer than required, and

   c. The vapor return hoses are arranged to be self-draining or provisions are made to drain the hoses after each refueling or the system incorporates an ARB approved liquid blockage detection system arranged to cease dispensing when a blockage occurs, and

   d. the owner or operator of the non-retail outlet demonstrates to the satisfaction of the Executive Officer of the Air Resources Board compliance with conditions b and c above;

3. to allow the option of not using anti-recirculation devices on noncommercial dispensers not subject to Weights and Measures dispenser accuracy requirements; and

4. to allow greater flexibility in the selection of product hose length for each dispenser, provided that the product hose length selected provides for full extension of the vapor hose.

The system hereby modified is certified to be at least 90% effective in self-serve use and at least 95% effective in attendant use at service stations in conjunction with Phase I vapor recovery systems which have been certified by the Air Resources Board. The system is described in Exhibits 1, 2, 3 and 4 attached hereto.

IT IS FURTHER ORDERED AND RESOLVED: That compliance with the applicable certification requirements and rules and regulations of the Division of Measurement Standards, the State Fire Marshal's Office, and the Division of Industrial Safety of the Department of Industrial Relations is made a condition of this certification.

IT IS FURTHER ORDERED AND RESOLVED: That the system certified hereby shall perform in actual use with the same effectiveness as the certification test system. Compliance with the applicable performance criterion shall be a condition of this certification, and failure to meet this criterion shall constitute grounds for revocation, suspension, or modification of this certification.

IT IS FURTHER ORDERED AND RESOLVED: That any alteration to the equipment, parts, design, or operation of the system certified hereby, is prohibited, and deemed inconsistent with this certification, unless such alteration has been approved by the undersigned.

IT IS FURTHER ORDERED AND RESOLVED: That except for those non-retail outlets refueling special vehicles, in order for vapor return hoses longer than specified in this certification to be used, the system shall incorporate a liquid blockage detector which is acceptable to the undersigned.

Executed at Sacramento, California, the 22nd day of May, 1979.

Thomas C. Austin
Executive Officer

Executive Order G-70-17-*C*

Notes to Accompany Exhibits 1, 2, ~~and~~ 3, *and 4*

1. Vent pipes shall be adequately supported throughout their length and when they are supporting weights in addition to their own, additional supports may be required - anchor to building or other structure.

2. Tank vent pipes two inches or less in nom. inside diameter shall not be obstructed by any device unless the tank and its associated piping & other equipment is protected to limit back pressure development to less than the maximum working pressure of the tank, piping and other equipment by the installation of an approved pressure/vacuum vent, rupture disc or other venting devices installed in the tank vent pipes.

3. Tank vent pipes shall terminate into the open atmosphere and shall be not less than 12 feet above the adjacent ground level. The outlet shall vent upward or horizontally and located to eliminate the possibility of vapors accumulating or traveling to a source of ignition or entering adjacent buildings.

4. All vapor return and vent piping shall be provided with swing joints at the base of the riser to each dispensing unit, at each tank connection, and at the base of the vent riser where it fastens to a building or other structure. When a swing joint is used in a riser containing a shear section the riser must be rigidly supported.

5. Each vapor hose shall be located such that the center line of the hose fitting, at the recirculation trap (if externally mounted) or at the dispenser cabinet swivel mounting (if trap is internally mounted), is not more than 3-1/2 inches above the top surface of the island and is as close as possible to the top surface of the island. *(This note does not apply to alternate dispenser configuration, Exhibit 4.)*

6. For dispenser islands greater than 5 feet in width, each vapor hose length shall not be longer than the sum of one-half of the dispenser island width, in feet, plus 6 feet. *(This note does not apply to alternate dispenser configuration, Exhibit 4.)*

7. *For only those non-retail outlets which fuel special vehicles, the installation of vapor recovery hoses longer than eight feet are allowed provided the following conditions are met:*

   a. *The non-retail outlet fuels special vehicles such as large trucks, large skip loaders, off-the-road equipment, etc. where reaching the fill pipe requires longer hoses.*

   b. *The vapor return hose length is no longer than required.*

   c. *The vapor return hoses are arranged to be self-draining or provisions are made to drain the hoses after each refueling or the system incorporates an approved liquid blockage detection system arranged to cease dispensing when a blockage occurs.*

   d. *The Executive Officer of the Air Resources Board has approved the plans for compliance with conditions b and c.*

8. State Fire Marshal approved swivels (and offsets if necessary) for this system shall be selected and installed on hoses to prevent hose kinking.

9. Product hose~~s one feet or more longer than the vapor hose shall be installed at~~ *length shall be selected for* each dispenser to provide for full extension of the vapor return hose. *(This note does not apply to alternate dispenser configuration, Exhibit 4).*

10. If any OPW 78 series recirculation trap is internally mounted in any dispenser, the top of the recirculation trap shall not be higher than the top surface of the dispenser island and a vapor recovery piping shear section which meets State Fire Marshal requirements shall be installed. *(This note does not apply to alternate dispenser configuration, Exhibit 4)*

11. On dual dispensers dispensing the same product from both sides, the vapor return lines may be connected to a single OPW 78 series recirculation trap mounted internally in the dispenser. *(This note does not apply to alternate dispenser configuration, Exhibit 4).*

12. *For those dispensers classified as non-commercial by the Division of Measurement Standards and are not required to be tested and sealed by Weights and Measures officials, the use of recirculation traps is optional. However, the use of recirculation traps is recommended by the Division of Measurements Standards in any installation where the user utilizes the gallonage figures.*

Exhibit 1

Executive Order G-70-17-C

Emco Wheaton Balance Phase II
Vapor Recovery System

See Attached Notes *and*
Exhibit 4 for Dispenser Components

3/4" Diameter or larger Riser Pipe

See Attached Notes
On Vent Pipes

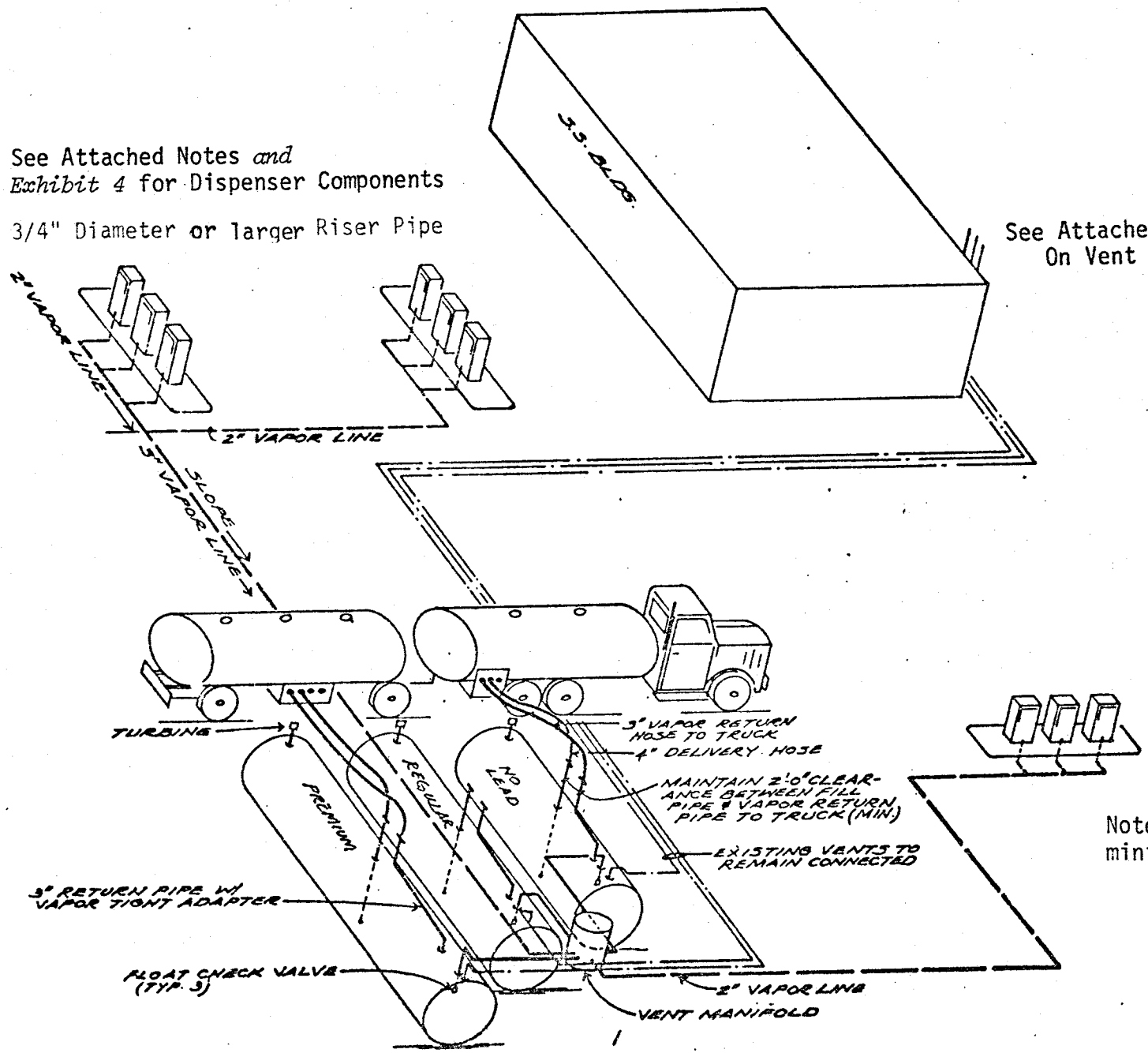

Note: pipe sizes are minimum requirements

Exhibit 2

Executive Order G-70-17-C
Emco Wheaton Balance Phase II
Vapor Recovery System

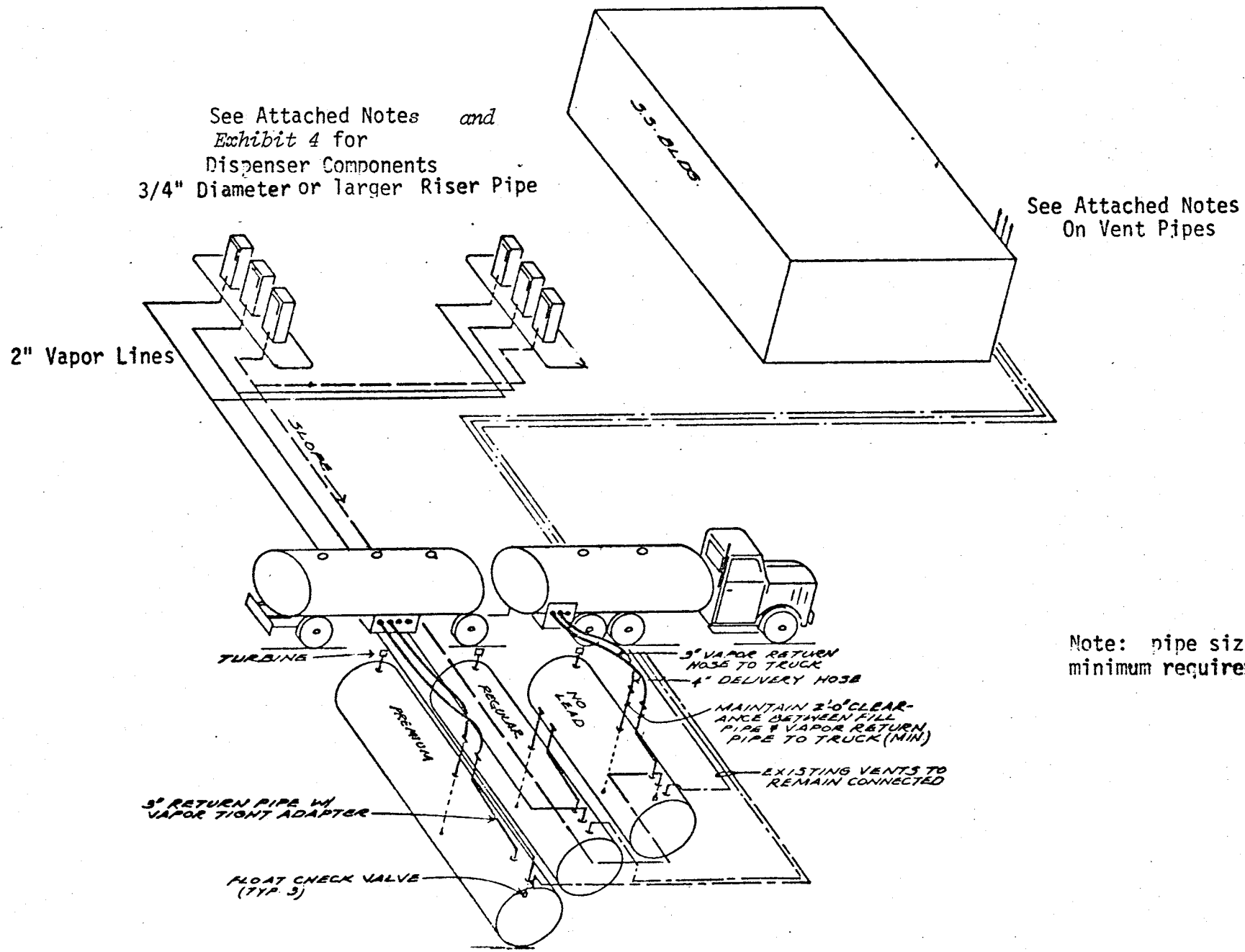

Note: pipe sizes are minimum requirements.

EXHIBIT 3

Executive Order G-70-17-C

Emco Wheaton Phase II Balance

Vapor Recovery System

Component List

Item	Manufacturer and Model	State Fire Marshal Identification Number	Substitute Equipment	
			Manufacturer and Model	State Fire Marshal Identification Number
1. Nozzle	Emco Wheaton A3003 (Extended Spout, Large Diaphram) Vapor Recovery Nozzle (unleaded)	GVRC 001:007:5		
	Emco Wheaton A3003 (Short Spout, Large Diaphram) Vapor Recovery Nozzle (leaded)			
2. Vapor Hose	5/8*in. ID by 8* feet		3/4 in. ID by 8* ft.	
3. Riser	3/4 in. or larger diameter Galvanized Pipe			
4. Swivels				
a. Nozzle	State Fire Marshal Approved. 0.495 in. ID minimum			
b. Island*	State Fire Marshal Approved. 0.495 in. ID minimum			
5. Flow Limiter	Emco Wheaton A-10	GVRC 001:007:1		
6. Recirculation Trap*	Emco Wheaton A008-001*	GVRC 001:007:4*	OPW 78*, 78-S*, 78-E*, or 78-ES*	GVRC 001:008:13*

Not applicable to alternate dispenser configuration, Exhibit 4.

Pressure Drop Through the System
(Includes Nozzle, Vapor Hoses and Underground Piping)

Flow (CFH)	Δ("H_2O)
20	0.10
60	0.40
100	0.96

EXHIBIT 4

Executive Order G-70-17-C
Emco Wheaton Phase II Balance
Vapor Recovery System
Alternate Dispenser Configuration

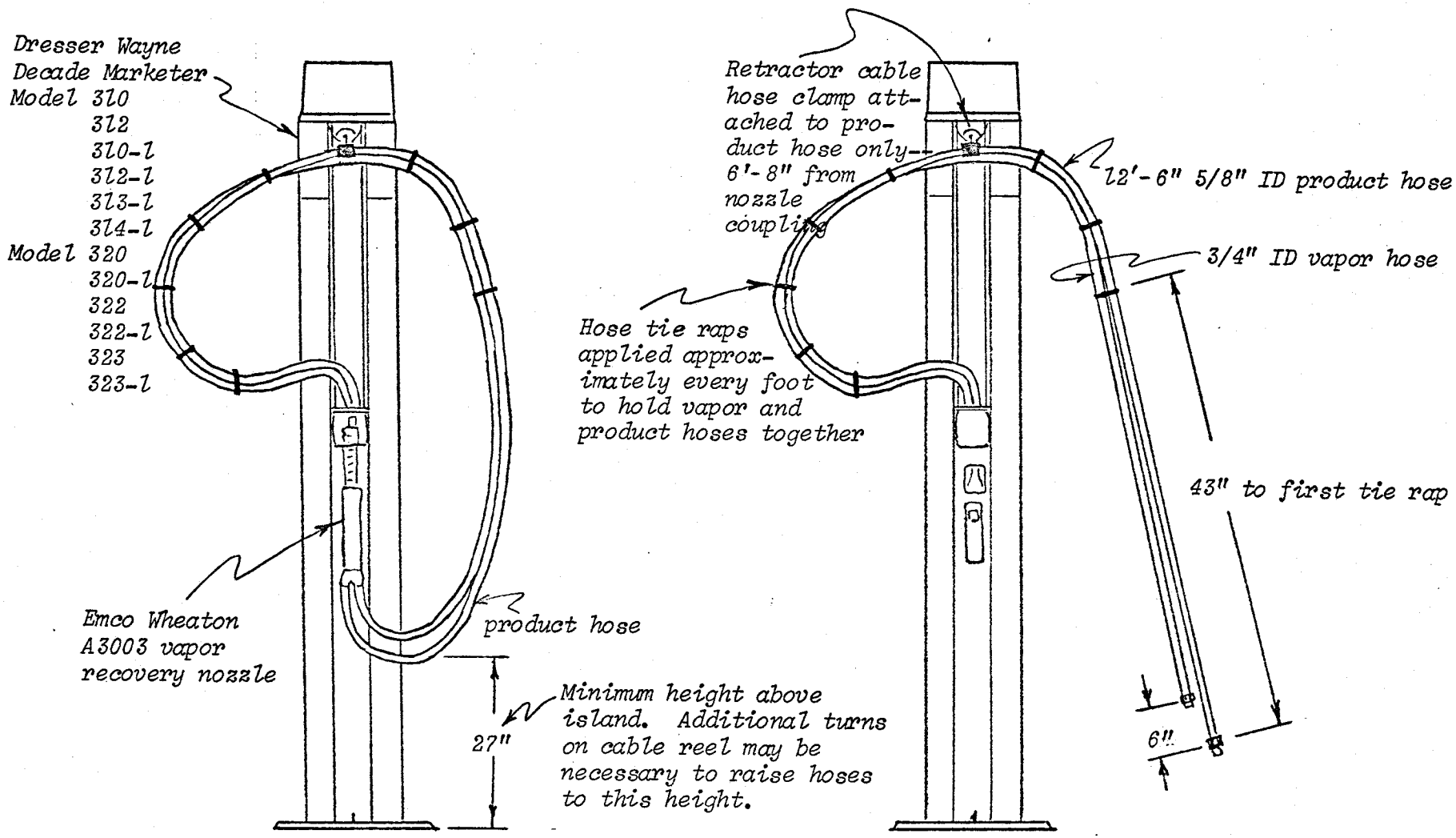

Notes: 1. Recirculation trap not required.
2. Hose swivels not required at dispenser end of hoses.