AIR RESOURCES BOARD

Executive Order G-70-17-E (Corrected 7-11-80)

Relating to the Modification of the Certification of the
Emco Wheaton Balance
Phase II Vapor Recovery System

Pursuant to the authority vested in the Air Resources Board (ARB) by Health and Safety Code Section 41954; and

Pursuant to the authority vested in the undersigned by Health and Safety Code Sections 39515 and 39516;

IT IS ORDERED AND RESOLVED: That the certification Executive Order G-70-17-D issued on February 19, 1980 for the Emco Wheaton balance Phase II vapor collection and disposal system is hereby modified to:

1. Allow eight to nine feet basic hose length for the B.F. Goodrich co-axial hose assembly, described in Exhibits 5, 6, 7, and 8; and

2. To require float check valves (or alternate equipment, design, or operating procedures acceptable to the Air Resources Board) for all manifolded piping installed 150 days after the effective date of this certification modification, to prevent contamination of unleaded gasoline with leaded gasoline, via vapor recovery piping, during storage tank loading or overfill.

The system hereby modified is certified to be at least 95 percent effective in self-serve and/or attendant use at gasoline service stations in conjunction with Phase I vapor recovery systems which have been certified by the Air Resources Board. The system is described in Exhibits 1 through 8, attached hereto.

IT IS FURTHER ORDERED AND RESOLVED: That compliance with the applicable certification requirements and rules and regulations of the Division of Measurement Standards, the State Fire Marshal's Office and the Division of Industrial Safety of the Department of Industrial Relations is made a condition of this certification.

IT IS FURTHER ORDERED AND RESOLVED: That the system certified hereby shall perform in actual use with the same effectiveness as the certification test system. Compliance with the applicable performance criterion shall be a condition of this certification, and failure to meet this criterion shall constitute grounds for revocation, suspension, or modification of this certification.

IT IS FURTHER ORDERED AND RESOLVED: That any alteration to the equipment, parts, design, or operation of the system certified hereby, is prohibited, and deemed inconsistent with this certification, unless such alteration has been approved by the undersigned.

IT IS FURTHER ORDERED AND RESOLVED: That the Emco Wheaton A3003 and A3005 nozzles shall be 100 percent performance checked at the factory including checks of proper functioning of all automatic shut-off mechanisms.

IT IS FURTHER ORDERED AND RESOLVED: That during installation of the Emco Wheaton A3003 and A3005 nozzles they shall be performance tested for ability to dispense gasoline without difficulty in the presence of the station manager or other responsible individual. The station manager, owner or operator shall also be provided with instructions on the proper use of the nozzles, their repair and maintenance, and where nozzle replacements and nozzle components can be readily obtained. A copy of the nozzle warranty shall be made available to the station manager, owner or operator.

IT IS FURTHER ORDERED AND RESOLVED: That in order for vapor return hoses longer than specified in this certification to be used the system shall incorporate a liquid blockage detector which is acceptable to the undersigned.

Executed at Sacramento, California this 16th day of June, 1980.

Thomas C. Austin
Executive Officer

Exhibit 1

Executive Order G-70-17-E

Emco Wheaton Balance Phase II
Vapor Recovery System

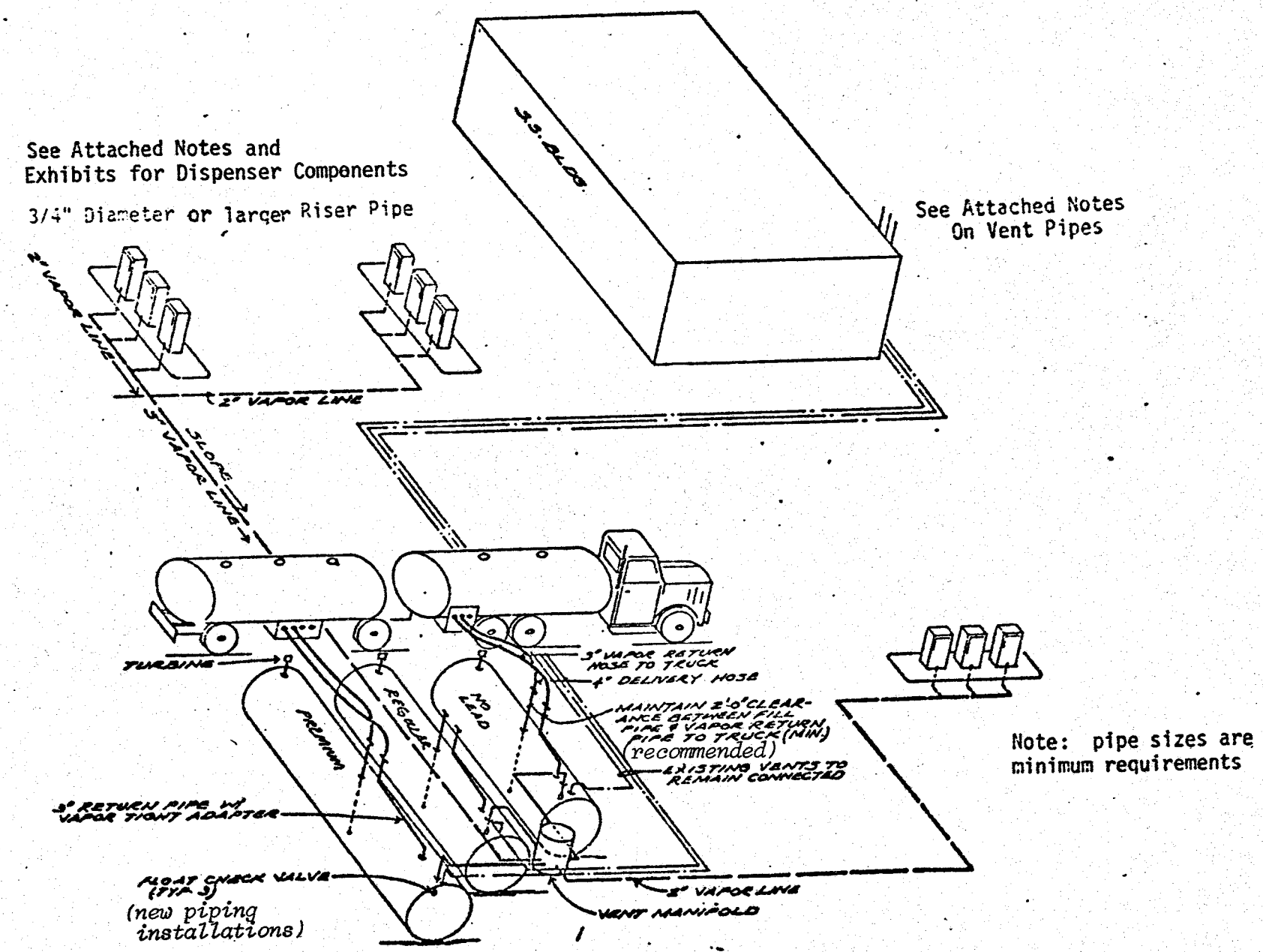

Exhibit 2

Executive Order G-70-17-*E*
Emco Wheaton Balance Phase II
Vapor Recovery System

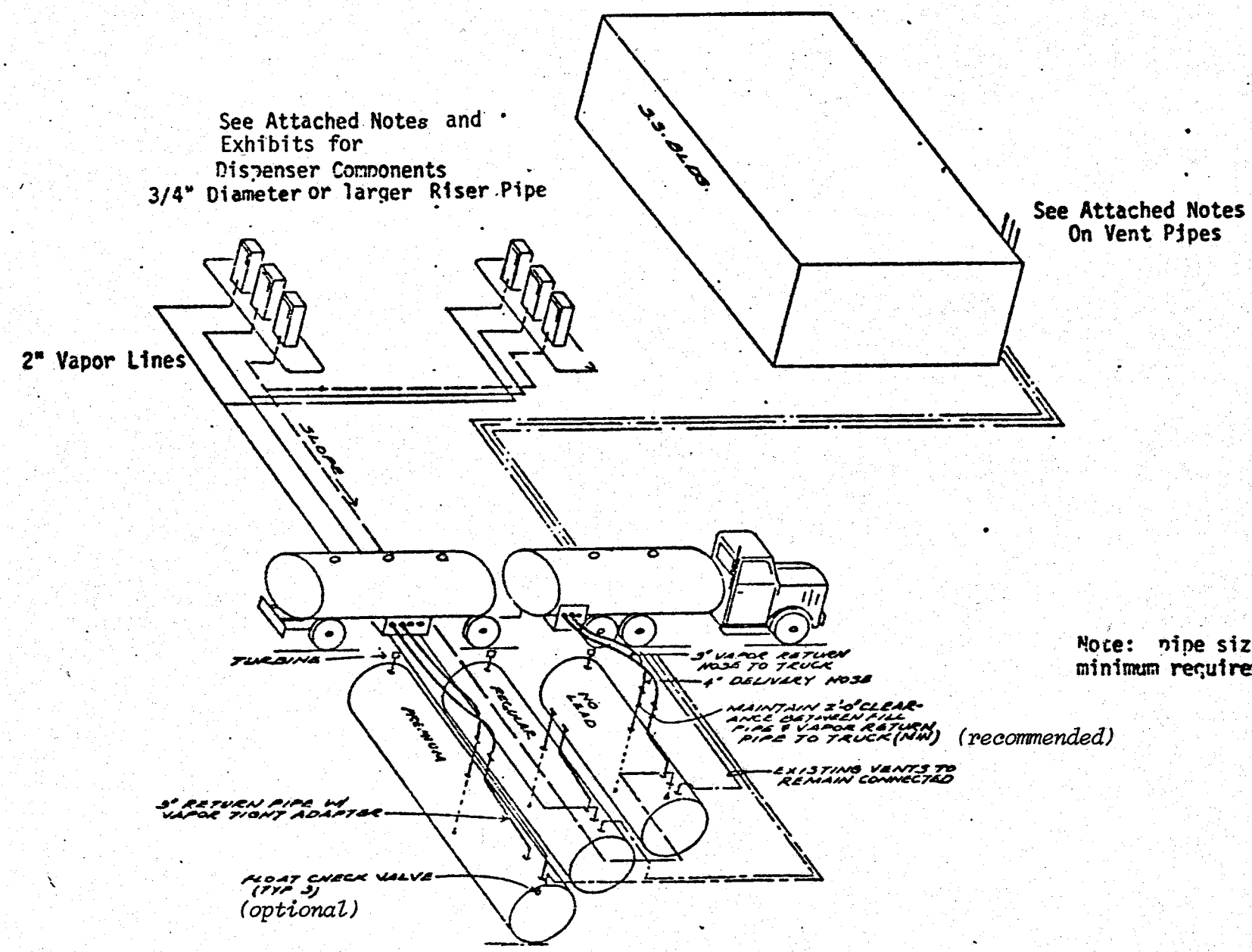

Note: pipe sizes are minimum requirements.

EXHIBIT 3

Executive Order G-70-17-E

Emco Wheaton Phase II Balance

Vapor Recovery System

Component List

Item	Manufacturer and Model	State Fire Marshal Identification Number	Substitute Equipment: Manufacturer and Model	Substitute Equipment: State Fire Marshal Identification Number
1. Nozzle †	Emco Wheaton A3003 (Extended Spout Large Diaphram) Vapor Recovery Nozzle (unleaded)	GVRC 001:007:5		
	Emco Wheaton A3003 (Short Spout, Large Diaphram) Vapor Recovery Nozzle (leaded)			
2. Vapor Hose †	3/4 in. ID by 8* ft.		5/8* in. ID by 8*ft.	
3. Riser	3/4 in. or larger diameter Galvanized Pipe			
4. Swivels †				
a. Nozzle	State Fire Marshal Approved. 0.495 in. ID minimum			
b. Island*	State Fire Marshal Approved. 0.495 in. ID minimum			
5. Flow Limiter	Emco Wheaton A-10	GVRC 001:007:1		
6. Recirculation Trap*	Emco Wheaton A94-001*	GVRC 005:007:8*	OPW 78*, 78-S* 78-E*, or 78-ES*	GVRC 001:008:13*
	Emco Wheaton A95-001*	GVRC 005:007:9*	Emco Wheaton A008-001*	GVRC 001:007:4*

*Not applicable to alternate dispenser configuration, Exhibit 4.

†Not applicable to alternate hose configuration, Exhibits, 5, 6, 7, and 8

Maximum Pressure Drop Through the System‡
(Includes Nozzle, Vapor Hose, Swivels, Recirculation Trap, and Underground Piping)

Flow (CFH)	Δ("H_2O)
20	less than 0.15
60	less than 0.45
100	less than 0.95

‡Pressure drop test to be conducted with drybreak to underground tank open.

EXHIBIT 4

Executive Order G-70-17-*E*
Emco Wheaton Phase II Balance
Vapor Recovery System
Alternate Dispenser Configuration

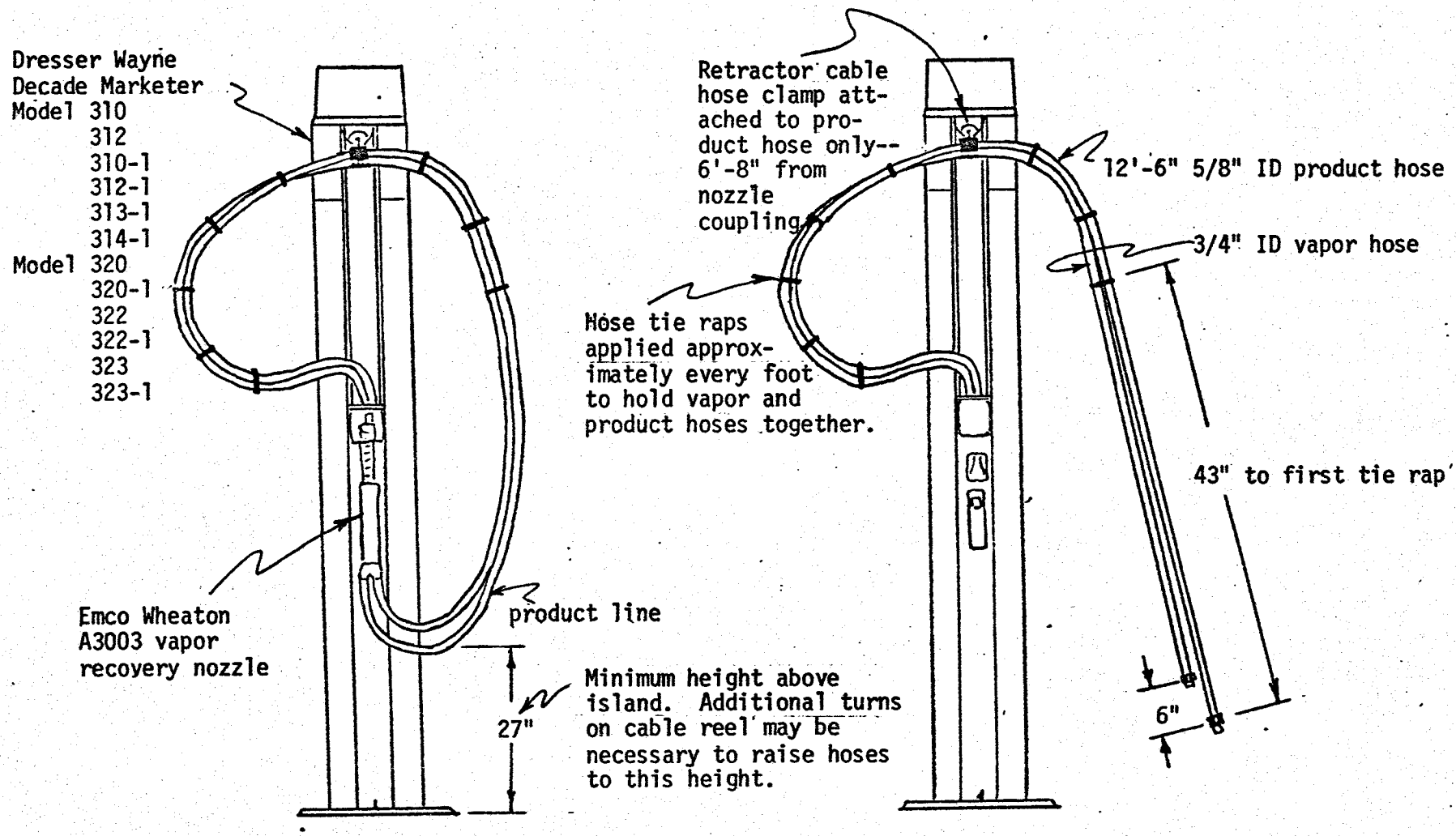

Notes: 1. Recirculation trap not required.
2. Hose swivels not required at dispenser end of hoses.

Exhibit 5

Executive Order G-70-17-*E*
Emco Wheaton Phase II Balance Vapor Recovery System
Alternate Hose Configuration-B.F. Goodrich Co-Axial Hose Assembly
with
Combination Recirculation Trap
and Pump End Swivel
(see Exhibit 8 for Component List)
(see Exhibit 3 for Pressure Drop Requirements)

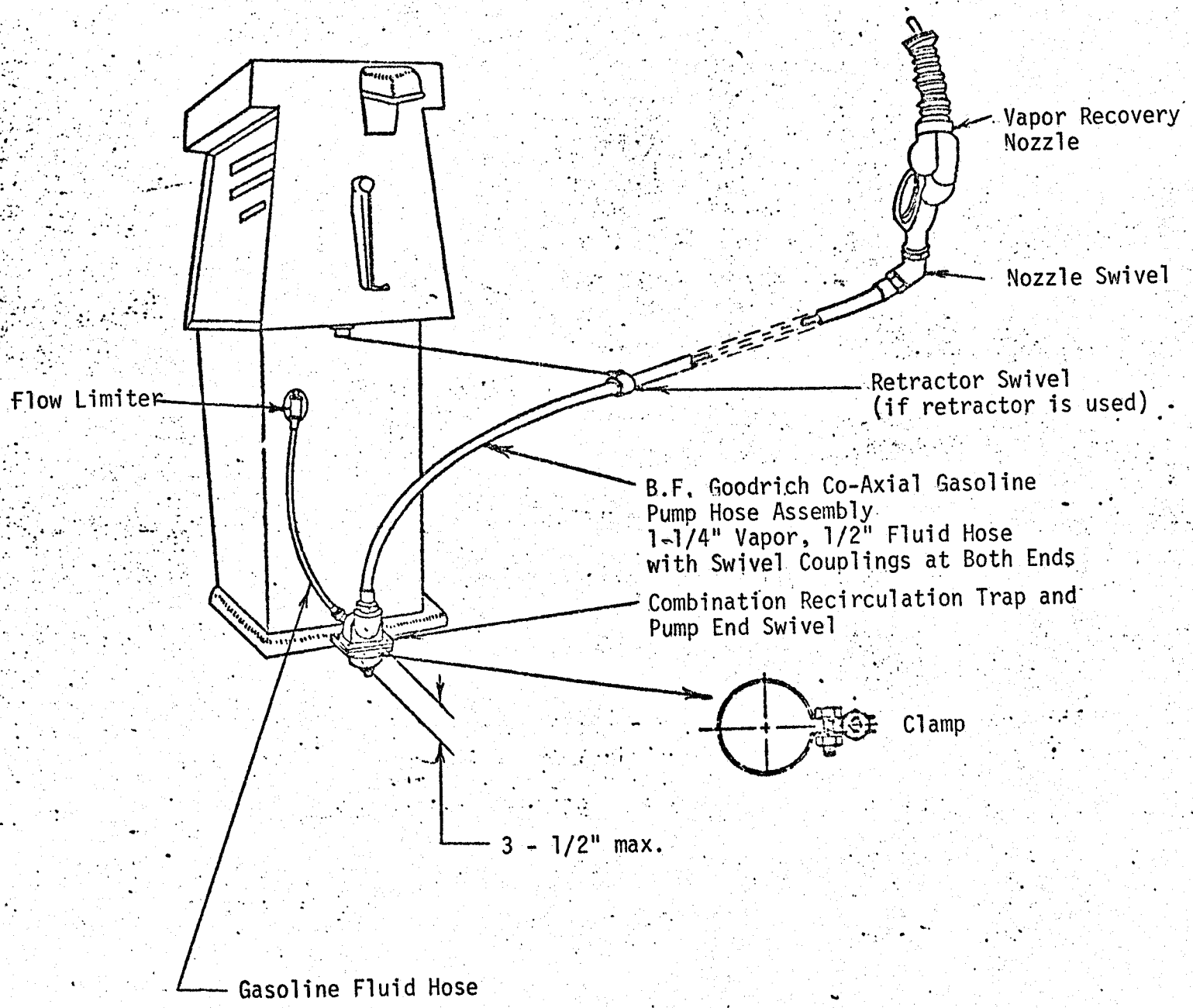

Exhibit 6

Executive Order G-70-17-*E*
Emco Wheaton Phase II Balance Vapor Recovery System
Alternate Hose Configuration B.F. Goodrich Co-Axial Hose Assembly
with
External Pump End Swivel
(see Exhibit 8 for Component List)
(see Exhibit 3 for Pressure Drop Requirements)

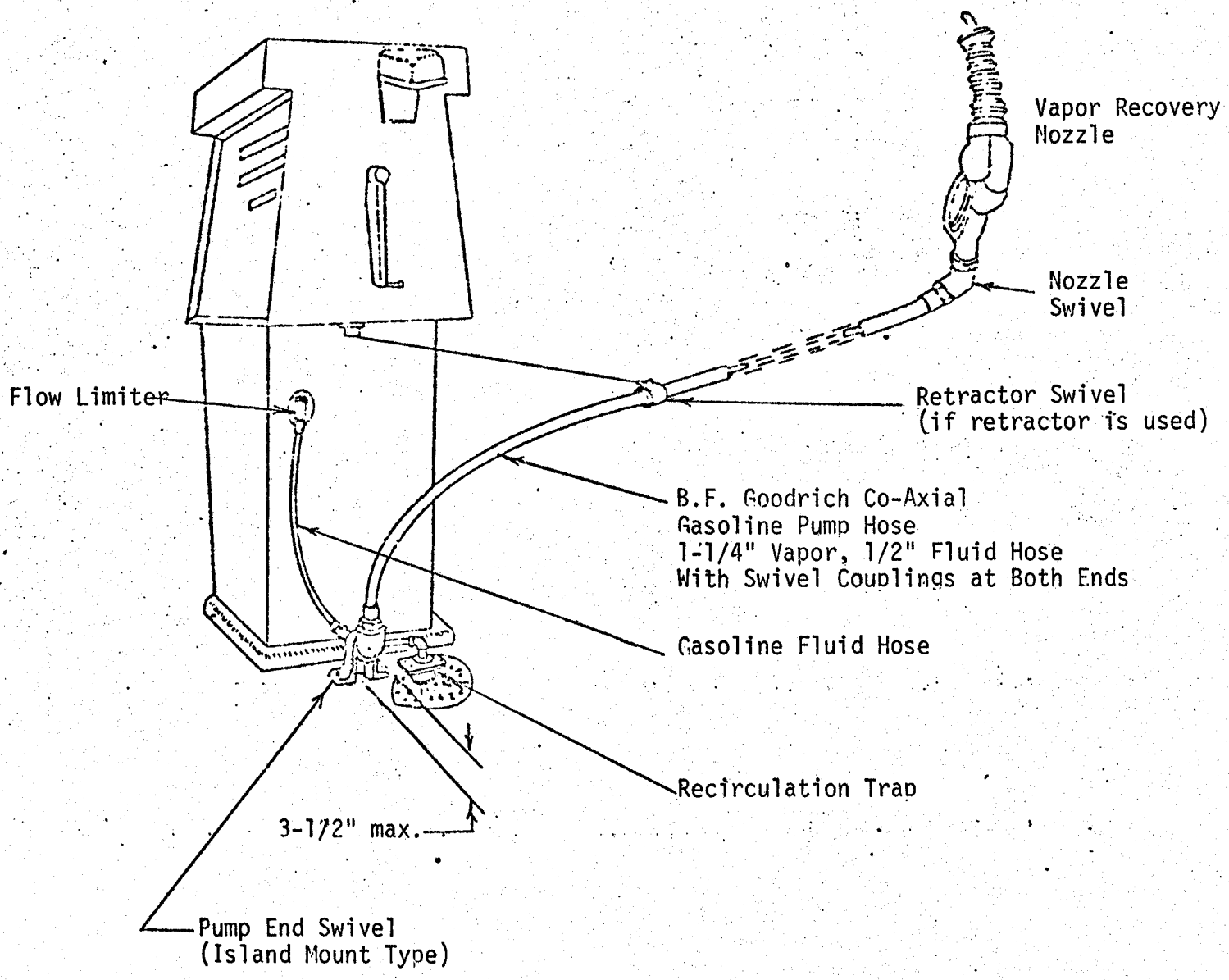

Exhibit 7

Executive Order G-70-17-E
Emco Wheaton Phase II Balance Vapor Recovery System
Alternate Hose Configuration B.F. Goodrich Co-Axial Hose Assembly
with
Internal Pump End Swivel
(see Exhibit 8 for Component List)
(see Exhibit 3 for Pressure Drop Requirements)

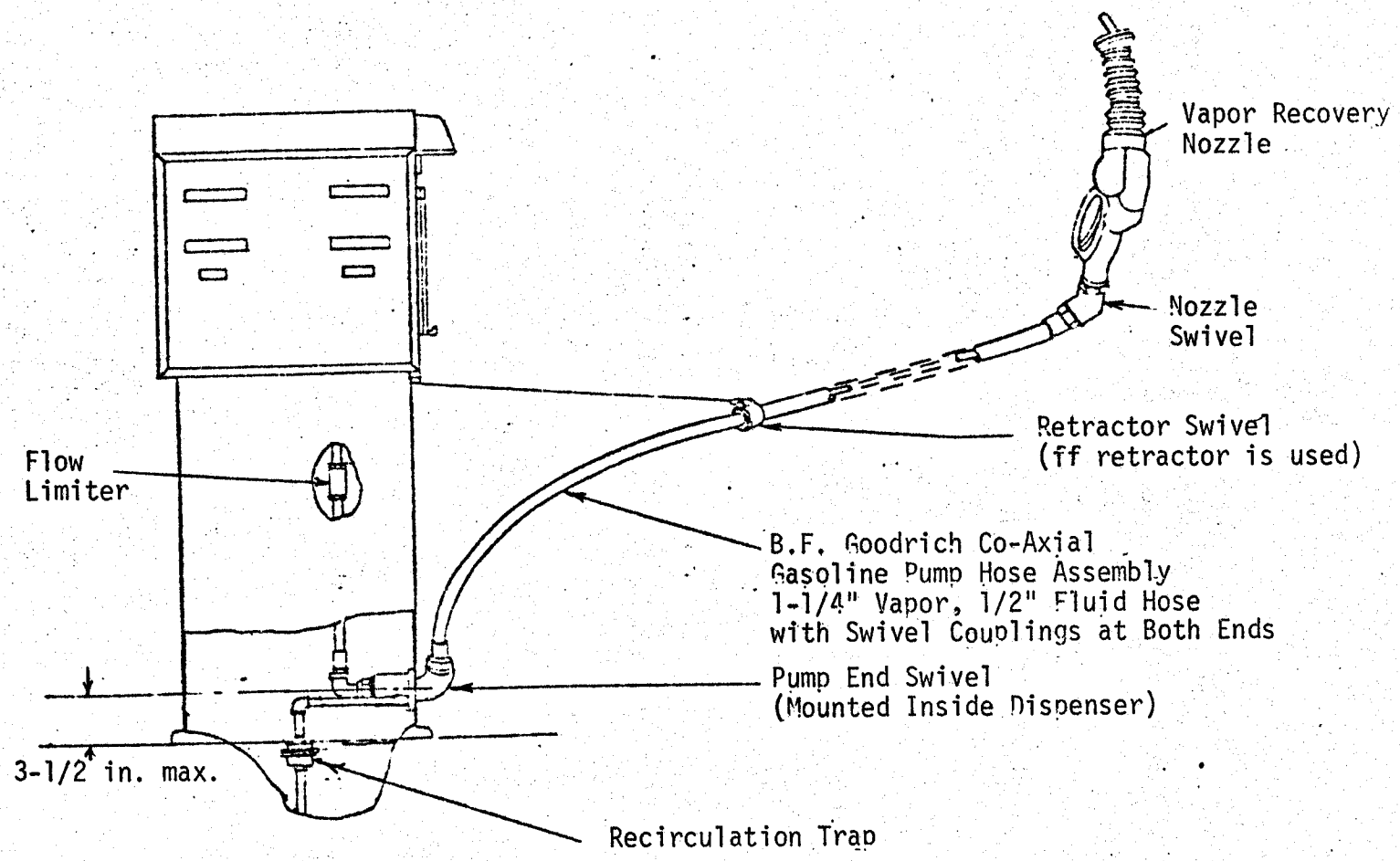

EXHIBIT 8

Executive Order G-70-17-*E*

Emco Wheaton Phase II Balance Vapor Recovery System
Alternate Hose Configuration B.F. Goodrich Co-Axial Hose Assembly
Component List
(See Exhibit 3 for Pressure Drop Requirements)

Item	Manufacturer and Model	State Fire Marshal Identification Number	Substitute Equipment	
			Manufacturer and Model	State Fire Marshal Identification Number
1. Nozzle	Emco Wheaton A3005-002 (Extended Spout, Large Diaphram) Vapor Recovery Nozzle (unleaded)	GVRC 005:007:6		
	Emco Wheaton A3005-001 (Short Spout, Large Diaphram) Vapor Recovery Nozzle (leaded)			
2. Co-Axial Hose	B.F. Goodrich Co-Ax 8 *to 9* feet long	GVRC 005:014:001		
3. Riser	3/4 in. or larger diameter Galvanized Pipe			
4. Swivels				
a. Nozzle	Emco Wheaton A110-001	GVRC 005:007:12		
b. Island	Emco Wheaton A4120-001 (see Exhibit 5) (includes Recirculation Trap) or	GVRC 005:007:7		
	Emco Wheaton A93-001 (see Exhibit 6) or	GVRC 005:007:10		
	A92-001 (see Exhibit 7)	GVRC 005:007:11		
5. Flow Limiter	Emco Wheaton A-10	GVRC 001:007:1		
6. Recirculation Trap	Emco Wheaton A94-001 Emco Wheaton A95-001	GVRC 005:007:8 GVRC 005:007:9	OPW 78, 78-S, 78-E, or 78-ES	GVRC 001:008:13
			Emco Wheaton A008-001	GVRC 001:007:4

Executive Order G-70-17-E

Notes to Accompany Exhibits 1, 2, 3, 4, 5, 6, 7, and 8

1. Vent pipes shall be adequately supported throughout their length and when they are supporting weights in addition to their own, additional supports may be required - anchor to building or other structure.

2. Tank vent pipes two inches or less in nom. inside diameter shall not be obstructed by any device unless the tank and its associated piping & other equipment is protected to limit back pressure development to less than the maximum working pressure of the tank, piping and other equipment by the installation of an approved pressure/vacuum vent, rupture disc or other venting devices installed in the tank vent pipes.

3. Tank vent pipes shall terminate into the open atmosphere and shall be not less than 12 feet above the adjacent ground level. The outlet shall vent upward or horizontally and located to eliminate the possibility of vapors accumulating or traveling to a source of ignition or entering adjacent buildings.

4. All vapor return and vent piping shall be provided with swing joints at the base of the riser to each dispensing unit, at each tank connection, and at the base of the vent riser where it fastens to a building or other structure. When a swing joint is used in a riser containing a shear section the riser must be rigidly supported.

5. Each vapor hose shall be located such that the center line of the hose fitting, at the recirculation trap (if externally mounted) or at the dispenser cabinet swivel mounting (if trap is internally mounted), is not more than 3-1/2 inches above the top surface of the island and is as close as possible to the top surface of the island. (This note does not apply to alternate dispenser configuration, Exhibit 4.)

6. For dispenser islands greater than 5 feet in width, each vapor hose length shall not be longer than the sum of one-half of the dispenser island width, in feet, plus 6 feet. (This note does not apply to alternate dispenser configuration, Exhibit 4.)

7. For only those non-retail outlets which fuel special vehicles, the installation of vapor recovery hoses longer than eight feet are allowed provided the following conditions are met:

   a. The non-retail outlet fuels special vehicles such as large trucks, large skip loaders, off-the-road equipment, etc. where reaching the fill pipe requires longer hoses.

   b. The vapor return hose length is no longer than required.

   c. The vapor return hoses are arranged to be self-draining or provisions are made to drain the hoses after each refueling or the system incorporates an approved liquid blockage detection system arranged to cease dispensing when a blockage occurs.