Executive Order G-70-23-AC

Exhibit 2

Specifications for the Exxon Balance Phase II System

Nozzles

1. The nozzles shall have a vapor valve which prevents the loss of vapor from the underground storage tanks and ensures proper operation of the system. Any nozzle which has a defective vapor valve shall be immediately removed from service. Any nozzle which is associated with a defective remote vapor valve, and which does not contain a properly operating vapor valve, shall be immediately removed from service. The integrity of the system shall be restored by replacing the nozzle or otherwise closing the vapor path as soon as practicable.

2. Nozzles shall be 100 percent performance checked at the factory, including checks of the integrity of the vapor path at a pressure of at least two inches water column. Some nozzles contain a liquid removal system with a check valve in the liquid pick-up tube. The maximum allowable leak rate for the nozzle, including the vapor valve and, if present, the liquid removal system, shall not exceed .038 cubic feet per hour at a pressure of two inches (2") water column. Static pressure decay tests shall be conducted at a pressure of two inches water column as specified in Exhibit 3.

3. Leaded and unleaded spouts are interchangeable.

Dispensing Rate

1. The dispensing rate for installations of the Exxon Balance System shall not exceed 10.0 gallons per minute when only one nozzle associated with the product supply pump is operating. This shall be determined as specified in Exhibit 5.

Breakaway Couplings

1. Breakaway couplings are optional but, if installed, only certified breakaways may be used.

2. The following section does not apply to breakaways that contain a valve which closes the vapor path when it is separated. Operation of the system when a breakaway coupling is separated may allow vapor to escape from, or air to be ingested into, the system. Separated breakaways shall be recoupled, or the vapor path plugged, as soon as practicable. The local district may impose a specific time requirement.

Coaxial Hoses

1. The hoses shall be installed in conformance with the specifications contained in the appropriate revision of Executive Order G-70-52.

Pressure/Vacuum Valves for Storage Tank Vents

1. A pressure/vacuum (P/V) valve shall be installed on each atmospheric tank vent. Vent lines may be manifolded at the atmospheric vent to minimize the number of P/V valves and potential leak sources, provided the manifold is installed at a height not less than 12 feet above the driveway surface used for Phase I tank truck filling operations. If more than one P/V valve is installed on manifolded vents, the valves shall be installed in parallel, so that each can serve as a backup for the other if one should fail to open properly. The P/V valve shall be CARB-certified as specified in Exhibit 1. The outlets shall vent upward and be located to eliminate the possibility of vapor accumulating or traveling to a source of ignition or entering adjacent buildings.

   Facilities which were installed prior to the effective date of this Order may be operated without P/V valves provided that there is no less than one vapor connection between the cargo tank compartment and the storage tank involved in each Phase I product delivery.

Vapor Recovery Piping Configurations

1. The vapor recovery piping shall be installed as specified in Figures 2A and 2B.

2. For vapor piping installed after the effective date of this Order, the maximum allowable pressure drops through the system, including nozzle, hose, and all vapor piping, in inches water column (" wc) at flowrates in cubic feet per hour (CFH), shall be:

   0.16" wc at a flow of 40 CFH
   0.35" wc at a flow of 60 CFH
   0.62" wc at a flow of 80 CFH

   For vapor piping installed before the effective date of this Order, the corresponding maximum allowable pressure drops through the system shall be:

   0.15" wc at a flow of 20 CFH
   0.45" wc at a flow of 60 CFH
   0.95" wc at a flow of 100 CFH

   The facility must be in compliance with all of the above pressure drop requirements when tested as specified in Exhibit 3. Local districts may impose more stringent criteria on installations which involve new vapor recovery piping, or replacement or modification of existing underground vapor recovery piping.

3. For vapor piping installed after the effective date of this Order, all vapor return lines shall slope a minimum of 1/8 inch per foot. A slope of 1/4 inch or more per foot is recommended wherever feasible.

4. The dispenser shall be connected to the riser with either flexible or rigid material which is listed for use with gasoline. The dispenser-to-riser connection shall be installed so that any liquid in the lines will drain toward the storage tank. The internal diameter of the connector, including all fittings, shall not be less than five-eighths inch (5/8").

6. All vapor return and vent piping shall be installed in accordance with the manufacturer's instructions and all applicable regulations.

5. The nominal inside diameter of the underground Phase II plumbing is as indicated in Figures 2A and 2B. The vapor return lines shall be manifolded below grade at the tanks as indicated in the figures.

7. No product shall be dispensed from any fueling point associated with a vapor line which is disconnected and open to the atmosphere. If vapor lines are manifolded, this includes all fueling points in the facility.

Storage Tank and Phase I System

WARNING: Phase I fill caps should be opened with caution because the storage tank may be under pressure.

1. Spill containment manholes which have drain valves shall demonstrate compliance with the static pressure decay criteria with the drain valves installed as in normal operation. Manholes with cover-actuated drain valves shall not be used in new installations (as defined above). Manholes with cover-actuated drain valves may remain in use in facilities where installation of the Exxon Balance System does not require modification of the tank fittings provided the facility demonstrates compliance with static pressure decay test criteria both with the cover open and with the cover closed. The local district may require the removal of drain valves provided an alternate method of draining the spill container is specified (i.e., a hand pump maintained at the facility and/or on the product delivery trucks.)

2. Phase I deliveries to systems installed before the effective date of this Order, and which do not have pressure vacuum vent valves, shall be accomplished so as to ensure that there is no less than one Phase I vapor hose connecting the storage tank to the cargo tank compartment headspace for each product hose connected.

3. Phase I deliveries to systems with pressure vacuum vent valves shall be accomplished so as to ensure that there is at least one vapor connection between the cargo tank compartment headspace and the storage tank associated with the product delivery. There shall be no more than two product hoses used with one vapor hose connected, and no more than three product hoses used with two vapor hoses connected.

4. The Phase I vapor recovery system shall be operated during product deliveries so as to minimize the loss of vapors from the facility storage tank which may be under pressure. Provided it is not in conflict with established safety procedures, this may be accomplished in the following manner:

    - the Phase I vapor return hose is connected to the delivery tank and to the delivery elbow before the elbow is connected to the facility storage tank;

- the delivery tank is opened only after all vapor connections have been made, and is closed before disconnection of any vapor return hoses; and

- the vapor return hose is disconnected from the facility storage tank before it is disconnected from the delivery tank.

5. Storage tank vent pipes shall be maintained white, silver or beige. Colors which will similarly prevent heating of the system due to solar gain may also be used, provided they are listed in EPA AP-42 as having a factor the same as or better than that of the colors listed above.
   Existing facilities which were installed before April 1, 1996, must be in compliance with this requirement no later than January 1, 1998.

Non-Retail Fueling of Special Vehicles

1. For non-retail outlets which fuel special vehicles, the installation of vapor recovery hoses longer than those specified in this Order are allowed if the following conditions are met:

   a. The non-retail outlet fuels special vehicles such as large trucks, large skip loaders, off-the-road equipment, etc., where reaching the fill pipe requires longer hoses.

   b. At least one of the following conditions exists:

      - A liquid system is installed capable of removing any accumulation of liquid which may occur with the proposed hose configuration;

      - The hoses are arranged to be self-draining;

      - Provisions are made to drain the hoses after each refueling;

      - The system incorporates an approved liquid blockage detection system arranged to cease dispensing when a blockage occurs.

   c. The Executive Officer has approved the plans for compliance with Condition b.

EXECUTIVE ORDER G-70-23-AC
FIGURE 2A
EXXON BALANCED VAPOR RECOVERY SYSTEM

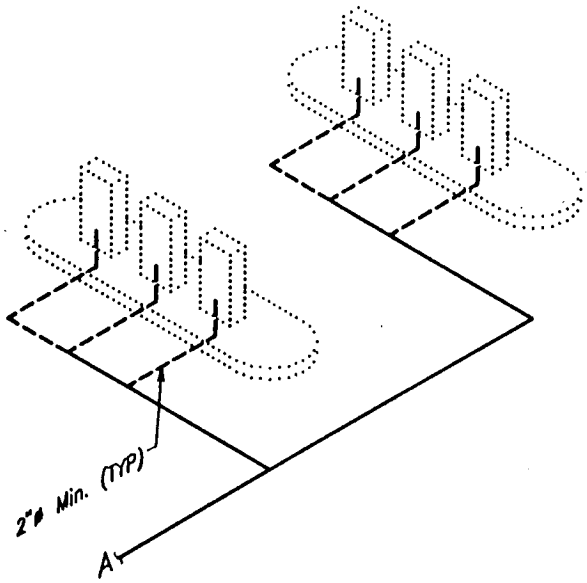

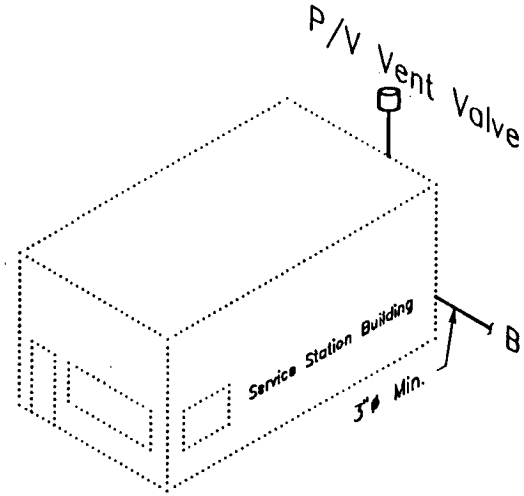

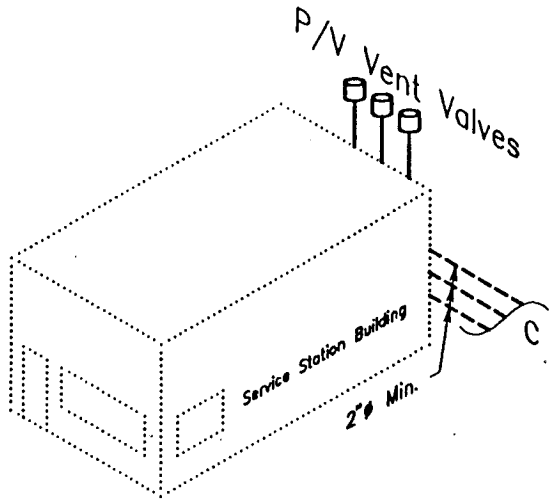

NOTES:

1. Vapor hose(s) to truck MUST return vapors to the cargo compartment from which product is being delivered. IN ADDITION, a minimum of one phase 1 vapor hose must be connected while delivering with two product hoses. ALSO, a minimum of two phase 1 vapor hoses must be connected while delivering with three product hoses.
2. CARB certified pressure vacuum vent valve (3"±0.5" W.C. pressure and 8"±2" W.C. vacuum shall be installed.
3. All lines are nominal ø's & 3"ø min. except as noted.
4. Truck vapor return hoses are 3" (nominal) ø min.
5. Truck delivery hoses are 4" (nominal) ø max.

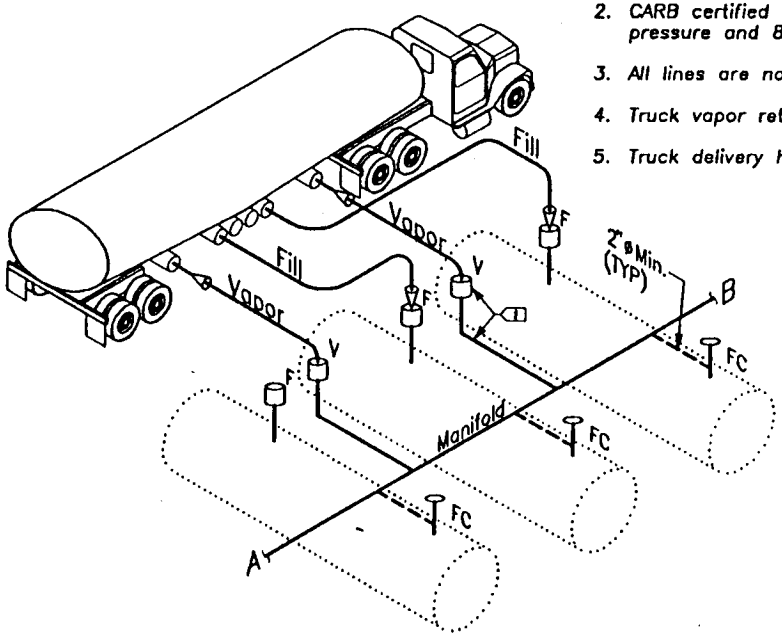

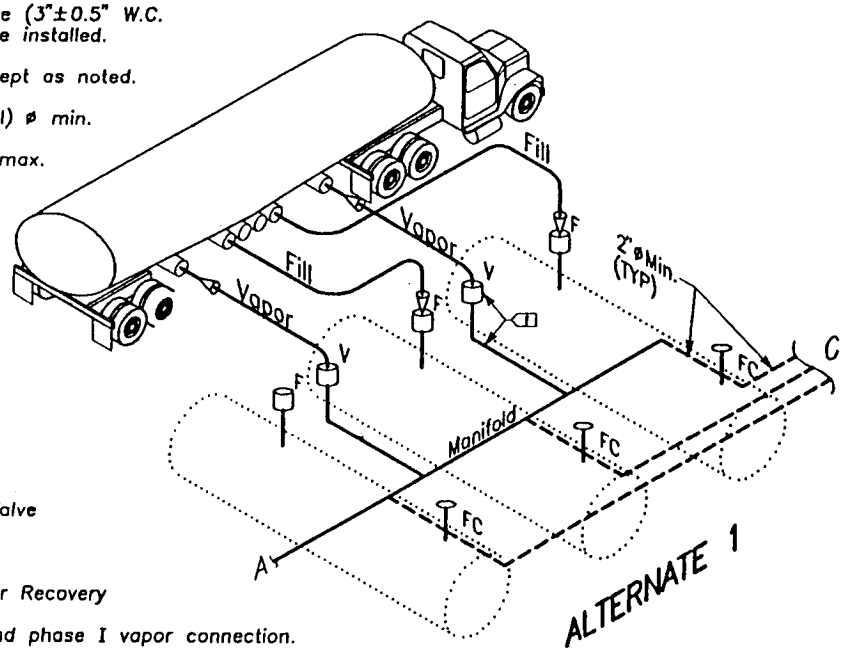

KEY:

FC = Float Check Valve

F = Fill Line

V = Phase 1 Vapor Recovery

[1] = Optional second phase I vapor connection.

STG1C.DWG
TFW 4/22/96

EXECUTIVE ORDER G-70-23-AC
FIGURE 2B
EXXON BALANCED VAPOR RECOVERY SYSTEM

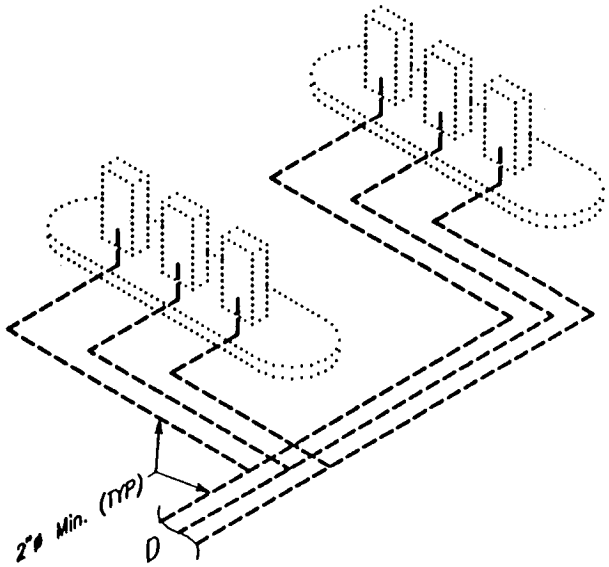

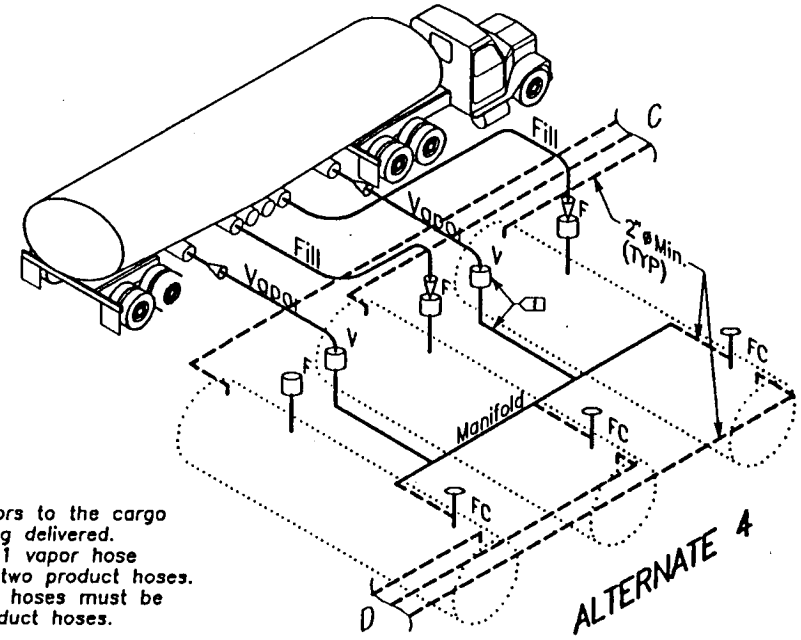

NOTES:

1. Vapor hose(s) to truck MUST return vapors to the cargo compartment from which product is being delivered. IN ADDITION, a minimum of one phase 1 vapor hose must be connected while delivering with two product hoses. ALSO, a minimum of two phase 1 vapor hoses must be connected while delivering with three product hoses.
2. CARB certified pressure vacuum vent valve (3"±0.5" W.C. pressure and 8"±2" W.C. vacuum shall be installed.
3. All lines are nominal ø's & 3"ø min. except as noted.
4. Truck vapor return hoses are 3" (nominal) ø min.
5. Truck delivery hoses are 4" (nominal) ø max.

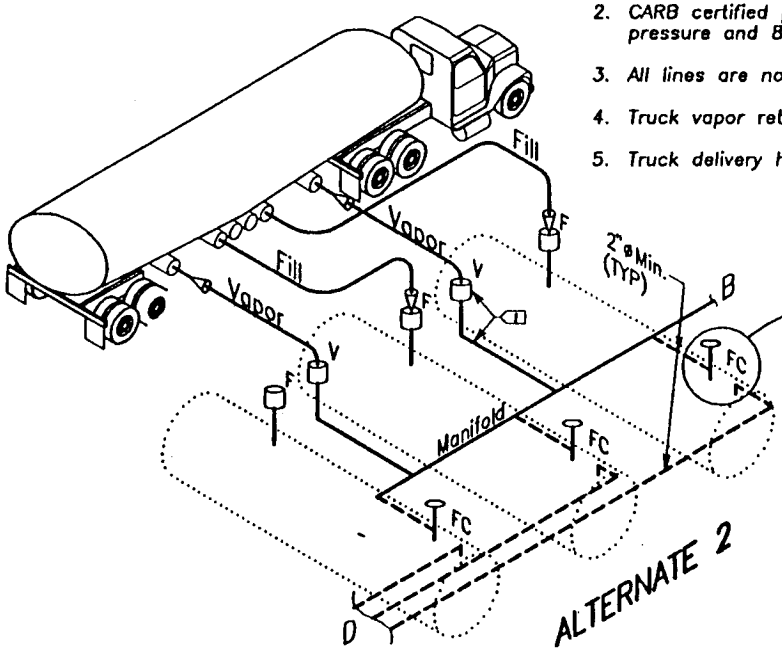

OPTIONAL FC ATTACHMENT

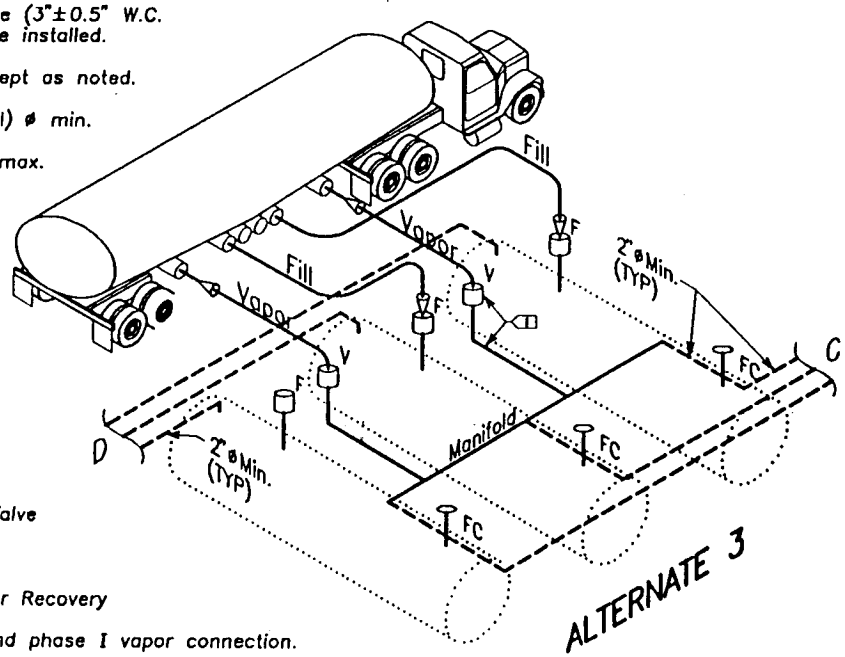

KEY:

FC = Float Check Valve

F = Fill Line

V = Phase 1 Vapor Recovery

[1] = Optional second phase I vapor connection.

STG1C.DWG
TFW 4/22/96