EXECUTIVE ORDER G-70-23-AC
FIGURE 2A
EXXON BALANCED VAPOR RECOVERY SYSTEM

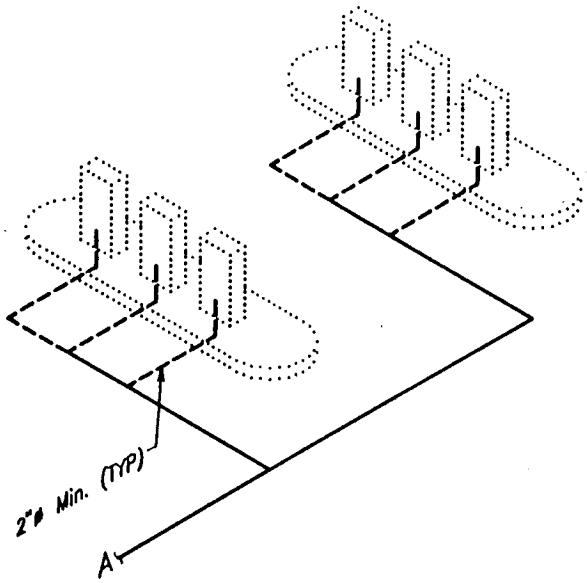

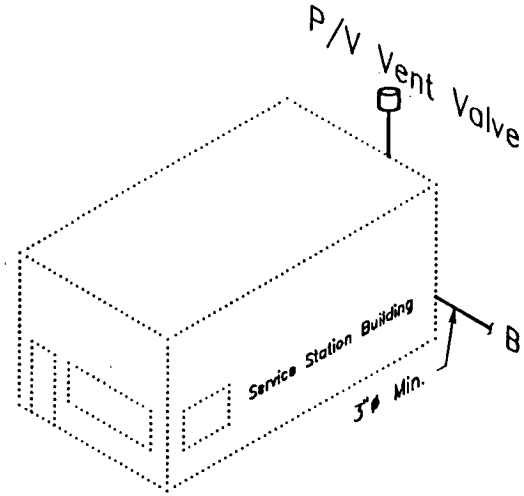

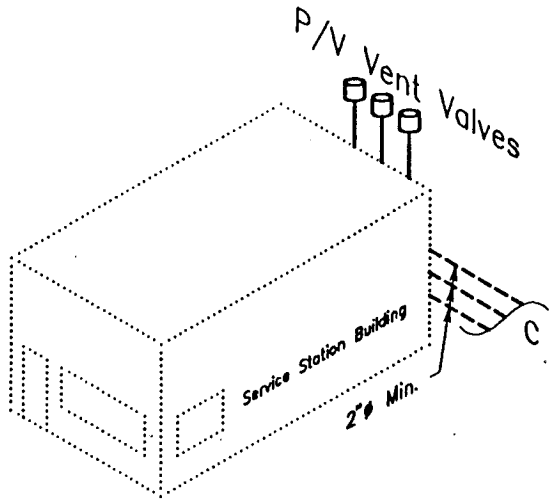

NOTES:

1. Vapor hose(s) to truck MUST return vapors to the cargo compartment from which product is being delivered. IN ADDITION, a minimum of one phase 1 vapor hose must be connected while delivering with two product hoses. ALSO, a minimum of two phase 1 vapor hoses must be connected while delivering with three product hoses.
2. CARB certified pressure vacuum vent valve (3"±0.5" W.C. pressure and 8"±2" W.C. vacuum shall be installed.
3. All lines are nominal ø's & 3"ø min. except as noted.
4. Truck vapor return hoses are 3" (nominal) ø min.
5. Truck delivery hoses are 4" (nominal) ø max.

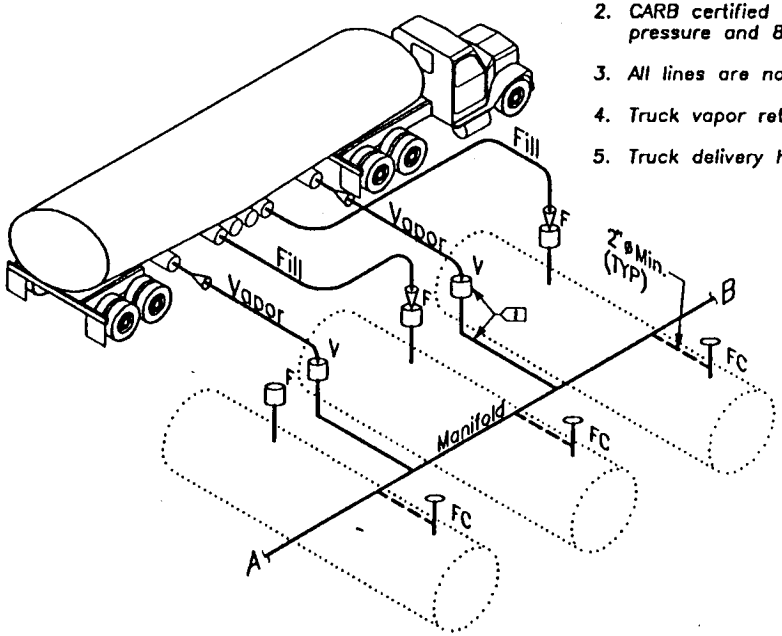

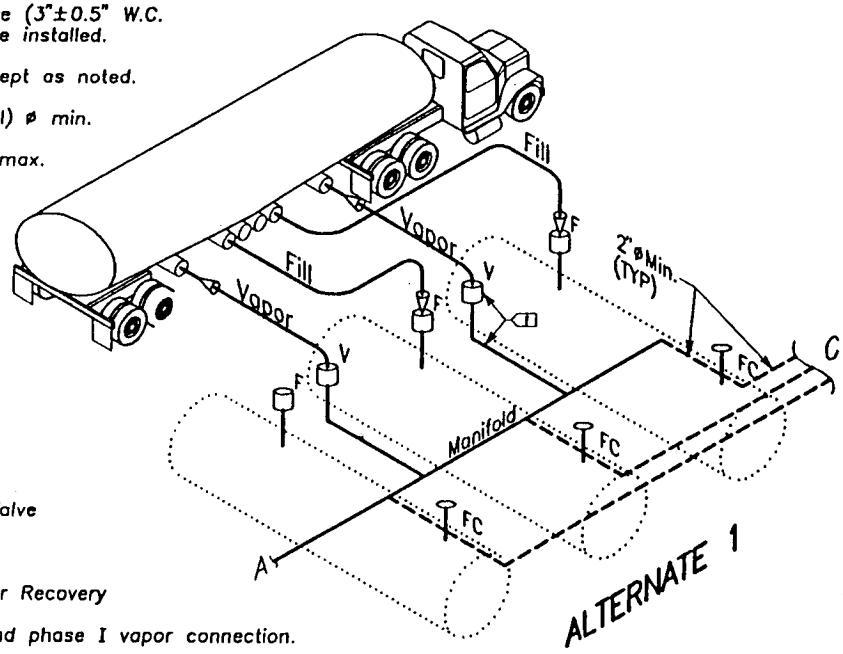

KEY:

FC = Float Check Valve

F = Fill Line

V = Phase 1 Vapor Recovery

[1] = Optional second phase I vapor connection.

STG1C.DWG
TFW 4/22/96