State of California
AIR RESOURCES BOARD

Executive Order G-70-23-AC
Modification to the Certification of the Exxon Balance Phase II Vapor Recovery System

WHEREAS, the California Air Resources Board ("the Board" or "CARB") has established, pursuant to California Health and Safety Code Sections 39600, 39601 and 41954, certification procedures for systems designed for the control of gasoline vapor emissions during motor vehicle fueling operations ("Phase II vapor recovery systems") in its "Certification Procedures for Gasoline Vapor Recovery Systems at Service Stations" as last amended December 4, 1981 (the "Certification Procedures"), incorporated by reference into Title 17, California Code of Regulations, Section 94001;

WHEREAS, the Board has established, pursuant to California Health and Safety Code Sections 39600, 39601 and 41954, test procedures for determining the compliance of Phase I and Phase II vapor recovery systems with emission standards in its "Test Procedures for Determining the Efficiency of Gasoline Vapor Recovery Systems at Service Stations" as last amended September 1, 1982 (the "Test Procedures"), incorporated by reference into Title 17, California Code of Regulations, Section 94000;

WHEREAS, Exxon Company, U.S.A. ("Exxon") requested and was granted certification of the Exxon Balance Phase II vapor recovery system (the "Exxon Balance System") pursuant to the Certification Procedures and Test Procedures, on August 4, 1978, by Executive Order G-70-23;

WHEREAS, Exxon requested and was granted certification of a modification of the Exxon Balance System to include an alternate Phase I vapor return and vent piping configuration on May 14, 1990, by Executive Order G-70-23-AB;

WHEREAS, Exxon requested certification of an additional modification to the Exxon Balance System to allow the use of two Phase I product hoses with one vapor connection, or three product hoses with two vapor connections, subject to the addition of a pressure/vacuum valve on the tank vents and the conditions contained in this Order;

WHEREAS, the modified Exxon Balance System has been evaluated pursuant to the Board's Certification Procedures;

WHEREAS, Section VIII-A of the Certification Procedures provides that the Executive Officer shall issue an order of certification if he or she determines that the vapor recovery system conforms to all of the requirements set forth in Sections I through VII of the Certification Procedures; and

WHEREAS, I, James D. Boyd, Air Resources Board Executive Officer, find that the modified Exxon Balance System conforms with all the requirements set forth in Sections I through VII of the Certification Procedures, and results in a vapor recovery system which is at least 95 percent effective for attendant and/or self-serve use at gasoline service stations.

NOW, THEREFORE, IT IS HEREBY ORDERED that the Exxon Balance System, when installed as specified in Exhibits 1 and 2 of this Order, is certified to be at least 95 percent effective in attended and/or self-serve mode. Exhibit 1 contains a list of the equipment certified for use with the Exxon system. Exhibit 2 contains installation and performance specifications for the system. Exhibit 3 contains the static pressure decay test procedure. Exhibit 4 contains the dynamic back pressure test procedure. Exhibit 5 contains the flowrate procedure.

IT IS FURTHER ORDERED that all systems installed after the effective date of this Order shall include pressure/vacuum vent valves as specified in Exhibits 1 and 2.

IT IS FURTHER ORDERED that the dispensing rate for installations of the Exxon Balance System shall not exceed ten (10.0) gallons per minute when only one nozzle associated with the product supply pump is operating, as specified in Exhibit 5.

IT IS FURTHER ORDERED that compliance with the certification requirements and rules and regulations of the Division of Measurement Standards of the Department of Food and Agriculture, the State Fire Marshal's Office, and the Division of Occupational Safety and Health of the Department of Industrial Relations is made a condition of this certification.

IT IS FURTHER ORDERED that the following requirements are made a condition of certification. The Exxon Balance system shall be installed only in facilities which are capable of demonstrating on-going compliance with the vapor integrity requirements contained in Exhibit 3 of this Order. The owner or operator of the installation shall conduct, and pass, a static pressure decay test at least once in each twelve month period, and the results shall be made available to the district upon request within fifteen days after the test is conducted, or within fifteen days of the request. Alternative test procedures may be used if determined by the Executive Officer, in writing, to yield comparable results.

IT IS FURTHER ORDERED that the system, as installed, shall comply with the procedures and performance standards the test installation was required to meet during certification testing. Local districts may adopt stricter procedures or performance standards in accordance with the California Health and Safety Code section 41954 (g). Failure to demonstrate compliance with district procedures or performance standards stricter than those imposed during certification testing does not, per se, constitute failure of the Exxon Balance System to meet the terms and conditions of this Executive Order. If, in the judgment of the Executive Officer, a significant fraction of installations fail to meet the specifications of this certification, or if a significant portion of the vehicle population is found to have configurations which significantly impair the system's collection efficiency, the certification itself may be subject to modification, suspension or revocation.

IT IS FURTHER ORDERED that all nozzles approved for use with the Exxon Balance System shall be 100 percent performance checked at the factory, including checks of the integrity of the vapor and liquid paths as specified in Exhibit 2 of this Order, and of the proper functioning of all automatic shut-off mechanisms.

IT IS FURTHER ORDERED that the certified Exxon Balance System shall, at a minimum, be operated in accordance with the manufacturer's recommended maintenance intervals and shall use the manufacturer's recommended operation, installation, and maintenance procedures.

IT IS FURTHER ORDERED that the certified Exxon Balance System shall be performance tested during installation for ability to dispense gasoline and collect vapors without difficulty, in the presence of the station operator, owner or designee. The station operator, owner or designee shall be provided with copies of the installation and maintenance manuals for the certified Exxon Balance System and components, to be maintained at the station, and shall also be provided with instructions in the proper use of the certified Exxon Balance System, its repair and maintenance, and where and how system and/or component replacements can be readily obtained.

IT IS FURTHER ORDERED that any alteration of the equipment, parts, design, or operation of the systems certified hereby is prohibited, and deemed inconsistent with this certification, unless such alteration has been approved by the Executive Officer or his/her designee.

IT IS FURTHER ORDERED that the Exxon Balance System certification Executive Order G-70-23-AB, issued May 14, 1990, is hereby superseded by this Executive Order.

Executed at Sacramento, California, this 29th day of April, 1996.

James D. Boyd
Executive Officer

Attachments

Executive Order G-70-23-AC

Exhibit 1
Exxon Balance System Equipment List

Component	Manufacturer/Model	State Fire Marshal Identification Number
Pressure/Vacuum Valve	OPW 523LP, 523LPS (settings as specified below)	005:008:051
	Hazlett H-PVB-1 Gold label (settings as specified below)	005:017:004
	Morrison Brothers 749CRB0600 AV (settings as specified below)	005:041:001
	OR Any CARB-certified valve with the following pressure and vacuum settings, in inches water column (wc): Pressure: three plus or minus one-half inches (3.0 ± 0.5") wc. Vacuum: eight plus or minus two inches (8 ± 2") wc. Note: Pressure/vacuum valves with the following settings which were installed before September 30, 1995, may be used until September 30, 1999. Local districts may require earlier replacement of these valves. Pressure: at least 1 and not to exceed 3.5 inches wc. Vacuum: at least one-half ounce per square inch (0.87" wc).	
Phase I Adaptors	Any CARB-certified device which prevents loosening or overtightening of the Phase I product and vapor adaptors. Note: For systems installed before two CARB-certified devices which prevent loosening or overtightening of the Phase I product and vapor adaptors are available, or within sixty days after that date, any CARB-certified Phase I product or vapor adaptor may be used for a period not to exceed four years from the date the second device was certified. Local districts may require earlier conversion to such devices.	
Phase II Components	For a listing of the nozzles, hoses, breakaway couplings, liquid removal systems, and other system components and dispenser configurations certified for use with this system, refer to the appropriate revision of Executive Order G-70-52.	

Executive Order G-70-23-AC

Exhibit 2

Specifications for the Exxon Balance Phase II System

Nozzles

1. The nozzles shall have a vapor valve which prevents the loss of vapor from the underground storage tanks and ensures proper operation of the system. Any nozzle which has a defective vapor valve shall be immediately removed from service. Any nozzle which is associated with a defective remote vapor valve, and which does not contain a properly operating vapor valve, shall be immediately removed from service. The integrity of the system shall be restored by replacing the nozzle or otherwise closing the vapor path as soon as practicable.

2. Nozzles shall be 100 percent performance checked at the factory, including checks of the integrity of the vapor path at a pressure of at least two inches water column. Some nozzles contain a liquid removal system with a check valve in the liquid pick-up tube. The maximum allowable leak rate for the nozzle, including the vapor valve and, if present, the liquid removal system, shall not exceed .038 cubic feet per hour at a pressure of two inches (2") water column. Static pressure decay tests shall be conducted at a pressure of two inches water column as specified in Exhibit 3.

3. Leaded and unleaded spouts are interchangeable.

Dispensing Rate

1. The dispensing rate for installations of the Exxon Balance System shall not exceed 10.0 gallons per minute when only one nozzle associated with the product supply pump is operating. This shall be determined as specified in Exhibit 5.

Breakaway Couplings

1. Breakaway couplings are optional but, if installed, only certified breakaways may be used.

2. The following section does not apply to breakaways that contain a valve which closes the vapor path when it is separated. Operation of the system when a breakaway coupling is separated may allow vapor to escape from, or air to be ingested into, the system. Separated breakaways shall be recoupled, or the vapor path plugged, as soon as practicable. The local district may impose a specific time requirement.

Coaxial Hoses

1. The hoses shall be installed in conformance with the specifications contained in the appropriate revision of Executive Order G-70-52.

Pressure/Vacuum Valves for Storage Tank Vents

1. A pressure/vacuum (P/V) valve shall be installed on each atmospheric tank vent. Vent lines may be manifolded at the atmospheric vent to minimize the number of P/V valves and potential leak sources, provided the manifold is installed at a height not less than 12 feet above the driveway surface used for Phase I tank truck filling operations. If more than one P/V valve is installed on manifolded vents, the valves shall be installed in parallel, so that each can serve as a backup for the other if one should fail to open properly. The P/V valve shall be CARB-certified as specified in Exhibit 1. The outlets shall vent upward and be located to eliminate the possibility of vapor accumulating or traveling to a source of ignition or entering adjacent buildings.

   Facilities which were installed prior to the effective date of this Order may be operated without P/V valves provided that there is no less than one vapor connection between the cargo tank compartment and the storage tank involved in each Phase I product delivery.

Vapor Recovery Piping Configurations

1. The vapor recovery piping shall be installed as specified in Figures 2A and 2B.

2. For vapor piping installed after the effective date of this Order, the maximum allowable pressure drops through the system, including nozzle, hose, and all vapor piping, in inches water column (" wc) at flowrates in cubic feet per hour (CFH), shall be:

   0.16" wc at a flow of 40 CFH
   0.35" wc at a flow of 60 CFH
   0.62" wc at a flow of 80 CFH

   For vapor piping installed before the effective date of this Order, the corresponding maximum allowable pressure drops through the system shall be:

   0.15" wc at a flow of 20 CFH
   0.45" wc at a flow of 60 CFH
   0.95" wc at a flow of 100 CFH

   The facility must be in compliance with all of the above pressure drop requirements when tested as specified in Exhibit 3. Local districts may impose more stringent criteria on installations which involve new vapor recovery piping, or replacement or modification of existing underground vapor recovery piping.

3. For vapor piping installed after the effective date of this Order, all vapor return lines shall slope a minimum of 1/8 inch per foot. A slope of 1/4 inch or more per foot is recommended wherever feasible.

4. The dispenser shall be connected to the riser with either flexible or rigid material which is listed for use with gasoline. The dispenser-to-riser connection shall be installed so that any liquid in the lines will drain toward the storage tank. The internal diameter of the connector, including all fittings, shall not be less than five-eighths inch (5/8").

6. All vapor return and vent piping shall be installed in accordance with the manufacturer's instructions and all applicable regulations.

5. The nominal inside diameter of the underground Phase II plumbing is as indicated in Figures 2A and 2B. The vapor return lines shall be manifolded below grade at the tanks as indicated in the figures.

7. No product shall be dispensed from any fueling point associated with a vapor line which is disconnected and open to the atmosphere. If vapor lines are manifolded, this includes all fueling points in the facility.

Storage Tank and Phase I System

WARNING: Phase I fill caps should be opened with caution because the storage tank may be under pressure.

1. Spill containment manholes which have drain valves shall demonstrate compliance with the static pressure decay criteria with the drain valves installed as in normal operation. Manholes with cover-actuated drain valves shall not be used in new installations (as defined above). Manholes with cover-actuated drain valves may remain in use in facilities where installation of the Exxon Balance System does not require modification of the tank fittings provided the facility demonstrates compliance with static pressure decay test criteria both with the cover open and with the cover closed. The local district may require the removal of drain valves provided an alternate method of draining the spill container is specified (i.e., a hand pump maintained at the facility and/or on the product delivery trucks.)

2. Phase I deliveries to systems installed before the effective date of this Order, and which do not have pressure vacuum vent valves, shall be accomplished so as to ensure that there is no less than one Phase I vapor hose connecting the storage tank to the cargo tank compartment headspace for each product hose connected.

3. Phase I deliveries to systems with pressure vacuum vent valves shall be accomplished so as to ensure that there is at least one vapor connection between the cargo tank compartment headspace and the storage tank associated with the product delivery. There shall be no more than two product hoses used with one vapor hose connected, and no more than three product hoses used with two vapor hoses connected.

4. The Phase I vapor recovery system shall be operated during product deliveries so as to minimize the loss of vapors from the facility storage tank which may be under pressure. Provided it is not in conflict with established safety procedures, this may be accomplished in the following manner:

    - the Phase I vapor return hose is connected to the delivery tank and to the delivery elbow before the elbow is connected to the facility storage tank;

- the delivery tank is opened only after all vapor connections have been made, and is closed before disconnection of any vapor return hoses; and

- the vapor return hose is disconnected from the facility storage tank before it is disconnected from the delivery tank.

5. Storage tank vent pipes shall be maintained white, silver or beige. Colors which will similarly prevent heating of the system due to solar gain may also be used, provided they are listed in EPA AP-42 as having a factor the same as or better than that of the colors listed above.
   Existing facilities which were installed before April 1, 1996, must be in compliance with this requirement no later than January 1, 1998.

Non-Retail Fueling of Special Vehicles

1. For non-retail outlets which fuel special vehicles, the installation of vapor recovery hoses longer than those specified in this Order are allowed if the following conditions are met:

   a. The non-retail outlet fuels special vehicles such as large trucks, large skip loaders, off-the-road equipment, etc., where reaching the fill pipe requires longer hoses.

   b. At least one of the following conditions exists:

      - A liquid system is installed capable of removing any accumulation of liquid which may occur with the proposed hose configuration;

      - The hoses are arranged to be self-draining;

      - Provisions are made to drain the hoses after each refueling;

      - The system incorporates an approved liquid blockage detection system arranged to cease dispensing when a blockage occurs.

   c. The Executive Officer has approved the plans for compliance with Condition b.

EXECUTIVE ORDER G-70-23-AC
FIGURE 2A
EXXON BALANCED VAPOR RECOVERY SYSTEM

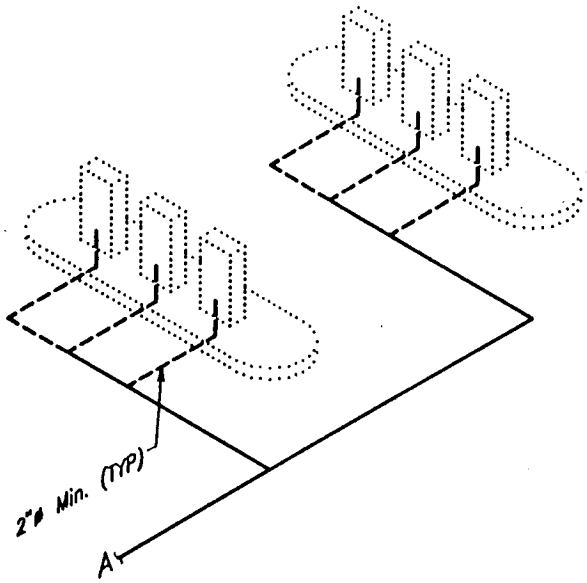

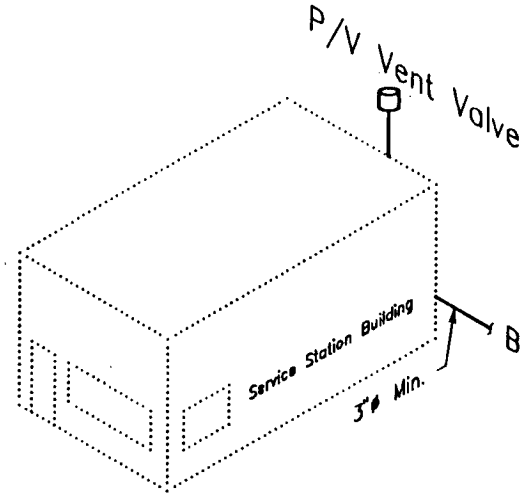

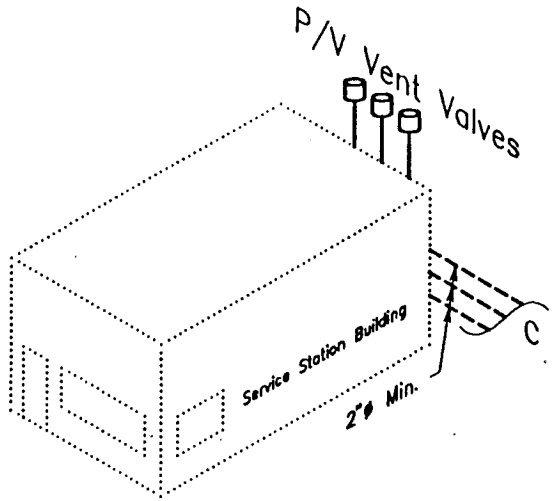

NOTES:

1. Vapor hose(s) to truck MUST return vapors to the cargo compartment from which product is being delivered. IN ADDITION, a minimum of one phase 1 vapor hose must be connected while delivering with two product hoses. ALSO, a minimum of two phase 1 vapor hoses must be connected while delivering with three product hoses.
2. CARB certified pressure vacuum vent valve (3"±0.5" W.C. pressure and 8"±2" W.C. vacuum shall be installed.
3. All lines are nominal ø's & 3"ø min. except as noted.
4. Truck vapor return hoses are 3" (nominal) ø min.
5. Truck delivery hoses are 4" (nominal) ø max.

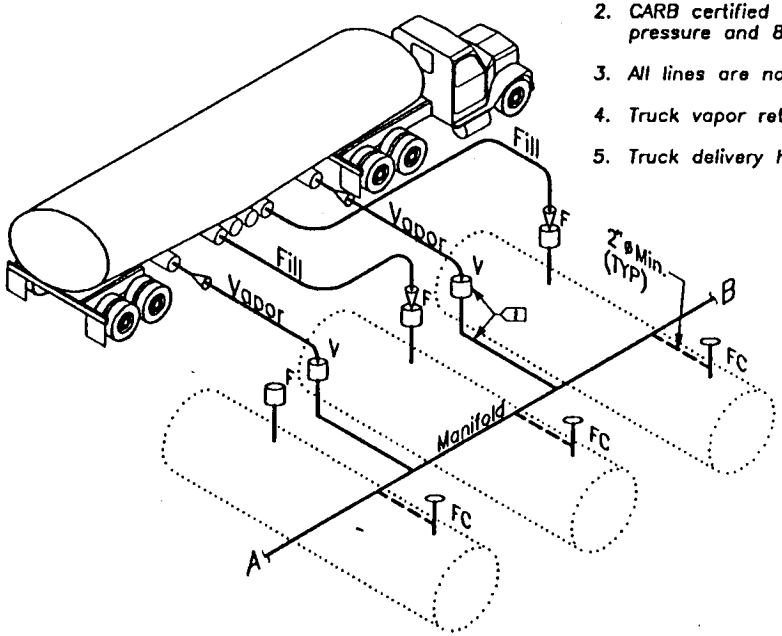

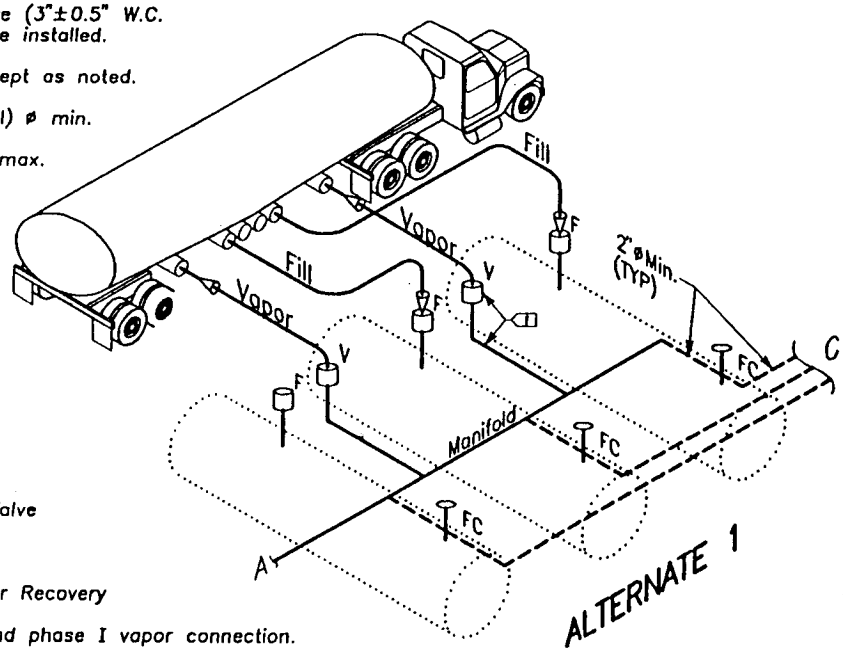

KEY:

FC = Float Check Valve

F = Fill Line

V = Phase 1 Vapor Recovery

[1] = Optional second phase I vapor connection.

STG1C.DWG
TFW 4/22/96

EXECUTIVE ORDER G-70-23-AC
FIGURE 2B
EXXON BALANCED VAPOR RECOVERY SYSTEM

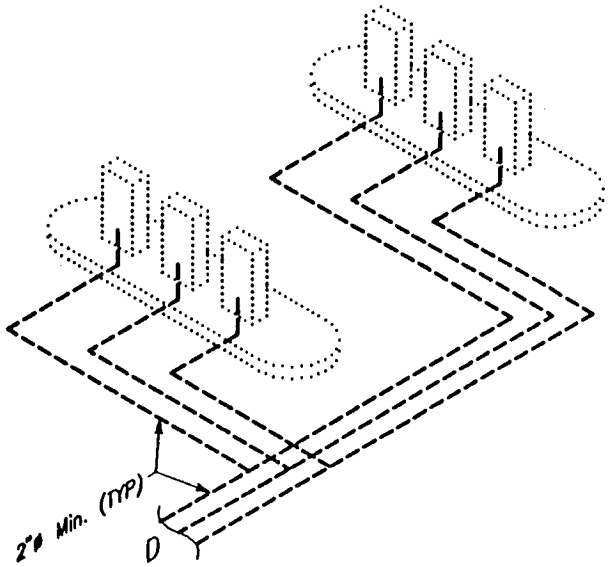

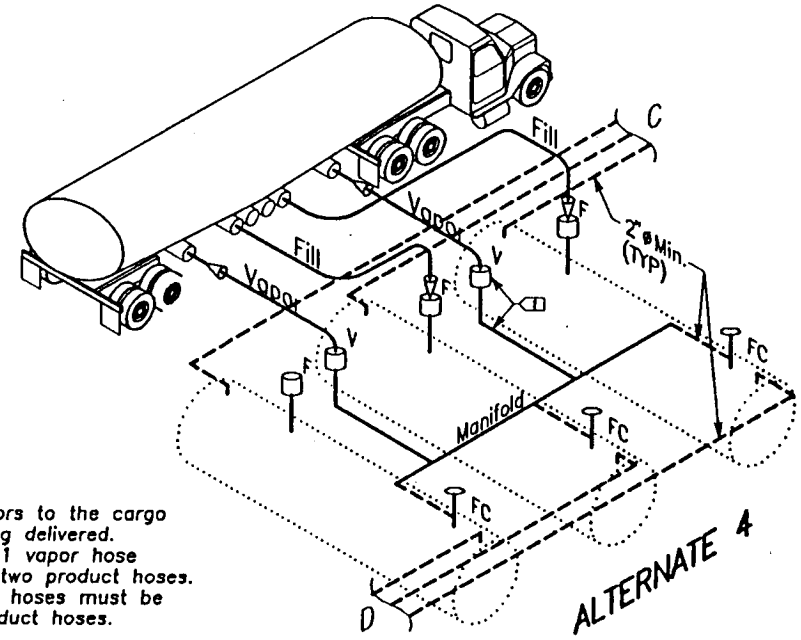

NOTES:

1. Vapor hose(s) to truck MUST return vapors to the cargo compartment from which product is being delivered. IN ADDITION, a minimum of one phase 1 vapor hose must be connected while delivering with two product hoses. ALSO, a minimum of two phase 1 vapor hoses must be connected while delivering with three product hoses.
2. CARB certified pressure vacuum vent valve (3"±0.5" W.C. pressure and 8"±2" W.C. vacuum shall be installed.
3. All lines are nominal ø's & 3"ø min. except as noted.
4. Truck vapor return hoses are 3" (nominal) ø min.
5. Truck delivery hoses are 4" (nominal) ø max.

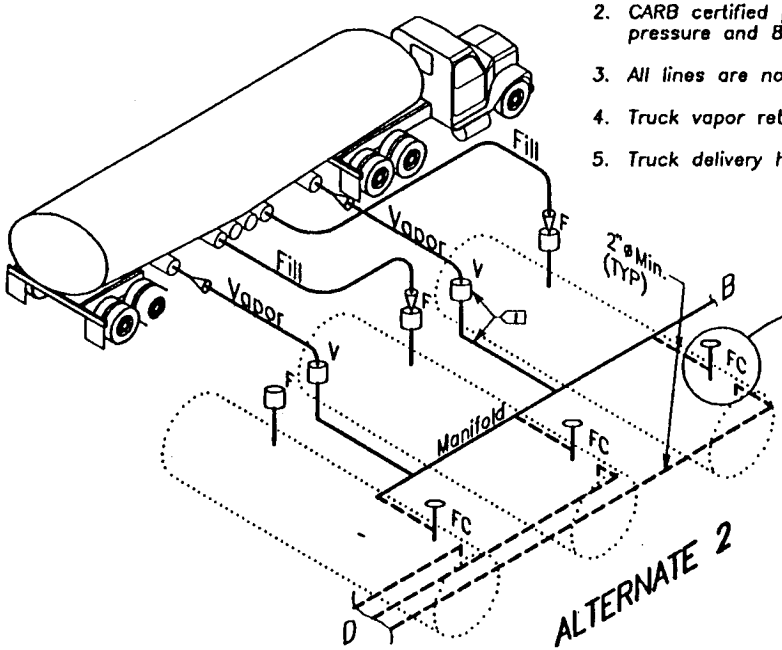

OPTIONAL FC ATTACHMENT

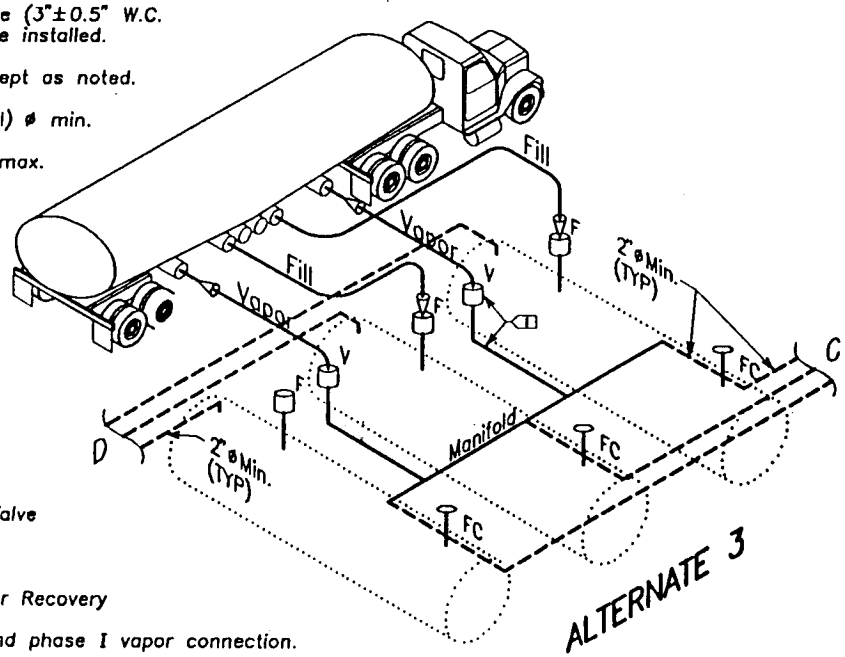

KEY:

FC = Float Check Valve

F = Fill Line

V = Phase 1 Vapor Recovery

[1] = Optional second phase I vapor connection.

STG1C.DWG
TFW 4/22/96

Executive Order G-70-23-AC

Exhibit 3

STATIC PRESSURE INTEGRITY TEST UNDERGROUND STORAGE TANKS

1. APPLICABILITY

1.1 This test procedure is used to quantify the vapor tightness of vapor recovery systems installed at gasoline dispensing facilities (GDF) equipped with pressure/vacuum (P/V) valves, provided that the designed pressure setting of the P/V valves is a minimum of 2.5 inches of water column (inches H_2O). Excessive leaks in the vapor recovery system will increase the quantity of fugitive hydrocarbon emissions and lower the overall efficiencies of both the Phase I and Phase II vapor recovery systems.

1.2 Systems equipped with a P/V valve(s) allowed to have a designed cracking pressure less than 2.5 inches H_2O shall be bagged to eliminate any flow contribution through the valve assembly from the test results. The valve/vent pipe connection, however, shall remain unobstructed during this test.

1.3 At facilities not required to be equipped with a P/V valve(s), the vent pipe(s) shall be capped. For those installations, the test may be conducted at the vent pipe(s).

2. PRINCIPLE

2.1 The entire vapor recovery system is pressurized with nitrogen to two (2.0) inches H_2O. The system pressure is then allowed to decay and the pressure after five (5) minutes is compared with an allowable value. The minimum allowable five-minute final pressure is based on the system ullage and pressure decay equations. For the purpose of compliance determination, this test shall be conducted after all back-filling, paving, and installation of all Phase I and Phase II components, including P/V valves, has been completed.

2.2 This test may be conducted at either a Phase II riser or a Phase I vapor coupler provided that the criteria set forth in Section 6.7 have been met. If the integrity criteria for the Phase I system specified in Section 6.7 is met, it is recommended that this test be conducted at the Phase I vapor coupler.

3. RANGE

3.1 If mechanical pressure gauges are employed, the full-scale range of the pressure gauges shall be 0-2.0, 0-1.0, and 0-0.50 inches H_2O column. Maximum incremental graduations of the pressure gauge shall be 0.05 inches H_2O and the minimum accuracy of the gauge shall be three percent of full scale. The minimum diameter of the pressure gauge face shall be 4 inches.

*Reference Bay Area Air Quality Management District Source Test Procedure ST-30

3.2 If an electronic pressure measuring device is used, the full-scale range of the device shall not exceed 0-10 inches H_2O with a minimum accuracy of 0.5 percent of full-scale. A 0-20 inches H_2O device may be used, provided the equivalent accuracy is not less than 0.25 percent of full scale.

3.3 The minimum and maximum total ullages shall be 500 and 25,000 gallons, respectively. These values are exclusive of all vapor piping volumes.

3.4 The minimum and maximum nitrogen feed-rates, into the system, shall be one (1) and five (5) CFM, respectively.

Figure 3-1

"T" Connector Assembly

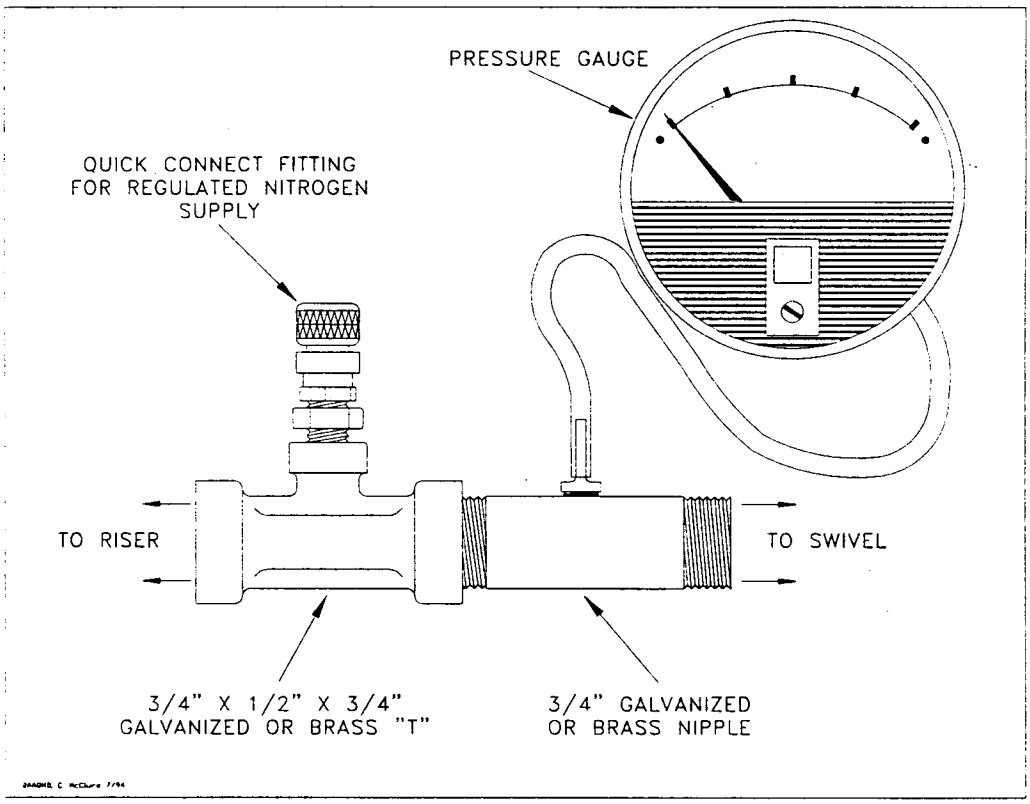

4. INTERFERENCES

4.1 Introduction of nitrogen into the system at flowrates exceeding five (5) CFM may bias the results of the test toward non-compliance. Only gaseous nitrogen shall be used to conduct this test. Air, liquified Nitrogen, helium, or any gas other than nitrogen **shall not be used** for this test procedure.

4.2 The results of this Static Pressure Integrity Test shall not be used to verify compliance if a Dynamic Back Pressure Test was conducted within twenty-four (24) hours prior to this test.

5. APPARATUS

5.1 Nitrogen. Use commercial grade nitrogen in a high pressure cylinder, equipped with a two-stage pressure regulator and a one psig pressure relief valve.

5.2 Pressure Measuring Device. Use 0-2.0, 0-1.0, and 0-0.50 inches H_2O pressure gauges connected in parallel, a 0-2 inches H_2O manometer, or an electronic pressure measuring device to monitor the pressure decay in the vapor recovery system. The pressure measuring device shall, at a minimum, be readable to the nearest 0.05 inches H_2O.

Figure 3-2

Vapor Coupler Integrity Assembly

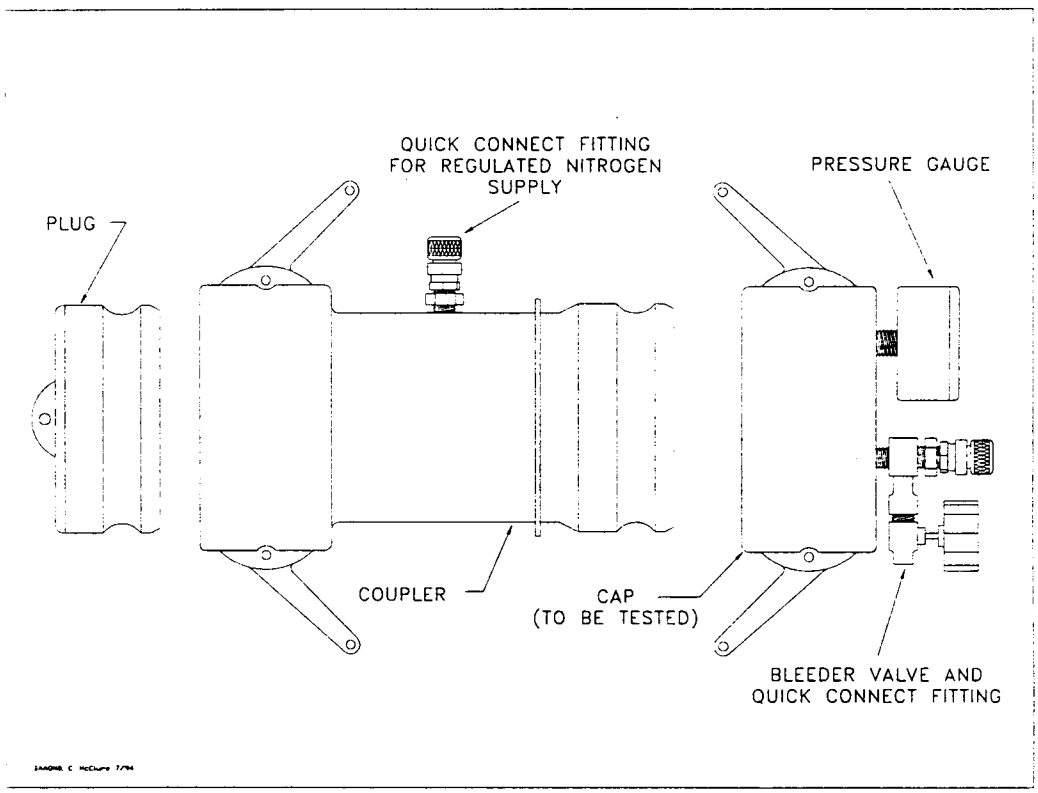

5.3 "T" Connector Assembly. See Figure 3.1 for example.

5.4 Vapor Coupler Integrity Assembly. Assemble OPW 633-A, 633-B, and 634-A adapters, or equivalent, as shown in Figure 3-2. If the test is to be conducted at the storage tank Phase I vapor coupler, this assembly shall be used prior to conducting the static leak test in order to verify the pressure integrity of the vapor poppet. The internal volume of this assembly shall not exceed 0.1 cubic feet.

5.5 Vapor Coupler Test Assembly. Use a compatible OPW 634-B cap, or equivalent, equipped with a center probe to open the poppet, a pressure measuring device to monitor the pressure decay, and a connection for the introduction of nitrogen into the system. See Figure 3-3 for an example.

5.6 Stopwatch. Use a stopwatch accurate to within 0.2 seconds.

5.7 Flowmeter. Use a Dwyer flowmeter, Model RMC-104, or equivalent, to determine the required pressure setting of the delivery pressure gauge on the nitrogen supply pressure regulator. This pressure shall be set such that the nitrogen flowrate is between 1.0 and 5.0 CFM.

5.8 Combustible Gas Detector. A Bacharach Instrument Company, Model 0023-7356, or equivalent, may be used to verify the pressure integrity of system components during this test.

5.9 Leak Detection Solution. Any liquid solution designed to detect vapor leaks may be used to verify the pressure integrity of system components during this test.

Figure 3-3

Vapor Coupler Test Assembly

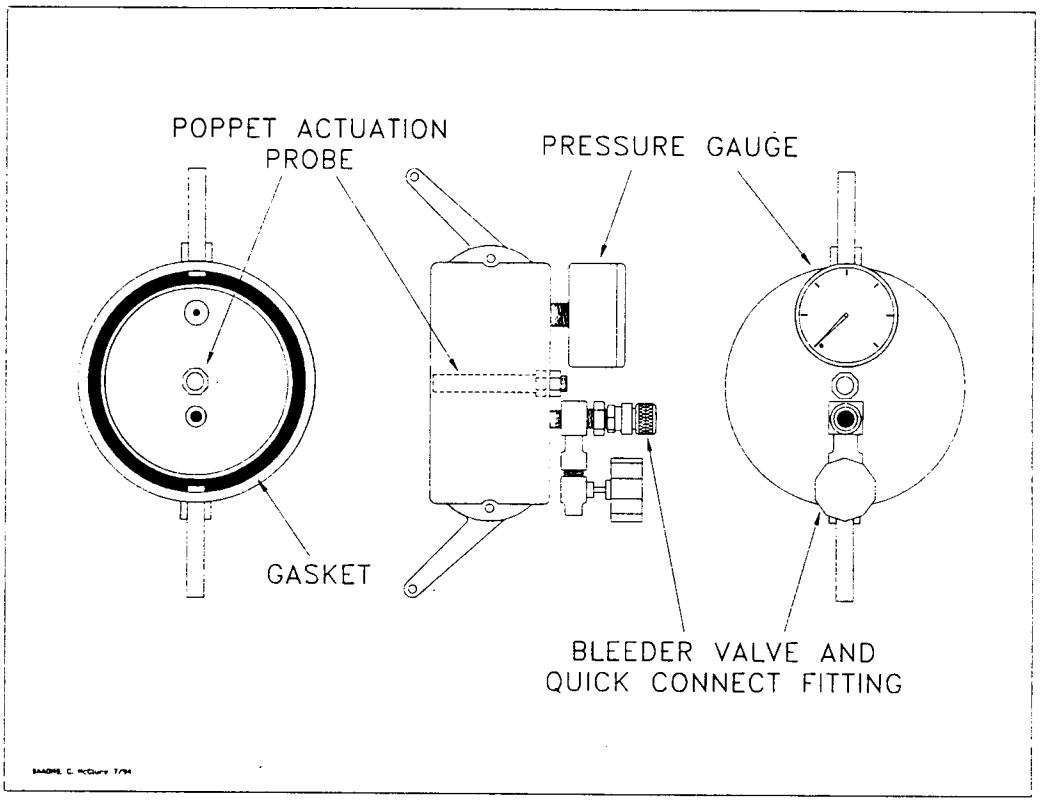

6. PRE-TEST PROCEDURES

6.1 The following safety precautions shall be followed:

6.1.1 Only nitrogen shall be used to pressurize the system.

6.1.2 A one psig relief valve shall be installed to prevent the possible over-pressurizing of the storage tank.

6.1.3 A ground strap should be employed during the introduction of nitrogen into the system.

6.2 Failure to adhere to any or all of the following time and activity restrictions shall invalidate the test results:

6.2.1 There shall be no Phase I bulk deliveries into or out of the storage tank(s) within three (3) hours prior to the test or during performance of this test procedure.

6.2.2 The headspace pressure in the tank shall be measured. If the pressure exceeds 0.50 inches H_2O, the pressure shall be carefully relieved in accordance with all applicable safety requirements. After a thirty minute period during which no product dispensing shall occur, and prior to the introduction of nitrogen, the headspace pressure shall again be lowered, if necessary, to less than 0.50 inches H_2O.

6.3 Measure the gallons of gasoline present in each underground storage tank and determine the actual capacity of each storage tank from facility records. Calculate the ullage space for each tank by subtracting the gasoline gallonage present from the actual tank capacity. The minimum ullage during the test shall be 25 percent of the tank capacity or 500 gallons, whichever is greater. The total ullage shall not exceed 25,000 gallons.

6.4 This test shall be conducted with the dust cap removed from the vapor coupler. This is necessary to determine the vapor tightness of the Phase I vapor poppet. See Section 6.7 if this test is to be conducted at the Phase I vapor coupler.

6.4.1 This section reserved for future use.

6.4.2 Verify that the liquid level in the storage tank is at least four (4) inches above the highest opening at the bottom of the submerged drop tube.

6.5 If the Phase I containment box is equipped with a drain valve, the valve assembly may be cleaned and lubricated prior to the test. This test shall, however, be conducted with the drain valve installed and the manhole cover removed. See subsection 7.4.1 for further details regarding containment box drain valves.

6.6 If the test is to be conducted at a Phase II vapor riser, disconnect the dispenser end of one vapor recovery hose and install the "T" connector assembly (see Figure 3-1). Connect the nitrogen gas supply (do not use air) and the pressure measuring device to the "T" connector.

6.6.1 For those Phase II systems utilizing a dispenser mounted remote vapor check valve, the "T" connector assembly shall be installed on the vapor riser side of the check valve.

6.7 If this test is to be conducted at the Phase I vapor coupler, the procedures set forth in subsections 6.7.1 and 6.7.2 shall be successfully completed prior to testing.

6.7.1 Connect the Vapor Coupler Integrity Assembly to the Phase I vapor coupler. Connect the Vapor Coupler Test Assembly. Connect the

nitrogen supply to the assembly and carefully pressurize the internal volume of the assembly to two (2.0) inches H_2O. Start the stopwatch. Record the final pressure after one minute.

6.7.2 If the pressure after one minute is less than 0.25 inches H_2O, the leak rate through the Phase I vapor poppet precludes conducting the static leak test at this location. If the pressure after one minute is greater than or equal to 0.25 inches H_2O, the static leak test may be conducted at this location. This criteria assures a maximum leak rate through the Phase I vapor poppet of less than 0.0004 cubic feet per minute.

6.7.3 Disconnect the Vapor Coupler Integrity Assembly from the Phase I vapor coupler. If the requirements of subsection 6.7.2 were met, connect the Vapor Coupler Test Assembly to the Phase I vapor coupler.

6.7.4 As an alternate to the requirements of subsections 6.7.1 through 6.7.3, leak detection solution may be used to verify the absence of vapor leaks through the Phase I vapor poppet. This alternative leak check is valid only for Phase I systems in which tanks are manifolded. The manifold may be at the vent pipes. Pressurize the system to two (2) inches H_2O and use the leak detection solution to verify a zero leak (absence of bubbles) condition at one of the vapor poppets on the Phase I system.

6.8 All pressure measuring device(s) shall be bench calibrated using either a reference gauge or incline manometer. Calibration shall be performed at 20, 50, and 80 percent of full scale. Accuracy shall be within two percent at each of these calibration points. Calibrations shall be conducted on a frequency not to exceed 90 days.

6.9 Use the flowmeter to determine the nitrogen regulator delivery pressures which correspond to nitrogen flowrates of 1.0 and 5.0 CFM. These pressures define the allowable range of delivery pressures acceptable for this test procedure. Also record the regulator delivery pressure setting, and the corresponding nitrogen flowrate that will be used during the test. As an alternative, the flowmeter may be connected, in-line between the nitrogen supply regulator and Vapor Coupler Test Assembly, during the test.

6.10 Use Equation 9.2 to calculate the approximate time required to pressurize the system ullage to the initial starting pressure of two (2.0) inches H_2O. This will allow the tester to minimize the quantity of nitrogen introduced into those systems which cannot comply with the static leak standards.

6.11 Attach the Vapor Coupler Test assembly to the Phase I poppet or the "T" connector assembly to the Phase II vapor riser. Read the initial pressure of the storage tank and underground piping. If the initial pressure is greater than 0.5 inches H_2O, carefully bleed off the pressure, in accordance with all applicable safety procedures, in the storage tank and underground piping to less than 0.5 inches H_2O column.

7. TESTING

7.1 Open the nitrogen gas supply valve and set the regulator delivery pressure within the allowable range determined in Section 6.9, and start the stopwatch. Pressurize the vapor system (or subsystem for individual vapor return line systems) to **at least 2.2 inches H_2O** initial pressure. It is critical to maintain the nitrogen flow until the pressure stabilizes, indicating temperature and vapor pressure stabilization in the tanks. Check the test equipment using leak detecting solution or a combustible gas detector to verify that all test equipment is leak tight.

7.1.1 If the time required to achieve the initial pressure of two (2.0) inches H_2O exceeds twice the time derived from Equation 9.2, stop the test and use liquid leak detector, or a combustible gas detector, to find the leak(s) in the system. Failure to achieve the initial starting pressure within twice the time derived from Equation 9.2 demonstrates the inability of the system to meet the performance criteria. Repair or replace the faulty component(s) and restart the test pursuant to Section 7.1.

7.2 Close and disconnect the nitrogen supply. Start the stopwatch when the pressure has decreased to the initial starting pressure of two (2.0) inches H_2O.

7.3 At one-minute intervals during the test, record the system pressure. After five minutes, record the final system pressure. Use Table 3-1 (or Equation 9-1) to determine the acceptability of the final system static pressure results. For intermediate values of ullage in Tables 3-1, linear interpolation may be employed.

7.4 If the system failed to meet the criteria set forth in Table 3-I (or Equation 9.1), repressurize the system and check all accessible vapor connections using leak detector solution or a combustible gas detector. If vapor leaks in the system are encountered, repair or replace the defective component and repeat the test. Potential sources of leaks include nozzle check valves, pressure/vacuum relief valves, containment box drain valve assemblies, and plumbing connections at the risers.

7.4.1 If the facility fails to comply with the static leak test standards and the Phase I system utilizes a non-CARB-certified drain valve equipped containment box, which was installed prior to July 1, 1992, for which a CARB-certified replacement drain valve assembly is not marketed, the following two subsections shall apply:

7.4.1.1 The drain valve may be removed and the port plugged. Reset the system. If the facility complies with the static leak test standards under these conditions, the facility shall be considered complying with the requirements, provided that the manufacturer and model number of the containment box and the date of installation are submitted with the test results.

7.4.1.2 The criteria set forth in subsection 7.4.1.1 shall not apply after July 1, 1996.

7.5 After the remaining system pressure has been relieved, remove the "T" connector assembly and reconnect the vapor recovery hose, if applicable.

7.6 If the vapor recovery system utilizes individual vapor return lines, repeat the leak test for each gasoline grade. Avoid leaving any vapor return line open longer than is necessary to install or remove the "T" connector assembly.

7.7 If the containment box has a cover-actuated drain valve, repeat the test with the cover in place. In these cases clearly specify, on Form 3-1, which results represent the pressure integrity with and without the cover in place.

8. POST-TEST PROCEDURES

8.1 Use the Table 3-1, or Equation 9.1, to determine the compliance status of the facility by comparing the final five-minute pressure with the minimum allowable final pressure.

9. CALCULATIONS

9.1 For Phase II Balance Systems, the minimum allowable five-minute final pressure, with an initial pressure of two (2.0) inches H_2O, shall be calculated as follows:

[Equation 9-1]

$$P_f = 2e^{\frac{-760.490}{V}} \quad \text{if N = 1-6}$$

$$P_f = 2e^{\frac{-792.196}{V}} \quad \text{if N = 7-12}$$

$$P_f = 2e^{\frac{-824.023}{V}} \quad \text{if N = 13-18}$$

$$P_f = 2e^{\frac{-855.974}{V}} \quad \text{if N = 19-24}$$

$$P_f = 2e^{\frac{-888.047}{V}} \quad \text{if N > 24}$$

Where:

N = The number of affected nozzles. For manifolded systems, N equals the total number of nozzles. For dedicated plumbing configurations, N equals the number of nozzles serviced by the tank being tested.

P_f = The minimum allowable five-minute final pressure, inches H_2O

V = The total ullage affected by the test, gallons

e = A dimensionless constant approximately equal to 2.718

2 = The initial starting pressure, inches H_2O

9.2 This section is reserved for future use.

9.3 The minimum time required to pressurize the system ullage from zero (0) to two (2.0) inches H_2O gauge pressure shall be calculated as follows:

$$t_2 = \frac{V}{[1522]F} \qquad \text{[Equation 9-3]}$$

Where:

t_2 = The minimum time to pressurize the ullage to two inches H_2O, minutes
V = The total ullage affected by the test, gallons
F = The nitrogen flowrate into the system, CFM
1522 = The conversion factor for pressure and gallons

9.4 If the policy of the local District requires an allowable tolerance for testing error, the minimum allowable five-minute final pressure, including testing error, shall be calculated as follows:

$$P_{f-E} = 2 - \left[1 + \left(\frac{E}{100}\right)\right]\left[408.9 - \left(P_f + 406.9\right)\right] \qquad \text{[Equation 9-4]}$$

Where:

P_{f-E} = The minimum allowable five-minute final pressure including allowable testing error, inches H_2O
E = The allowable testing error, percent
P_f = The minimum allowable five-minute final pressure calculated in Equations 9-1 or 9-2, inches H_2O
2 = The initial starting pressure, inches H_2O
408.9 = Atmospheric pressure plus the initial starting pressure, inches H_2O
406.9 = Atmospheric pressure, inches H_2O

10. REPORTING

10.1 The calculated ullage and system pressures for each five-minute vapor recovery system test shall be reported as shown in Form 3-1. Be sure to include the Phase I system type (two-point or coaxial), the Phase II system type, whether the system is manifolded, and the one-minute pressures during the test.

Executive Order G-70-23-AC, Exhibit 3

TABLE 3-1

PRESSURE DECAY LEAK RATE CRITERIA

INITIAL PRESSURE OF 2 INCHES OF H_2O

MINIMUM PRESSURE AFTER 5 MINUTES, INCHES OF H_2O

ULLAGE, GALLONS	NUMBER OF AFFECTED NOZZLES 01-06	07-12	13-18	19-24	> 24
500	**0.44**	**0.41**	**0.38**	**0.36**	**0.34**
550	0.50	0.47	0.45	0.42	0.40
600	**0.56**	**0.53**	**0.51**	**0.48**	**0.46**
650	0.62	0.59	0.56	0.54	0.51
700	**0.67**	**0.64**	**0.62**	**0.59**	**0.56**
750	0.73	0.70	0.67	0.64	0.61
800	**0.77**	**0.74**	**0.71**	**0.69**	**0.66**
850	0.82	0.79	0.76	0.73	0.70
900	**0.86**	**0.83**	**0.80**	**0.77**	**0.75**
950	0.90	0.87	0.84	0.81	0.79
1,000	**0.93**	**0.91**	**0.88**	**0.85**	**0.82**
1,200	1.06	1.03	1.01	0.98	0.95
1,400	**1.16**	**1.14**	**1.11**	**1.09**	**1.06**
1,600	1.24	1.22	1.19	1.17	1.15
1,800	**1.31**	**1.29**	**1.27**	**1.24**	**1.22**
2,000	1.37	1.35	1.32	1.30	1.28
2,200	**1.42**	**1.40**	**1.38**	**1.36**	**1.34**
2,400	1.46	1.44	1.42	1.40	1.38
2,600	**1.49**	**1.47**	**1.46**	**1.44**	**1.42**
2,800	1.52	1.51	1.49	1.47	1.46
3,000	**1.55**	**1.54**	**1.52**	**1.50**	**1.49**
3,500	1.61	1.59	1.58	1.57	1.55
4,000	**1.65**	**1.64**	**1.63**	**1.61**	**1.60**
4,500	1.69	1.68	1.67	1.65	1.64
5,000	**1.72**	**1.71**	**1.70**	**1.69**	**1.67**
6,000	1.76	1.75	1.74	1.73	1.72
7,000	**1.79**	**1.79**	**1.78**	**1.77**	**1.76**
8,000	1.82	1.81	1.80	1.80	1.79
9,000	**1.84**	**1.83**	**1.83**	**1.82**	**1.81**
10,000	1.85	1.85	1.84	1.84	1.83
15,000	**1.90**	**1.90**	**1.89**	**1.89**	**1.89**
20,000	1.93	1.92	1.92	1.92	1.91
25,000	**1.94**	**1.94**	**1.94**	**1.93**	**1.93**

Note: For manifolded Phase II Balance Systems, the **"Number of Affected Nozzles"** shall be the total of all gasoline nozzles. For dedicated return configurations, the **"Number of Affected Nozzles"** shall be the total of those nozzles served by the tank being tested.

Form 3-1

Distribution:	BAY AREA AIR QUALITY MANAGEMENT DISTRICT *939 Ellis Street* *San Francisco, California 94109* *(415) 771-6000* **Summary of Source Test Results**	Report No.: _____ Test Date: _____ Test Times: Run A: _____ Run B: _____ Run C: _____
Firm Permit Services Enforcement Services Technical Services Planning Requester DAPCO		

Source Information		Facility Parameters
GDF Name and Address	GDF Representative and Title	PHASE II SYSTEM TYPE (Check One)
		Balance ☐
		Vapor Assist ☐
	GDF Phone No. ( )	Type:
	Source: GDF Vapor Recovery System	Other ☐
Permit Conditions	BAAQMD GDF # _____	Identify:
	BAAQMD A/C # _____	Manifolded? Y or N

Operating Parameters:

Number of Nozzles Served by Tank #1	_____	Number of Nozzles Served by Tank #3	_____
Number of Nozzles Served by Tank #2	_____	Total Number of Gas Nozzles at Facility	_____

Applicable Regulations: BAAQMD REGULATION 8, RULE 7

FOR OFFICE USE ONLY:

Source Test Results and Comments:

TANK #:	1	2	3	TOTAL
1. Product Grade				
2. Actual Tank Capacity, gallons				
3. Gasoline Volume, Gallons				
4. Ullage, gallons (#2 -#3)				
5. Phase I System Type				
6. Initial Test Pressure, Inches H_2O **(2.0)**				
7. Pressure After 1 Minute, Inches H_2O				
8. Pressure After 2 Minutes, Inches H_2O				
9. Pressure After 3 Minutes, Inches H_2O				
10. Pressure After 4 Minutes, Inches H_2O				
11. **Final Pressure After 5 Minutes, Inches H_2O**				
12. Allowable Final Pressure from Table 3-I				
13. Test Status **[Pass or Fail]**				

Test Conducted by:	Test Company Name _____ Address _____ City _____	Date and Time of Test:

Executive Order G-70-23-AC

Exhibit 4

GASOLINE DISPENSING FACILITY DYNAMIC BACK PRESSURE *

1. APPLICABILITY

1.1 This procedure is used to verify compliance with the applicable dynamic back pressure limits imposed on the Phase II vapor recovery system. The applicability of the following Alternate Methods is dependent upon the regulatory requirements which apply to the particular configuration in the facility.

1.1.1 **Alternate Method 1**. This procedure is applicable if the remote vapor check valves are not part of the Phase II system.

1.1.2 **Alternate Method 2 &** 3. These procedures are applicable if a remote vapor check is installed as part of the Phase II system.

1.2 Testing for all Methods shall be conducted with the Phase I vapor poppet **open**.

1.3 Other Alternate Methods may be used provided that written approval has been granted by the CARB Executive Officer. Such approval shall be based upon demonstrated equivalency of any proposed methodology.

2. PRINCIPLE

2.1 The dynamic back pressure during vehicle fueling is simulated by passing nitrogen through the Phase II recovery system at specified rates. The resultant dynamic back pressure is measured using a pressure gauge, or equivalent device. Alternate Methods 2 and 3 are included for those Phase II systems that utilize both bellows-equipped nozzles and a remote vapor check valve.

3. RANGE

3.1 The minimum and maximum dynamic back pressures that can be measured are dependent upon available pressure gauges. Recommended gauge ranges are as follows:

3.1.1 **Alternate Methods 1 and** 3. 0-0.5 and 0-2 inches H_20.

3.1.2 **Alternate Method 2**. 0-0.5 and 0-1 inches H_2O.

3.2 If mechanical pressure gauges are employed, the minimum diameter of the gauge face shall be four inches, and the minimum accuracy of the gauge shall be three percent of full scale.

3.3 If an electronic pressure measuring device is used, the full-scale range of the device shall not exceed 0-10 inches H_2O with a minimum accuracy of 0.5 percent of full scale. A 0-20 inches H_2O device may be used provided that the equivalent accuracy is not less than 0.25 percent of full-scale.

* Reference Bay Area Air Quality Management District Source Test Procedure ST-27

4. INTERFERENCES

4.1 Any leaks in the nozzle vapor path, vapor hose, or underground vapor return piping may result in erroneously low dynamic back pressure measurements.

5. APPARATUS

5.1 Nitrogen High Pressure Cylinder with Pressure Regulator. Use a high pressure nitrogen cylinder capable of maintaining a pressure of at least 2000 psig and equipped with a compatible two-stage pressure regulator and a one psig relief valve. A ground strap is recommended during introduction of nitrogen into the system.

5.2 Rotameter. Use a calibrated rotameter capable of accurately measuring nitrogen flowrate(s) applicable for the imposed dynamic back pressure limits.

Figure 4-1

Dynamic Back Pressure Test Assembly

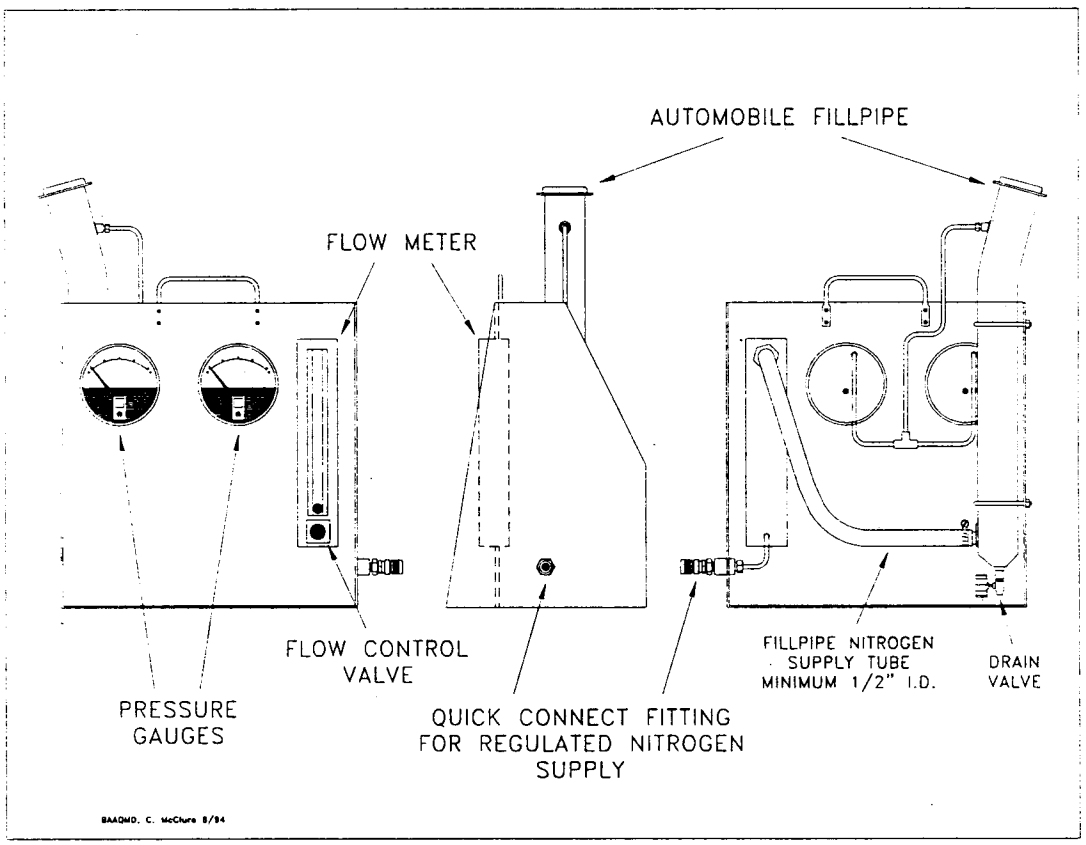

5.3 Pressure Gauges. Use differential pressure gauges, or equivalent, as specified in the applicable subsection of Section 3.1.

5.4 Automobile fillpipe. Use a automobile fillpipe, if applicable, known to be compatible with all bellows-equipped vapor recovery nozzles, and equipped with a pressure tap. See Figure 4-1.

5.5 Nitrogen. Use commercial grade nitrogen.

5.6 Hand Pump. Use a gasoline compatible hand pump, if applicable, to drain any gasoline from condensate pots.

Figure 4-2

Dynamic Pressure Release Assembly

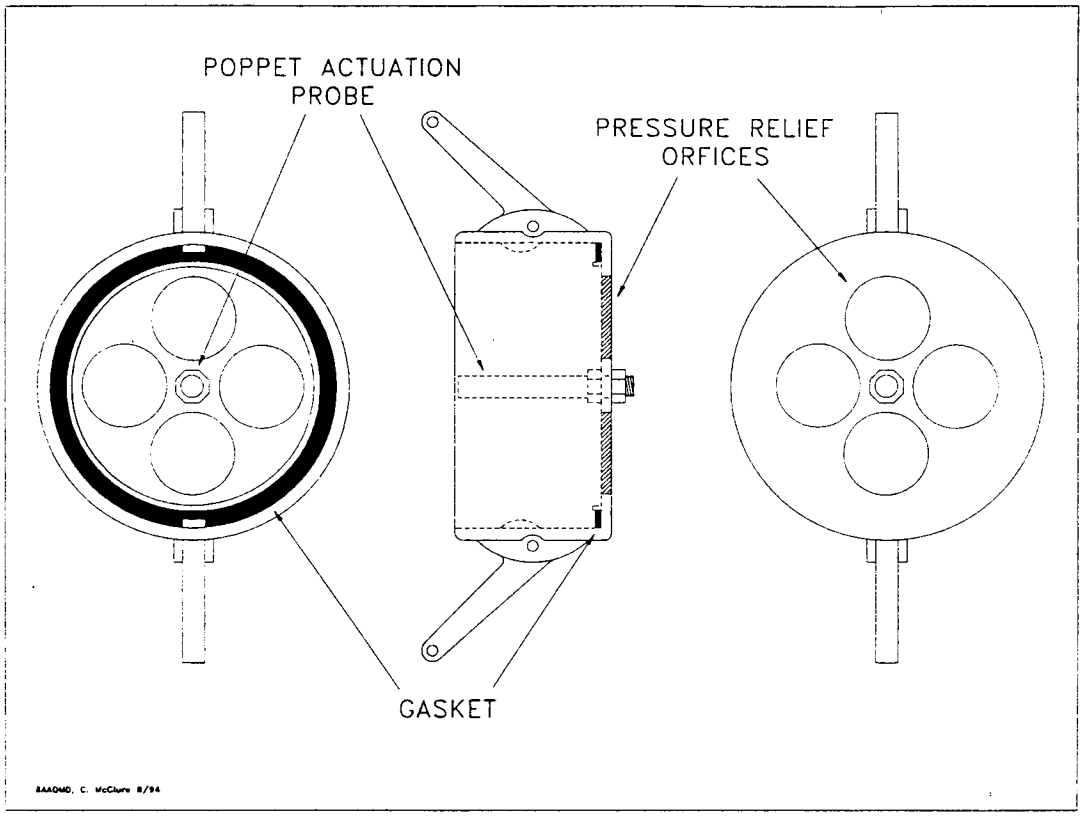

TESTING

7.1 Alternate Method 1. Insert the nozzle into the fillpipe of the Dynamic Back Pressure Test Unit, ensuring that a tight seal at the fillpipe/nozzle interface is achieved.

7.1.1 Connect the nitrogen supply to the test assembly.

7.1.2 Open the nitrogen supply, set the delivery pressure to 5 psig, and use the flowmeter control valve to adjust the flowrate to lowest of the required nitrogen flowrates.

7.1.3 A pulsating gauge needle indicates nitrogen passing through a liquid obstruction in the vapor return system. If this occurs, close the flow meter control valve, disengage the nozzle and redrain the nozzle and hose assembly. Re-engage the nozzle, open the flow meter control valve and repeat the test.

7.1.4 The following information shall be recorded on the field data sheet, as shown in Form 4-1:

(a) Pump Number and Product Grade
(b) Nozzle make and model
(c) Nitrogen flowrate, CFH
(d) Dynamic back pressure, inches H_2O

7.1.5 Repeat subsections 7.1.1 through 7.1.4 for all required nitrogen flowrates.

7.1.6 Close and replace the dust cover on the Phase I poppet.

7.2 Alternate Method 2. Phase II systems which utilize both bellows-equipped nozzles and a fuel-activated remote vapor check valve may be tested using the following methodology.

7.2.1 Disconnect the vapor recovery hose from the remote vapor check valve. Test the nozzle/hose assembly pursuant to Section 7.1.1 through 7.1.4, and record the results on the field data sheet as shown in Form 4-2.

7.2.2 Disconnect the vapor check valve from the riser and connect a compatible "T" fitting to the riser as shown in Figure 4-3.

Figure 4-3

Capped "T" Assembly

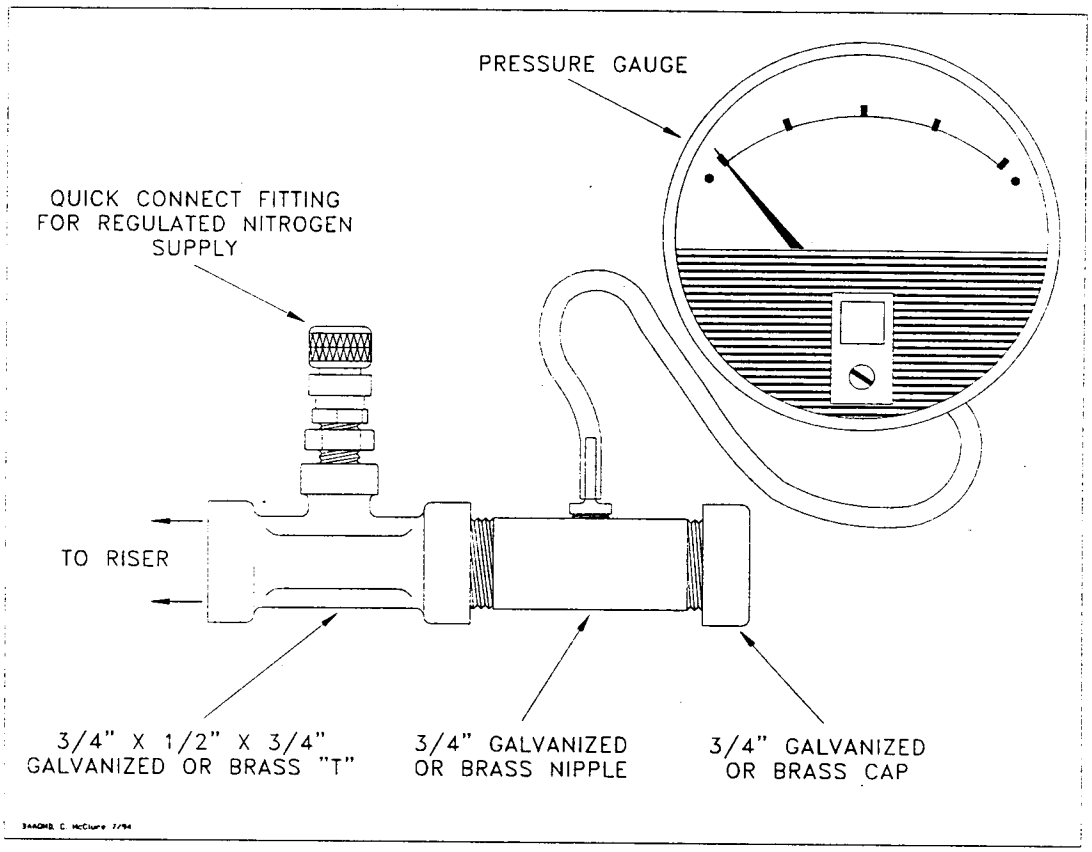

7.2.3 Connect the nitrogen supply to the "T" assembly.

7.2.4 Repeat Sections 7.1.2 through 7.1.4. In addition to the information required in Section 7.1.4, record both the make and model of the remote vapor check valve.

7.2.5 Record on the field data sheet the pressure drop across the remote vapor check valve. This data is available from the manufacturer.

7.2.6 Add the dynamic back pressures, for each required nitrogen flowrate, obtained from Sections 7.2.1, 7.2.4 and 7.2.5 as shown in Form 4-2.

7.3 Alternate Method 3. Phase II systems which use both bellows-equipped nozzles and those models of fuel-activated remote vapor check valves which can be disabled by removing the poppet on the fuel side may be tested using the following methodology. Phase II systems using an Emco-Wheaton A-228 remote vapor check valve **cannot** be tested using this method.

7.3.1 Carefully open the fuel side of the remote vapor check valve and remove the fuel poppet. Carefully replace the threaded plug on the fuel side of the valve.

7.3.2 Test the Phase II system pursuant to Sections 7.1.1 through 7.1.5, recording the data on the field data sheet shown in Form 4-1.

7.3.3 Carefully reassemble the remote vapor check valve by removing the plug on the fuel side and reinserting the fuel poppet. Replace the threaded fuel plug, taking care not to strip the threads.

8. REPORTING

8.1 Results of the dynamic back pressure test shall be reported as shown below:

8.1.1	Alternate Method 1	Use Form 4-1
8.1.2	Alternate Method 2	Use Form 4-2
8.1.3	Alternate Method 3	Use Form 4-1

Form 4-1

Distribution:	Executive Order G-70-23-AC Exhibit 4 Summary of Source Test Results	Report No.: _____ Test Date: _____ Test Times: Run A: _____

Source Information		Regulatory Representatives
Firm Name and Address	Firm Representative and Title Phone No. ( )	Test Engineers
Permit Conditions:	Source: **GDF Vapor Recovery** **GDF #** _____ **A/C #** _____	Permit Services Division/Enforcement Division Test Requested By:
Operating Parameters:		
Applicable Regulations:		VN Recommended:

Sources Test Results and Comments:

Nozzle #	Gas Grade	Nozzle Model	Dynamic Back Pressure, Inches H_20		
			CFH	CFH	CFH

Results Received by	Date	Results Reviewed by	Date	Results Approved/Disapproved

Form 4-2

Firm Name and Address	Executive Order G-70-23-AC Exhibit 4	GDF Representative and Title Phone No. ( )
Permit Services/Enforcement:		Test Performed by:
Permit Conditions:	Summary of Source Test Results	Test Date/Time:
Applicable Regulations:	Source: GDF Vapor Recovery GDF # A/C #	VN Recommendation:

Source Test Results and Comments:

Pump #	Gas Grade	Nozzle Model	Vapor Valve Make/Model	Nitrogen Flow, CFH	Dynamic Back Pressure, Inches of Water Column: Nozzle/Hose Assembly	Riser to U.G. Tank	Vapor Valve	Total Δ P, Inches H_2O

Test Received by:	Date:	Test Reviewed by:	Date:	Test Approved/Disapproved:	Date:

Executive Order G-70-23-AC

Exhibit 5

TEN GALLON PER MINUTE LIMITATION COMPLIANCE VERIFICATION PROCEDURE

Compliance with the 10 gallon per minute flowrate limitation shall be determined with the following methodology. It is recommended that the maximum dispensing rate through each nozzle/hose assembly be verified.

1) The facility uses identical models of hoses, nozzles, and breakaways:

Check the nozzle closest to the submersible turbine pump (STP) for each gas grade, or STP, at the facility. With no other dispensing occurring which uses the same STP, dispense gas into a vehicle or approved container. Dispensing shall be conducted in the "hand-held, wide-open" mode. Using a stopwatch accurate to at least 0.2 seconds, begin timing the dispensing rate after at least one gallon has been dispensed. This one gallon buffer is necessary due to the "slow-start" nature of some dispensers. Determine the time required to dispense 2, 3, 4, or 5 gallons of gasoline. The facility shall be deemed in compliance with the 10 gallon per minute limitations if the elapsed time meets, or exceeds, the times shown in Table 1. If the dispensing rate exceeds the allowable limit, a CARB-certified flow limiting device shall be installed.

2) The facility uses different models of hoses, nozzles, or breakaways

Due to potential differences in pressure drops through the various components, each of the nozzle/hose assemblies shall be tested for maximum dispensing rates. Using the same criteria as above, determine the maximum dispensing rate through each nozzle/hose assembly. If the maximum dispensing rate exceeds the 10 gpm limit, a CARB-certified flow limiting device shall be installed.

Table 1
Verification of 10 gpm

Product Dispensed, gallons	Minimum Allowable Time, seconds
2.0	11.8
3.0	17.7
4.0	23.6
5.0	29.5

Note: The times have been corrected to allow for the accuracy of the measurement.